Bundle of documents for Oral hearings commencing from 19 August 2024 in relation to the Queen Elizabeth University Hospital and the Royal Hospital for Children, Glasgow

Bundle 23 – Queen Elizabeth University Hospital and Royal Hospital for Children, Isolation Rooms

This document may contain Protected Material within the terms of Restriction Order 1 made by the Chair of the Scottish Hospitals Inquiry and dated 26 August 2021. Anyone in receipt of this document should familiarise themselves with the terms of that Restriction Order as regards the use that may be made of this material.

The terms of that Restriction Order are published on the Inquiry website.

SCOTTISH HOSPITALS INQUIRY

Table of Contents

1	A35772438	1:500 Tender Plan Level 5 - 6 July 2009	Page 11
2	A32962483	NSGH Client Familiarisation Building (undated)	Page 12
3	A35773999	NA-xx-04-PL-252-000; Fourth Floor Department Layout (1:200)	Page 33
4	A35184837	Rheumatology Clinical Output Specification	Page 34
5	A35761885	ENT Audiology Clinical Output Specification	Page 41
6	A36372543	Meeting invite with D Ramsay, S McKechnie, I Powrie, D Ross, D, Wilson, D Loudon regarding clinician isolation room concerns - 31 May 2016	Page 46
7	A36372525	A13 – Clarification issued to bidders re' (undated)	Page 49
8	A35773717	1:200 Tender Plan Level 5 – Atrium and lift core - 2 September 2009	Page 50
9	A33501458	20140609 Fifth Floor Plan - 9 June 2014	Page 51
10	A49413350	Tower Room Data - WW Comments 20130725 - Excerpt of A47946602 edited for relevant information	Page 52
11	A36939897	ZBP Engineering Services Specification - August 2012	Page 60
12	A33010783	SHTM 03-01 (2009)	Page 131
13	A38030075	Email between M Lockhart, A Rankin, G Geraldine, M Lockhart regarding QEUH Ward 4B Haemato - oncology - 25 November 2015	Page 181
14	A48375995	Email from P Hoffman's email to T Inkster Regarding Isolation Room Ventilation - 9 November 2012	Page 194

15	A32375944	Letter from T Inkster and C Peters to D Stewart - 9 November 2015	Page 195
16	A40241907	Email chain between Prof C Williams, J Hood, and Dr C Peters regarding transplant ventilation - 19 June to 1 July 2015	Page 199
17	A49073232	Email chain from B Jones to T Inkster - 13 August 2015	Page 201
18	A38029602	SBAR – Adult Bone Marrow Transplant – DRAFT – Version 2 - 2 December 2015	Page 202
19	A36372634	Project Manager Instruction 471 – Ward 4B / Haemato -Oncology Ward - Alteration to board requirements	Page 213
20	A38030914	Email chain between A Rankin, P Hoffman regarding BMT SBAR - 26 October 2017	Page 214
21	A49413351	Ward 2A Room Data Sheets - Excerpt of A38110665 edited for relevant information with highlight added for emphasis	Page 216
22	A40241476	Email chain between T Inkster, J Armstrong, M McColgan, and S Russell regarding Ward 4B alteration proposal - 25 April to 4 May 2016	Page 220
23	A46157915	Email from C Peters to T Inkster re Infection control handover - 25 July 2016	Page 223
24	A40241439	Email chain between D Loudon, M McColgan, and A Parker regarding Ward 4B alteration proposal - 23 to 30 June 2016	Page 229
25	A39465091	Bone Marrow Transplant (BMT) Unit – Feasibility Study carried out by Currie & Brown - 28 November 2016	Page 231
26	A38759255	SBAR re Infection Control and Patient Safety - 3 October 2017	Page 278
27	A46157857	Email from T Inkster to C Peters re SBAR Action Plan – Latest version - 24 September 2019	Page 283
28	A38759230	Clinical Care and Governance Paper - 8 June 2021	Page 299
29	A35761814	Critical Care Clinical Output Specification	Page 313

30	A35185320	Adult Isolation Rooms requirements	Page 328
31	A39465126	SBAR Isolation Rooms Critical Care, Dr T Inkster - May 2016	Page 329
32	A49073358	Email chain from B Jones to C Peters – RE Negative pressure rooms in QEUH - 31 August 2015	Page 331
33	A46191398	Email from D Bell to C Peters and others re MERS patient - 7 October 2015	Page 333
34	A40241808	Email from C Peters to T Walsh and others – Meeting re Ventilation - 25 June 2015.	Page 335
35	A49073341	Email chain from E Peters to C Peters – High Risk airborne infections - 22 July 2015	Page 337
36	A32954762	122 - AHU 04 SUPPLY (4TH TO 7TH FLOOR)	Page 341
37	A32954806	122 - AHU 04 DIRTY EXTRACT (4TH TO 7TH FLOOR)	Page 355
38	A32954760	122 - AHU 05 SUPPLY (4TH TO 7TH FLOOR WARDS) REPORT	Page 369
39	A32954763	122 - AHU 05 DIRTY EXTRACT (4TH TO 7TH FLOOR WARDS) REPORT	Page 384
40	A32954766	122 - AHU 06 SUPPLY (4TH TO 7TH FLOOR WARDS) REPORT (AWAITING SCHEMS)	Page 398
41	A32954768	122 - AHU 06 CLEAN EXTRACT (4TH TO 7TH FLOOR)	Page 412
42	A32954556	121 - AHU 04 SUPPLY (5TH TO 7TH FLOOR WARDS)	Page 426
43	A32954552	121 - AHU 04 EXTRACT (5TH & 7TH FLOOR WARDS)	Page 439
44	A32954535	121 - AHU 05 SUPPLY (5TH TO 7TH FLOOR WARDS)	Page 450
45	A32954557	121 - AHU 05 EXTRACT (5TH & 7TH FLOOR WARDS)	Page 463
46	A32954527	121 - AHU 06 SUPPLY REPORT	Page 475

47	A32954532	121 - AHU 06 EXTRACT REPORT	Page 489
48	A32955621	124 - 7EF02 (LEVELS 4,5,6 & 7) REPORT	Page 503
49	A32955593	124 - AHU 04 SUPPLY REPORT	Page 516
50	A32955592	124 - AHU 04 DIRTY EXTRACT REPORT	Page 531
51	A32955598	124 - AHU 05 DIRTY EXTRACT REPORT	Page 545
52	A32955606	124 - AHU 06 SUPPLY REPORT	Page 559
53	A32955608	124 - AHU 06 CLEAN EXTRACT REPORT	Page 573
54	A32955085	123 - AHU 04 SUPPLY (4TH TO 7TH FLOOR WARDS) REPORT	Page 587
55	A32955093	123 - AHU 04 DIRTY EXTRACT (4TH TO 7TH FLOOR WARDS) REPORT	Page 602
56	A32955082	123 - AHU 05 SUPPLY (4TH TO 7TH FLOOR WARDS)	Page 616
57	A32955079	123 - AHU 05 DIRTY EXTRACT (4TH TO 7TH FLOOR WARDS)	Page 628
58	A32955112	123 - AHU 06 SUPPLY (4TH TO 7TH FLOOR WARDS)	Page 638
59	A32955119	123 - AHU 06 EXTRACT (4TH TO 7TH FLOOR WARDS) REPORT	Page 652
60	A36372655	Compensation Event issued by the Deputy Project Director to Brookfield on October 2013 for inclusion of HEPA in level 4 zones 512, 513, and 514 - 2 October 2013	Page 666
61	A36372554	Briefing Note on Design of BMT unit - 9 July 2015	Page 668
62	A48090552	GGC response to RFI - 20 March 2024	Page 671
63	A40247585	SMT Minutes - 25 February 2015	Page 676

64	A32310953	SBARs; Air changes, Isolation rooms, Air sampling, Airborne infection, Endoscopy facilities, ward 4C, Ward 6A environment	Page 685
65	A38759222	SBAR – Multiple Wards – Action Plan - January 2019	Page 702
66	A39465105	Email between P Hoffman, A Rankin, T Inkster, C Williams regarding BMT SBAR 2015 dated 21 December 2015	Page 715
67	A44943548	01 Physical changes Ward 4B	Page 718
68	A41686378	QEUH Ward 4B Ceiling Works	Page 720
69	A38029704	QEUH – Adults Ward 4B rev1 – November 2017	Page 721
70	A46157878	Email from C Peters to A Wallace and others re Current Issues – 19 May 2020	Page 747
71	A34324094	Childrens Isolation Room HEPA filter integrity test report - 7 June 2015	Page 751
72	A34323069	Capita - Air Permeability Tests - 2 September 2015	Page 754
73	A34465854	Email between G Armstrong, P Moir, S Borland regarding Isolation room test - 28 August 2015	Page 756
74	A34467041	Email Between D Wilson, D Loudon regarding NSGH A&C issues - 20 August 2015	Page 758
75	A34465945	Email from D Loudon to A Fernie, J Armstrong, G Archibald, C Williams regarding Schiehallion ward - 1 September 2015	Page 760
76	A34465774	Email chain between I McKenzie, J Miller, A Fernie, W Hunter, D Loudon regarding Schiellion Ward - 1 to 3 September 2015	Page 762
77	A41683176	BMT REPORT - V3 - 25 February 2016	Page 768
78	A33642636	Letter from Currie & Brown to D Loudon regarding Isolation Rooms - 15 March 2016	Page 776
79	A33642587	Ref Doc DJR_13b enclosures with letter to Currie and Brown from D Loudon - 1 March 2016	Page 777

80	A41602358	BMT Cubicles Minutes - 22 September 2016	Page 784
81	A41602399	Hulley & Kirkwood Isolation Room Review - QEUH and RHC Isolation Rooms Review Rev1	Page 786
82	A41602356	Hulley & Kirkwood Isolation Room Review - QEUH and RHC Isolation Rooms Review Rev1 - Appendix A	Page 799
83	A41602401	Tender Issue - Ward 2A Isolation Room Ventilation Specifications - 30 May 2017 FINAL	Page 800
84	A44943477	S.21 response from GGC July 2023, '05 a) and c) Isolation Rooms RHC'	Page 834
85	A41601693	RFI 10 Chronology RFI 10 Final Draft response 1.1 - 1.7 - 25 November 2022	Page 839
86	A41602373	Construction Works Programme Isolation Room Ventilation Works - RHC Ward 2 Glasgow CONSTRUCTION ISSUE	Page 845
87	A41602393	H&V Commissioning & Validation Childrens 2A - Room 17 Isolation Rev1 - 14 March 2018	Page 846
88	A41602350	SBAR - Environmental/Ventilation Monitoring - Ward 2B - January 2018	Page 868
89	A41602105	Jim Leiper Report - 2A Ventilation Findings - JL Comment Ver Final - 01 January 2018	Page 872
90	A41602083	Ward 2A and 2B Project Board Report - 07 March 2022	Page 901
91	A35773467	Tender 1:200, First floor plan NCH Critical Care (PICU) / Cardiology Ward/ Support - 2 September 2009	Page 903
92	A35184890	NSGACL Schedule of Accommodation NCH_iss1_rev - April 2009	Page 904
93	A33017230	Developed Design 1:200, First floor plan NCH Critical Care (PICU) / Cardiology Ward/ Support/ MDU and Special Feeds, Approved Level B - 15 October 2010	Page 944
94	A40165237	SHPN 04 Supp 1 v1 2008	Page 945

95	A34121423	Meeting invite with D Ramsay, S McKechnie, I Powrie, D Ross, D, Wilson, D Loudon re QEUH isolation room - 31 May 2016	Page 980
95.1		160531 QEUH Isolation Rooms Meet Agenda	Page 981
95.2		21 - AHU 16 SUPPLY ISOLATION ROOM REPORT with schem	Page 982
95.3		41 - 16-EF01 (1ST FLOOR ISOLATION) REPORT	Page 988
95.4		HFS Isolation room status	Page 994
95.5		ZBP-XX-XX-SC-524-871	Page 995
96	A46059364	NHSGGC response to RFI ‘05 a) & c) Isolation Rooms RHC updated	Page 996
97	A44943356	S.21 response from GGC regarding Validation	Page 1001
98	A41602403	RHC Ward 2A Isolation Rooms Tender - May 2017	Page 1002
99	A32310958	Infection Control letter to T Inkster - 5 May 2016	Page 1016
100	A48800307	Email chain between Dr T Inkster, J Redfern and others regarding Sealing of Suites in Children's Ward 2A - 9 September to 23 October 2015	Page 1018
101	A48375992	Email from J Stewart to S McNamee Regarding isolation Rooms - 14 November 2012	Page 1036
102	A45529919	Ward 2A Room Data Sheets	Page 1037
103	A49377179	Email from C Peters, T Inkster, I Powrie regarding PPVL rooms workshop and meeting - 21 to 27 February 2018	Page 1039
104	A49377176	Email from T Inkster consenting to conversion of PPVL Isolation Suite to Negative Pressure - 24 April 2018	Page 1041
105	A49377178	Emails between T Mills, A Traquair Smith, Regarding Isolation Rooms - Phase 1 Handover - 29 October to 5 November 2018	Page 1042

106	A49377174	Email between T Mills A Traquair Smith, T Inkster regarding Isolation Rooms - Phase 1 Handover - 9 to 13 November 2018	Page 1046
107	A49377175	Email from S Dodds to T Inkster regarding Negative pressure rooms and concerns relating to other lobbied rooms on QEUH RHC site - 5 December 2018	Page 1050
108	A49377180	Emails between S Russell, I Powrie, A Wilson, A Gallacher, D Conner regarding isolation rooms - Commissioning delay - 28 November to 4 December 2018	Page 1052
109	A49377177	Emails between T Inkster and D Conner regarding Isolation room verification reports - 23 May to 26 August 2019	Page 1059
110	A49378412	Meeting to discuss BMT Unit RHC - 7 September 2015	Page 1063
111	A49378413	Emails between P Moir, C Williams, J Redfern, I Powrie, D louden regarding Schiehallion BMT Suite - 25 to 31 August 2015	Page 1069
112	A49378415	Emails between I Powrie, C Williams, D Loudon regarding Paediatric BMT- 26 to 28 August 2015	Page 1074
113	A49378414	Email Chain between P Joannidis, J Kirkwood, S Leighton, A McVeigh, T Inkster, B Lavery regarding Schiehallion testing - 2 to 6 July 2015	Page 1076
114	A48652586	RHSC BMT Meeting - 10 August 2015	Page 1087
115	A49386768	Email chain between C Williams, J Brown, S McNamee, F McCluskey regarding Highly Infectious patents in the NSGH and other issues - 11 to 12 August 2014	Page 1088
116	A49386767	Email chain regarding Lobbied rooms in NSGH - 22 December 2014 to 14 January 2015	Page 1092
117	A49386769	Emails between F McCluskey, S McNamee, C Williams regarding Highly Infectious patients in the NSGH and other issues - 11 August 2014	Page 1100

118	A49386766	Emails between F McCluskey and C Williams regarding Lobbied rooms in NSGH - 20 August 2014	Page 1104
119	A49387011	Email from P Moir to G Jenkins regarding Haemato-Oncology - Level 4 Ward B works - 29 July 2015	Page 1106
120	A49387013	BMT Original Specification - Gartnavel site - Dr John Hood	Page 1108
121	A49387012	Emails between T Inkster and C Williams regarding BMT - 10 to 11 November 2015	Page 1110
122	A49387376	Email from C Williams to J Armstrong regarding BMT unit - 5 June 2015	Page 1112
123	A49387498	Email from H Griffin to A Seabourne, P Moir, B Cowan regarding Isolation rooms, MDU and Renal Dialysis - 25 May 2009	Page 1113
124	A41683154	Letter from A Parker, G McQuaker, D Irvine, I Novitzky-Basso, A Clark regarding BMT return to QEUH	Page 1116
125	A49388147	Emails between Dr T Inkster, D Loudon, M McColgan and J Armstrong - 15 to 16 June 2016	Page 1117
126	A49388148	Timetable of events in relation to adult BMT unit - Dr T Inkster	Page 1120
127	A49392066	Email chain between F McCluskey and P Joannidis about lobbied isolation rooms - dated 3 July 2014	Page 1122
128	A49393871	SBAR - Timeline re correspondence regarding the move of the ID unit to the QEUH - dated 26 April 2016	Page 1127

NHS Greater Glasgow and Clyde

Brookfield

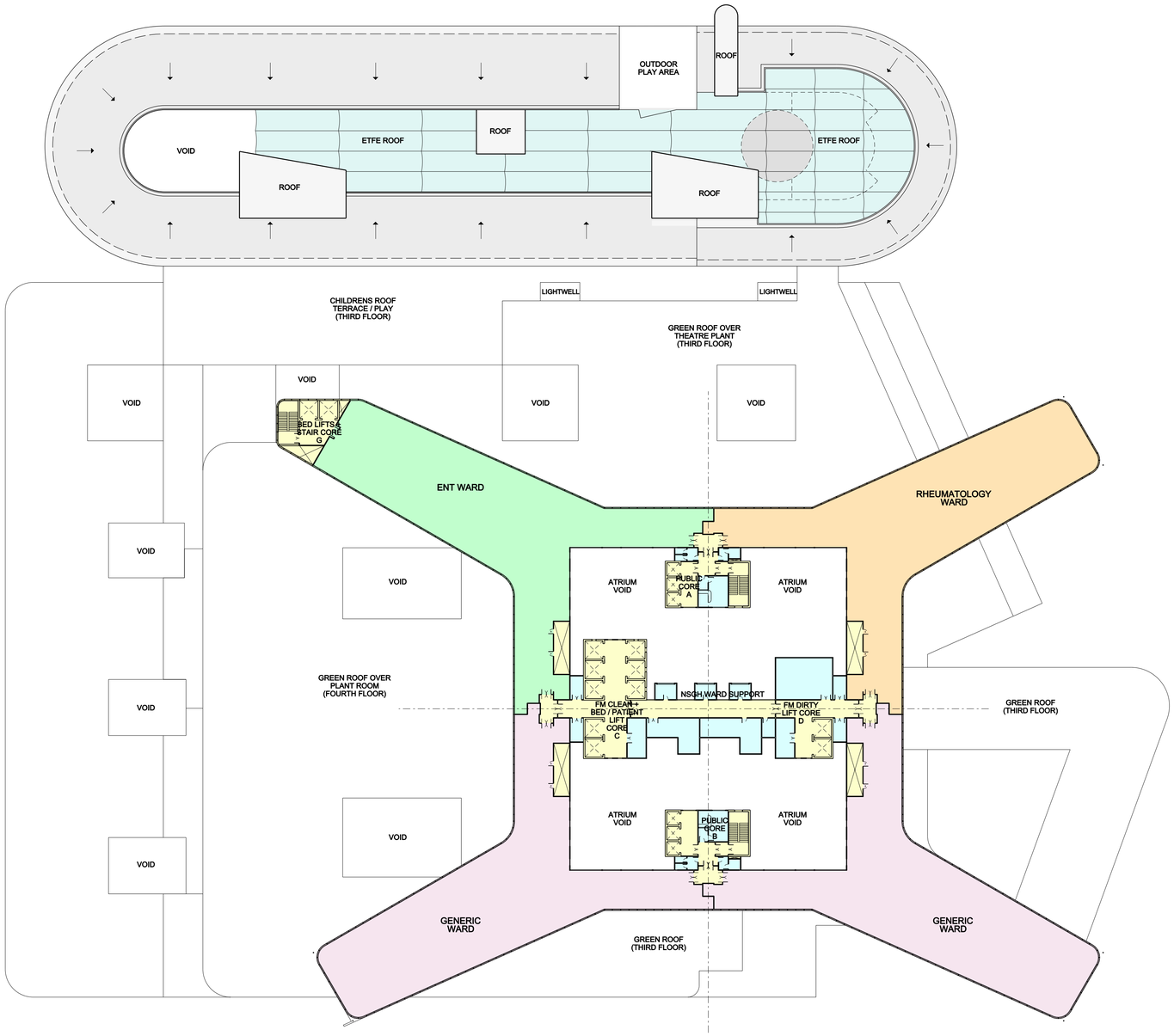
OUTDOOR PLAY AREA
ROOF
VOID
ETFE ROOF
ROOF
ETFE ROOF
ROOF
ROOF
CHILDRENS ROOF TERRACE / PLAY (THIRD FLOOR)
LIGHTWELL
LIGHTWELL
GREEN ROOF OVER THEATRE PLANT (THIRD FLOOR)
VOID
VOID
VOID

Brookfield
MULTIPLEX
Built to outperform.
BM

NSGH FAMILIARISATION

A49618520

Purpose

A49618520

Project Overview

A49618520

Project Overview

A49618520

Utilities

A49618520

Department Locations – Level 0

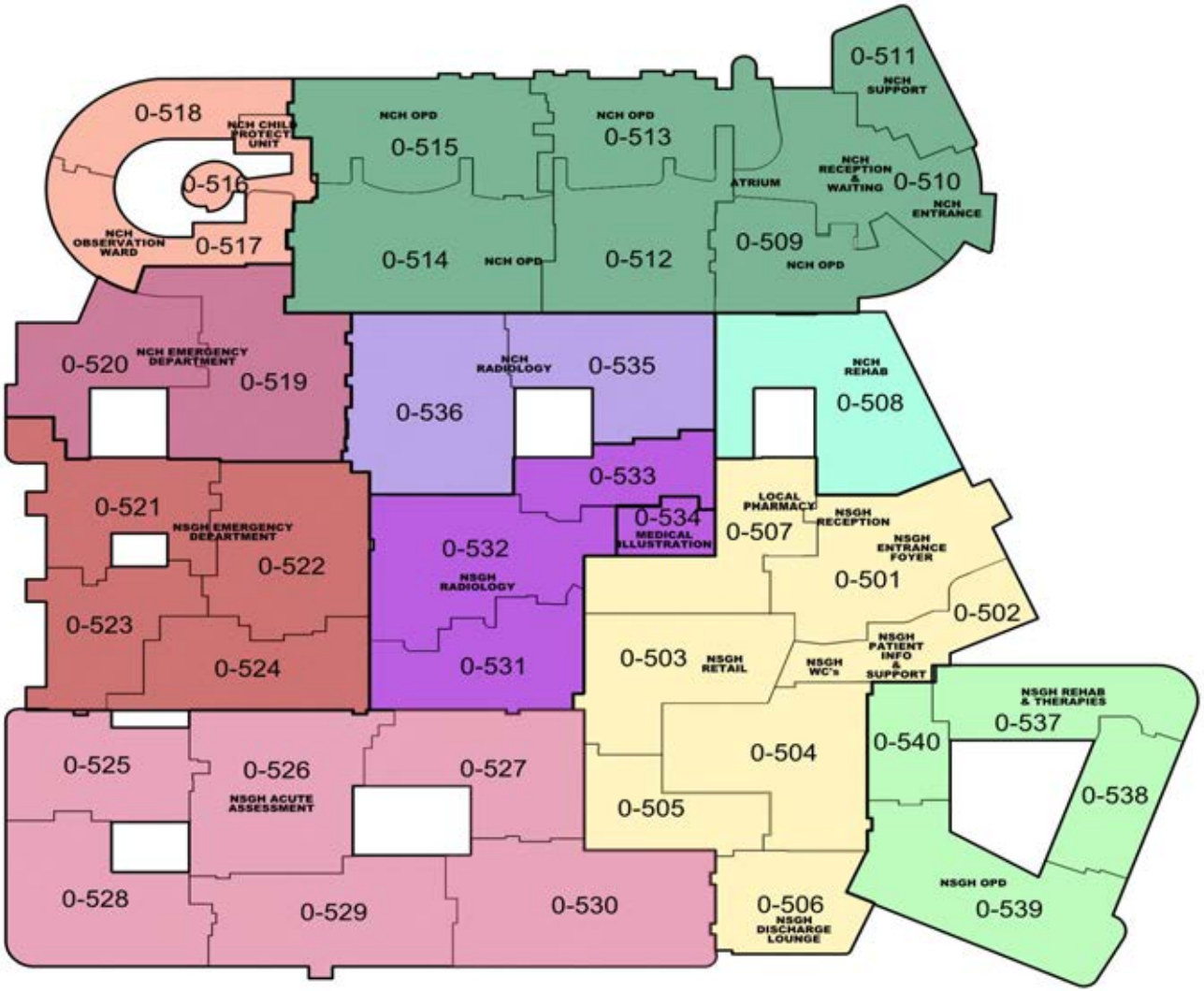

A49618520

Department Locations – Level 1

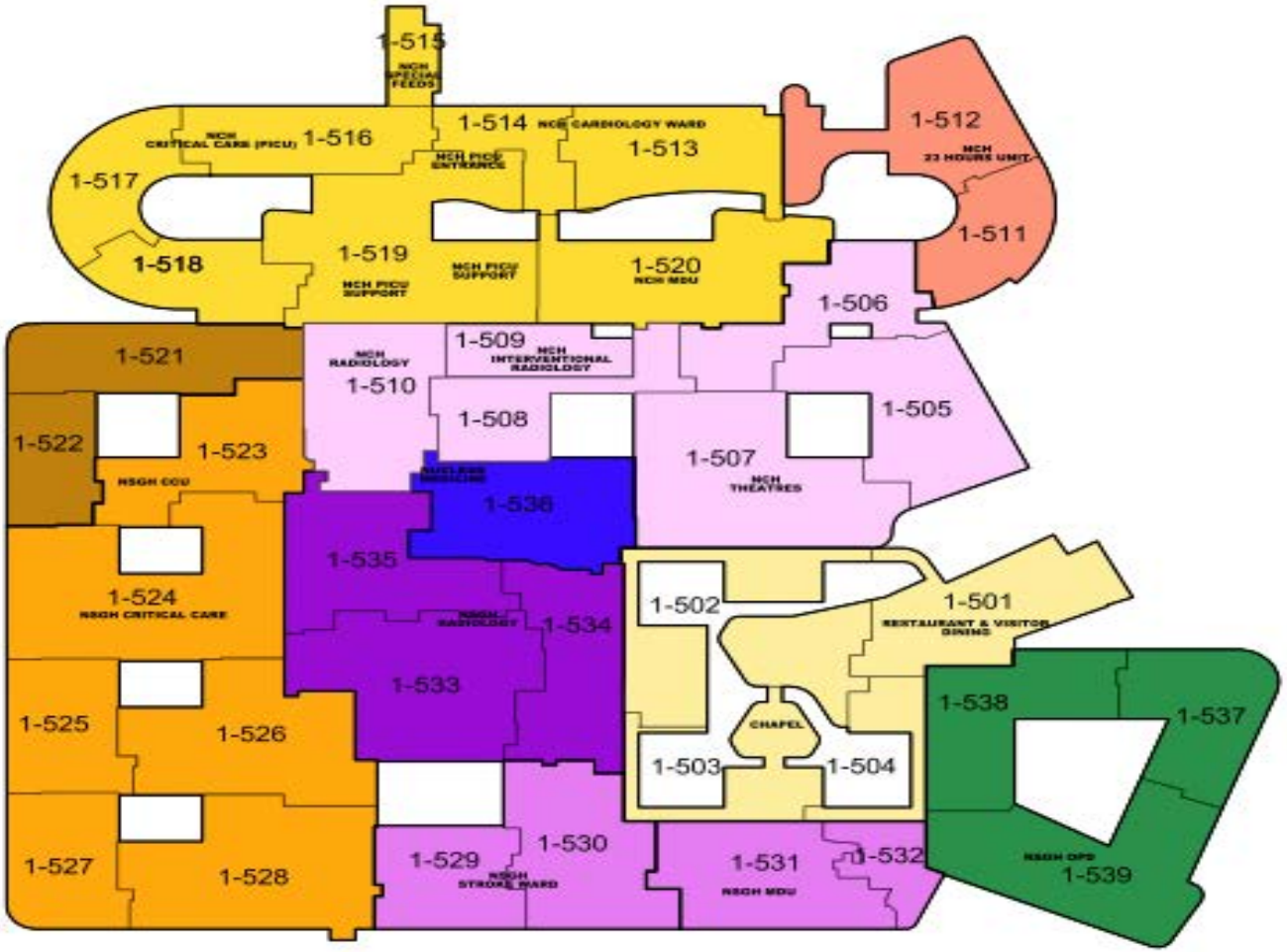

A49618520

Department Locations – Level 2

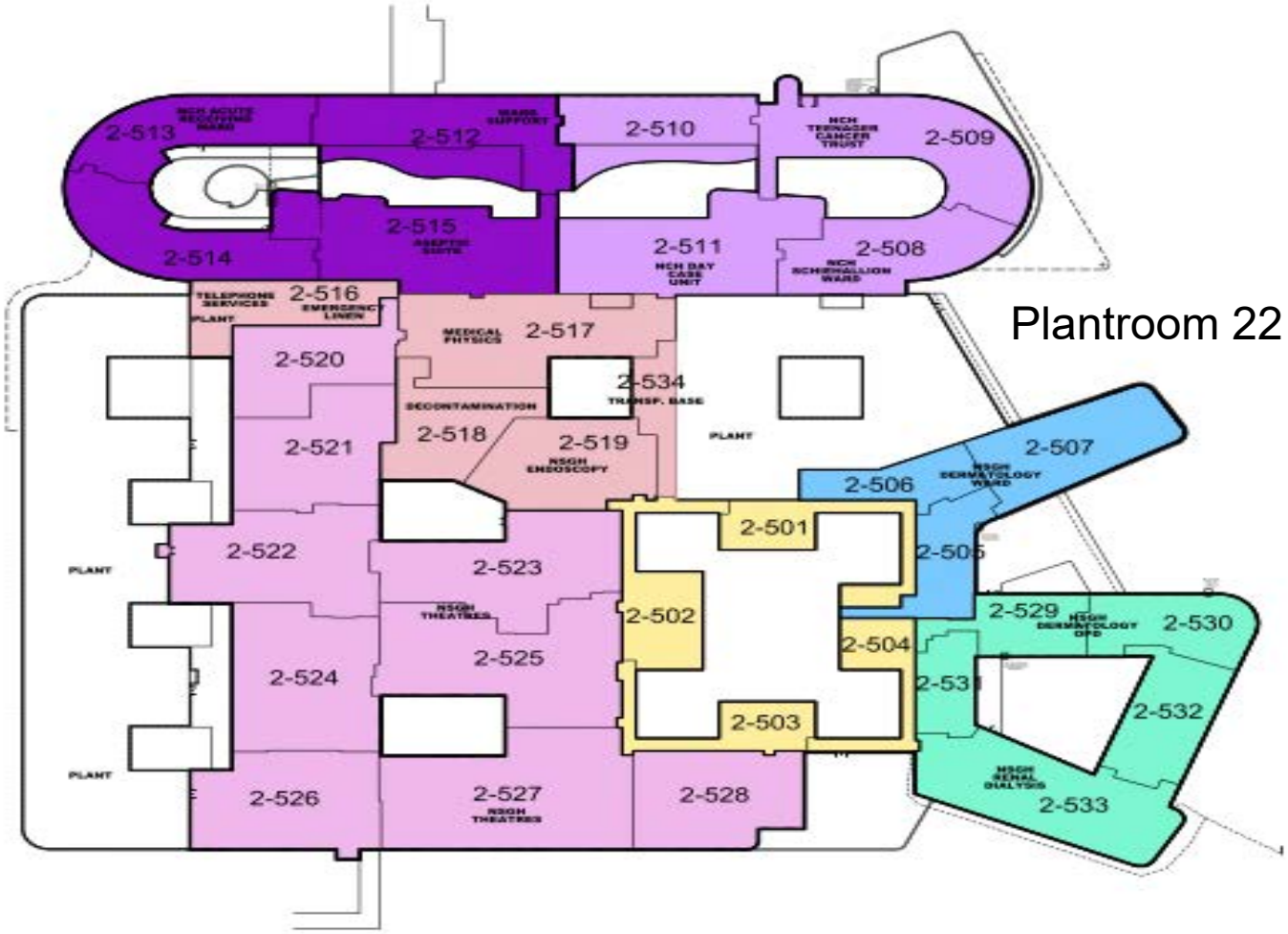

A49618520

Department Locations – Level 3

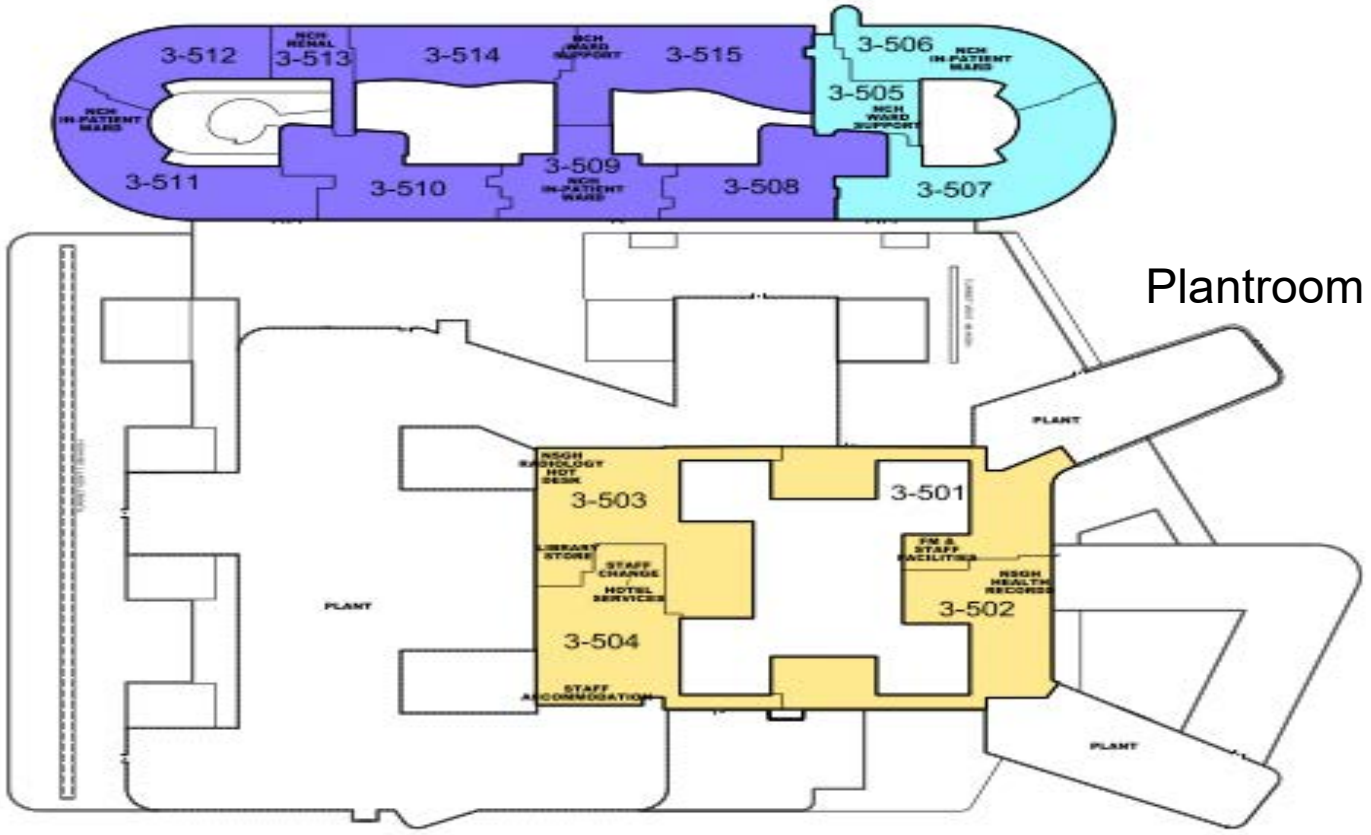

Plantroom 32

Plantroom 33

A49618520

Department Locations – Level 4

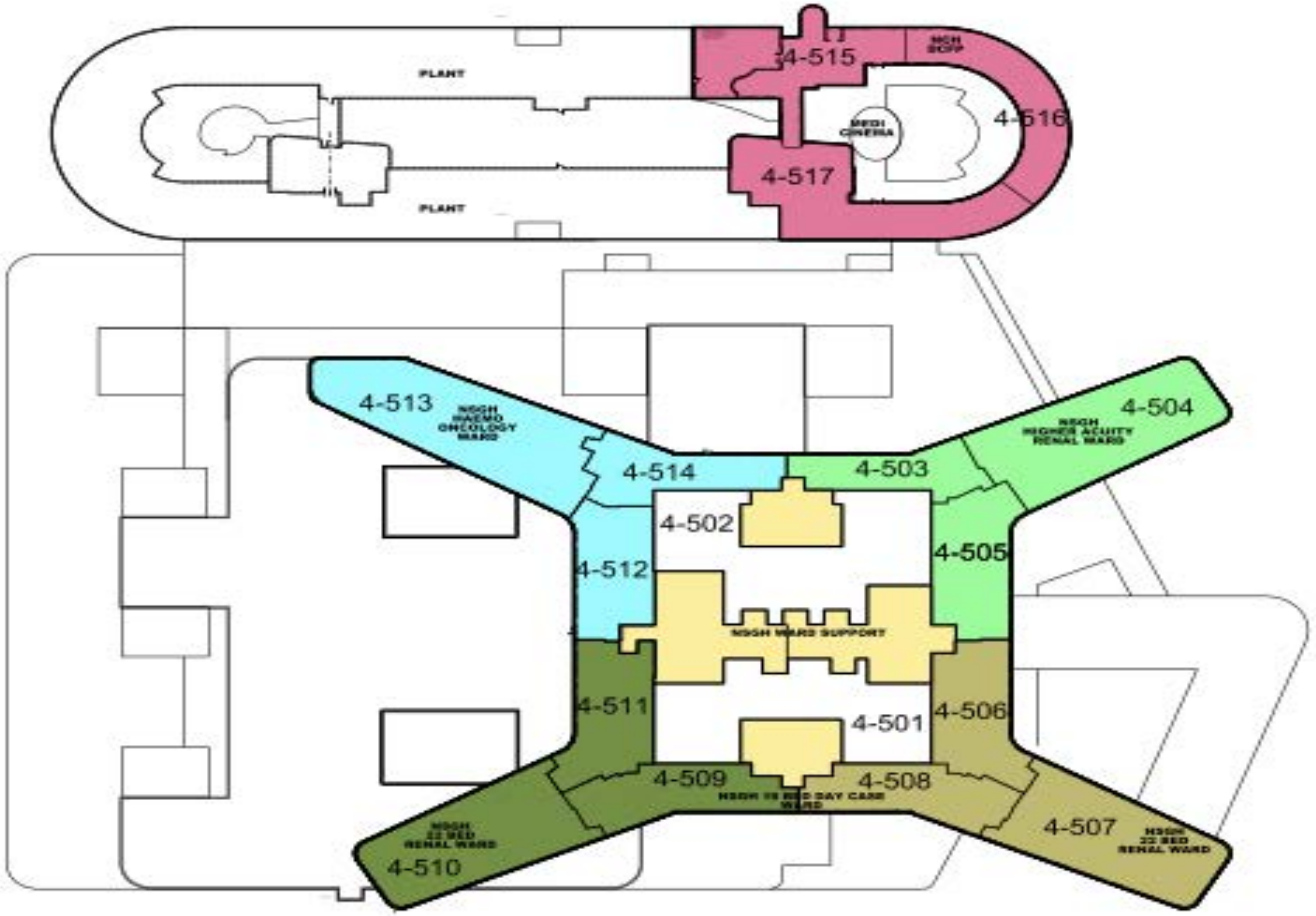

A49618520

Department Locations – Level 5

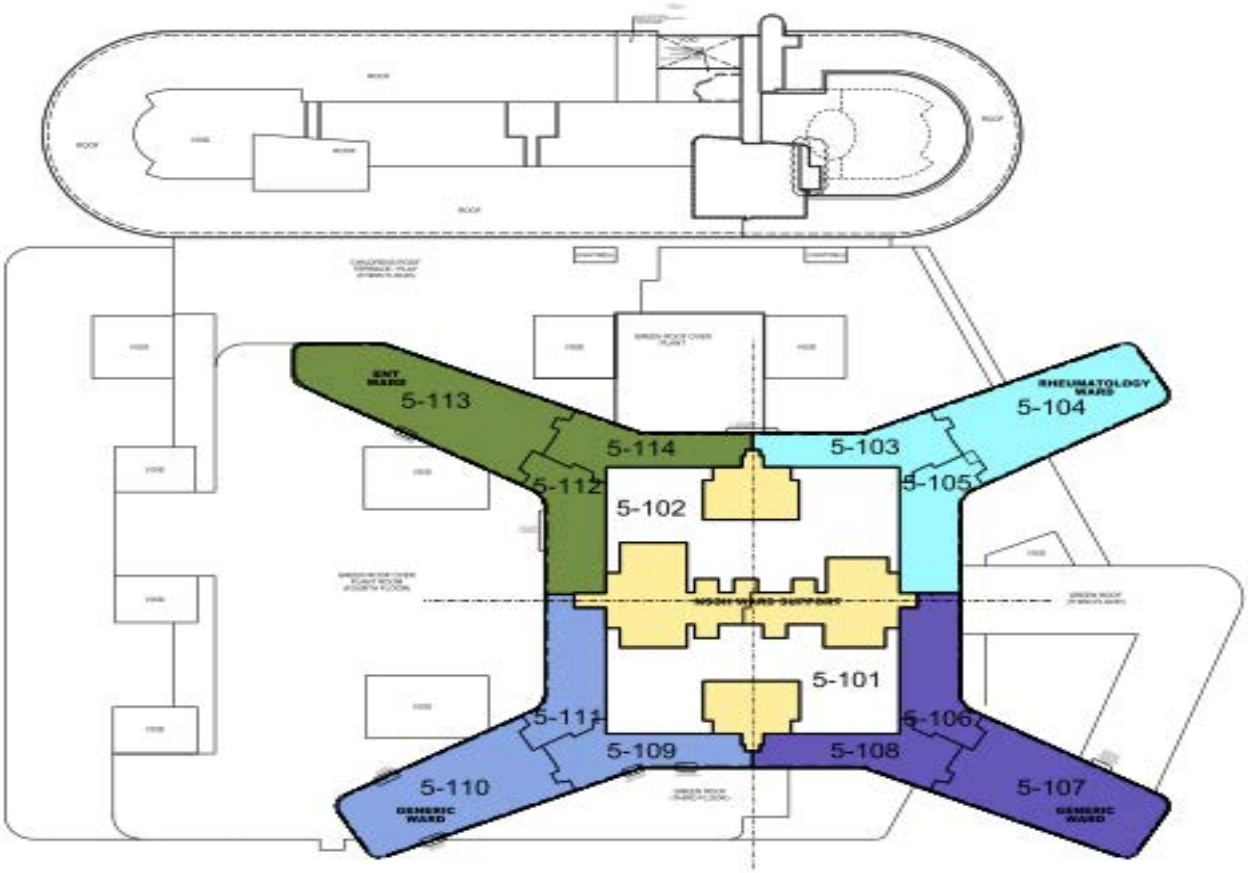

A49618520

Department Locations – Level 10

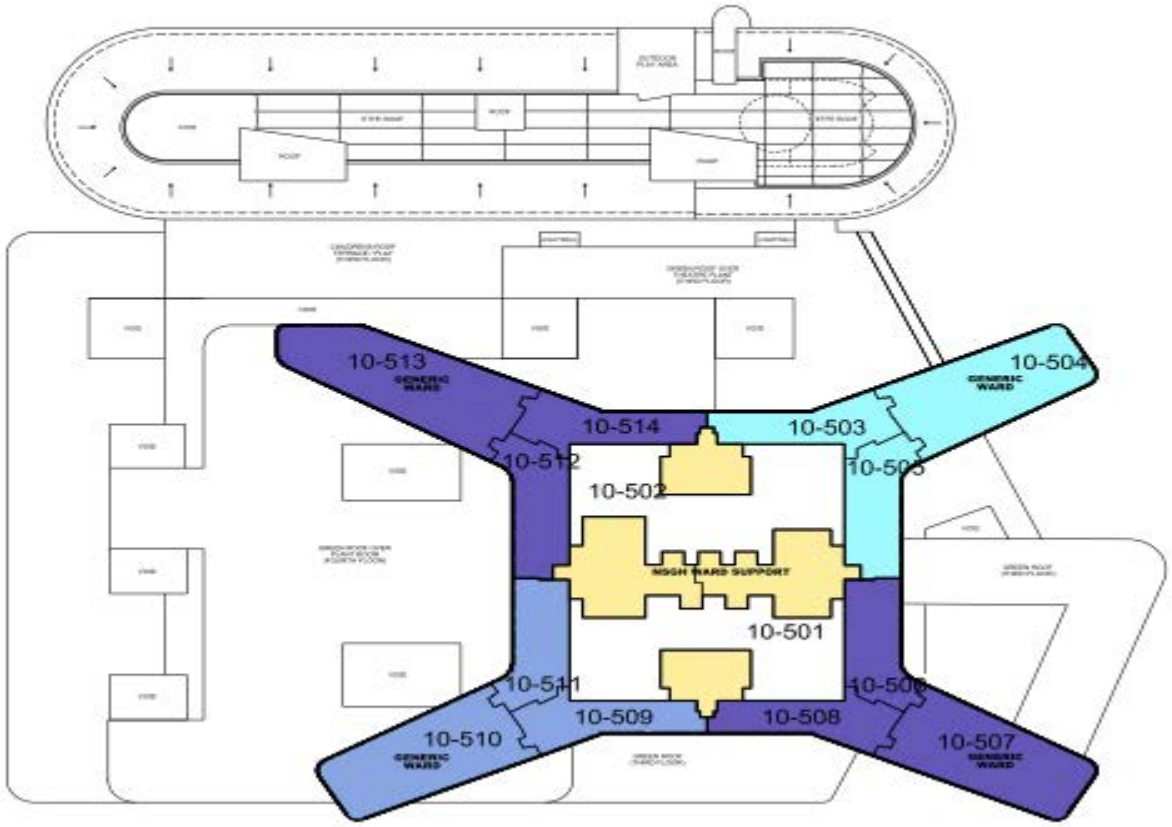

A49618520

Department Locations – Level -1

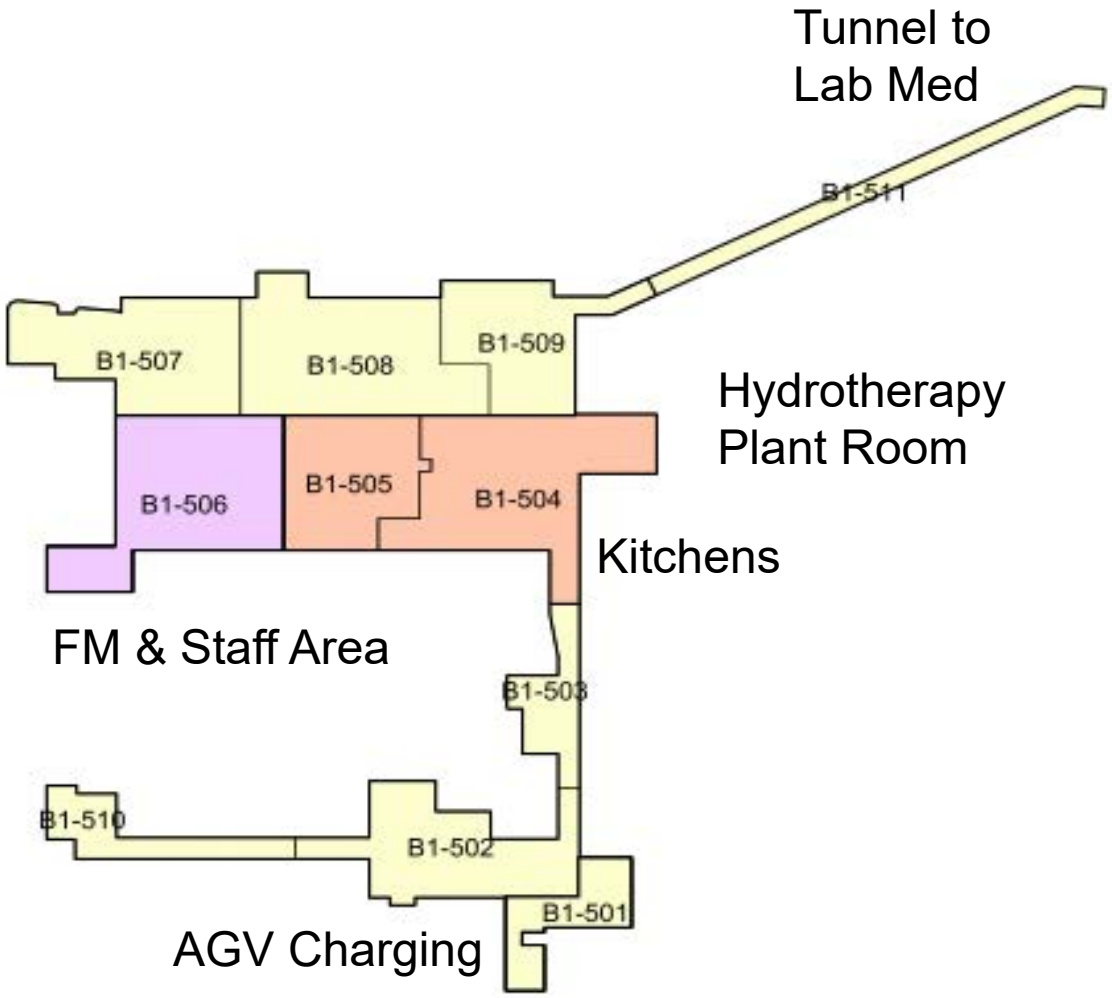

A49618520

Plant Rooms & Areas Served

A49618520

Plant rooms area served

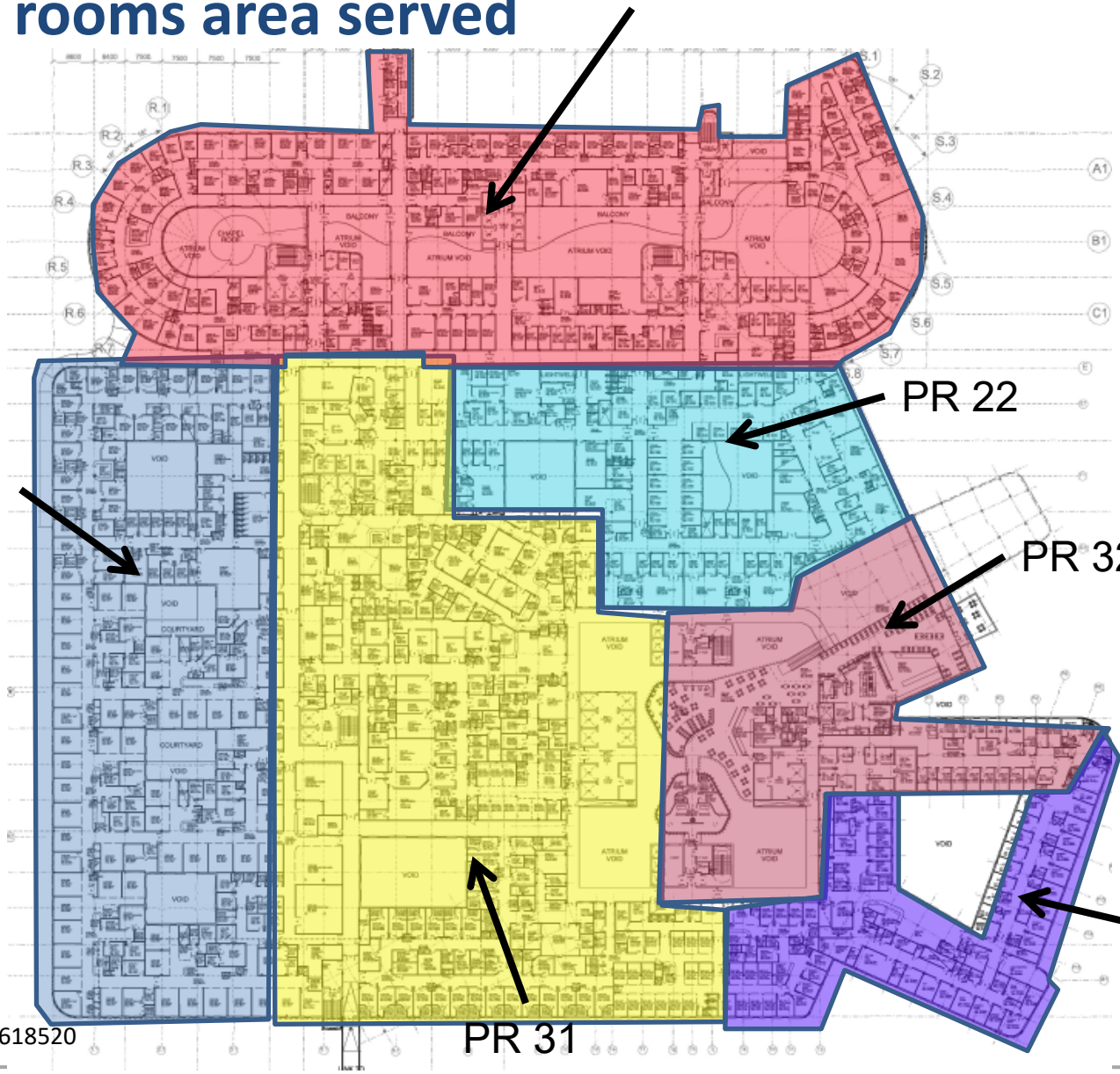

A49618520

Plant rooms area served

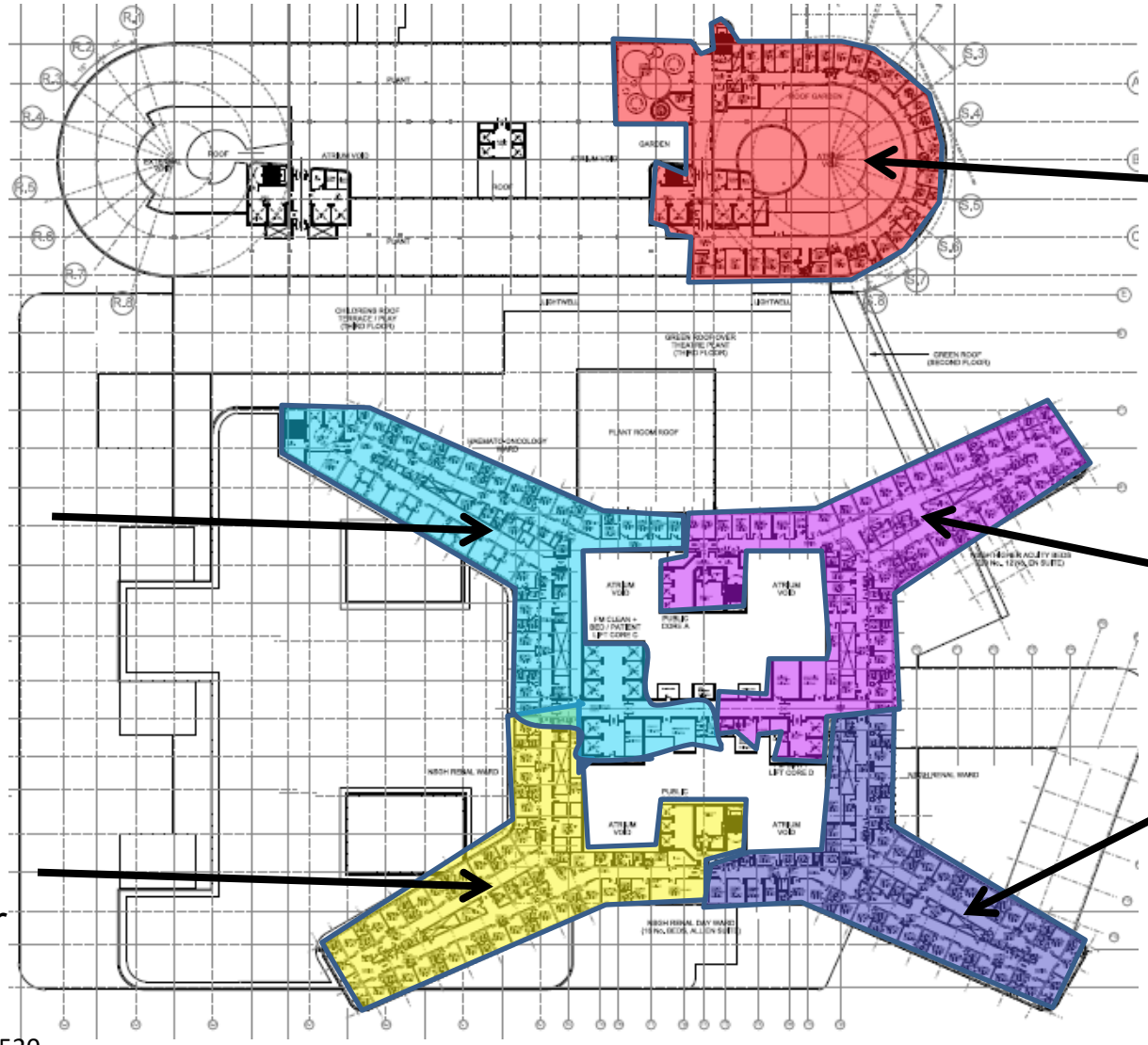

A49618520

High Voltage Distribution

A49618520

Electrical Distribution

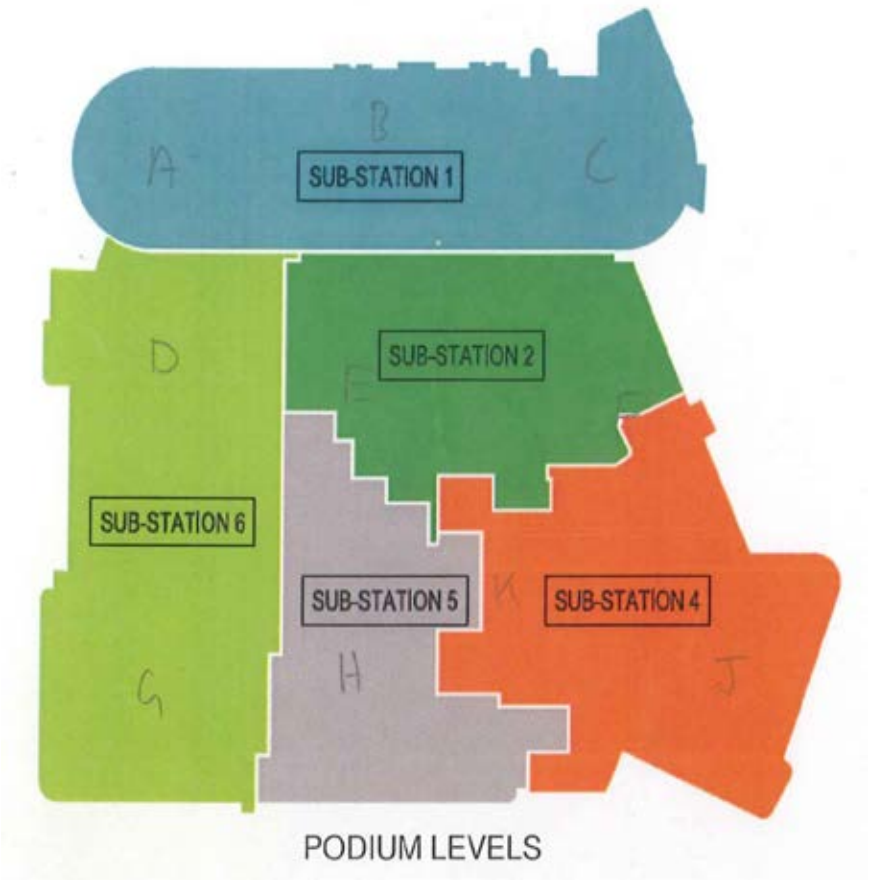

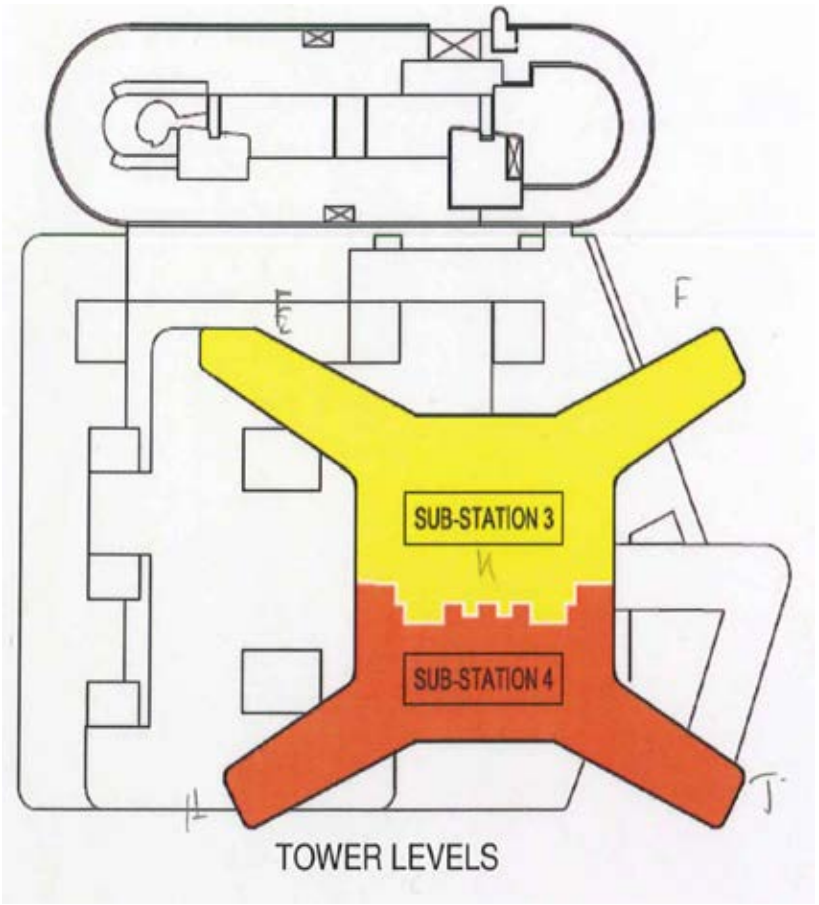

A49618520

Lifts

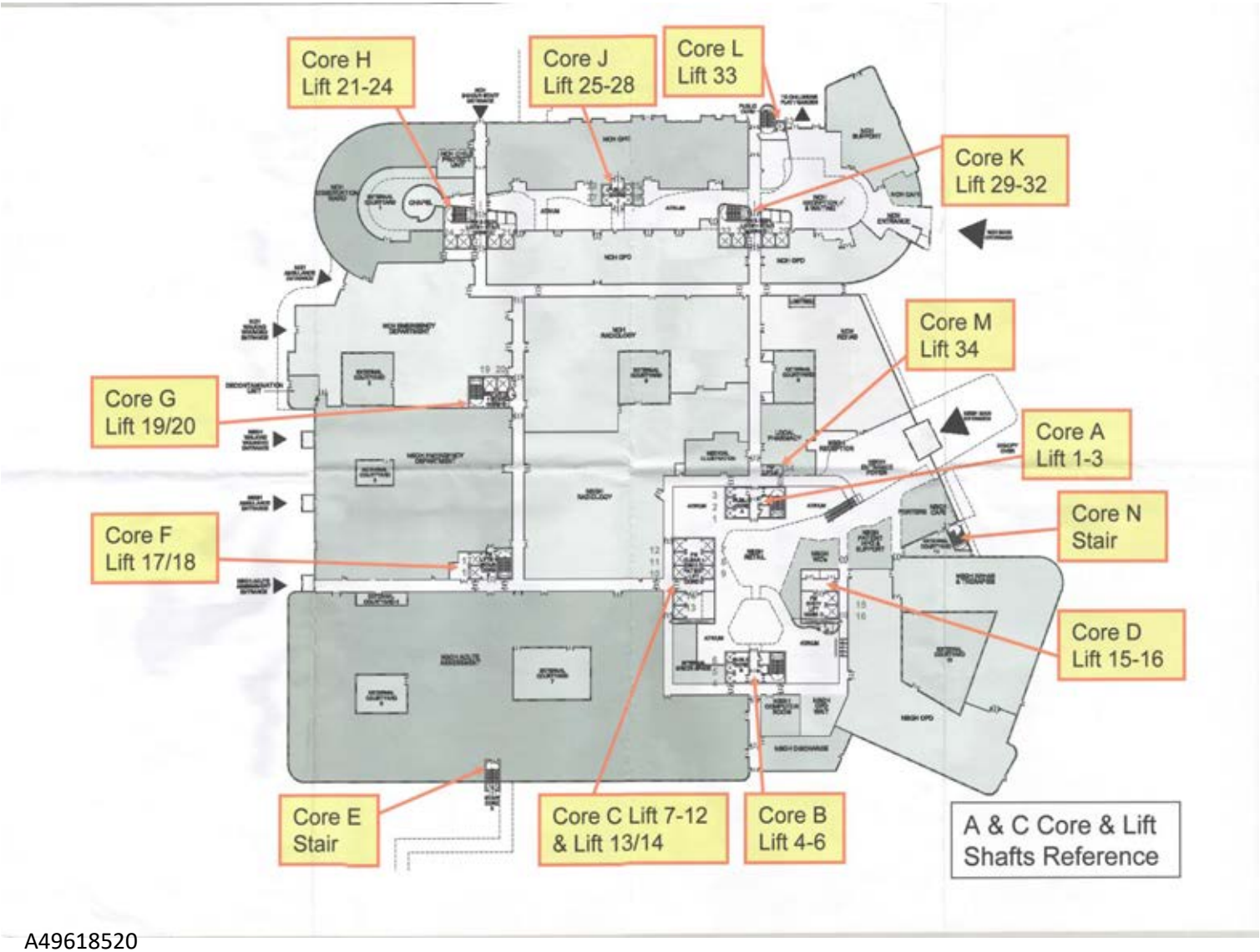

A49618520

Brookfield MULTIPLEX

Built to outperform.

BM

A49618520

NHS Greater Glasgow and Clyde

Brookfield

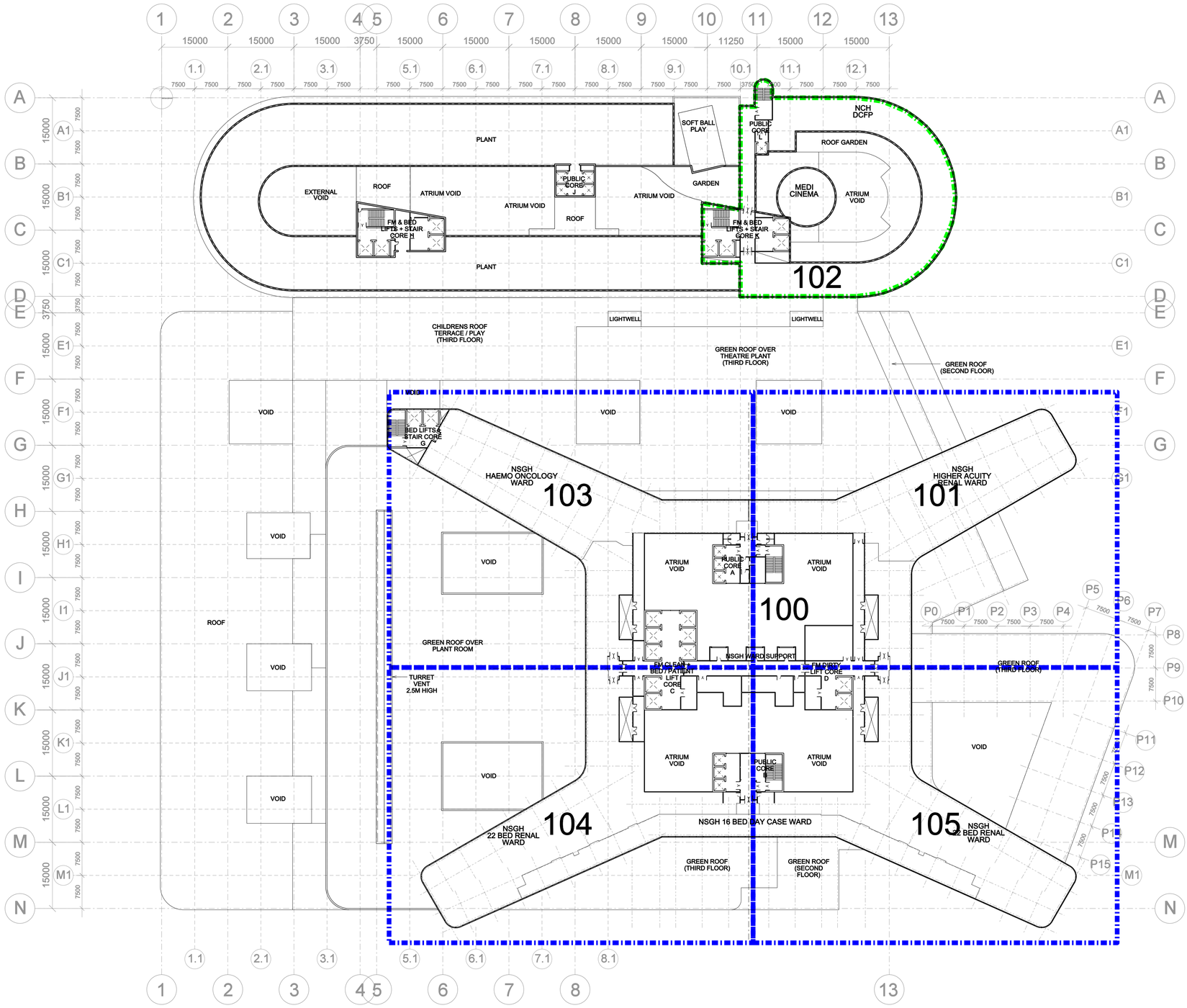

ITPD Reference:
VOLUME 2.0
Section 2.3

FOURTH FLOOR - DEPARTMENT LAYOUTS KEYPLAN (1:200 SET)

New South Glasgow Hospitals (NSGH) Project ITPD

Date: 20.08.09
Scale @A1: 1:500
Drawing Number: NA-XX-04-PL-252-000
Revision: Tender

A49618520

NEW SOUTH GLASGOW HOSPITAL

Clinical Output Specification

AREA	RHEUMATOLOGY

1. INTRODUCTION

The function of the Department of Rheumatology is the prevention of disability and long term joint damage in patients with joint disease. Specifically, the Rheumatology Department offers a dedicated and comprehensive service for the management and treatment of musculo-skeletal and rheumatological conditions.

Services are delivered by a multi-disciplinary team that includes consultants, junior medical staff, nurses (including nurse specialists) and AHP's.

Patients are referred as outpatients from GPs and as inpatients, via the emergency assessment area (currently A&E) with referrals from all these sources accepted on both an elective and emergency basis.

Because of the nature of their disease rheumatology patients can find movement/mobilisation difficult and painful.

The Services provided include:

Rheumatology delivers a range of tertiary services that include:

- The management of connective tissue disease (Chronic inflammatory disease of joints, muscles, etc)
- The management of psoriatic disease (Characterised by painful swollen joints)
- The management of ankylosing spondylitis (Inflammation in the joints of the spine)

Rheumatology Services will be provided from the Generic Outpatient Clinics, the Generic Wards and from the Medical Day Unit. Please cross refer to the COS's. Please note that the Rheumatology Ward will differ from the Generic Ward template in that the service requires access to a bath to support therapeutic bathing activities within in-patient ward areas

The Services provided exclude:

The unit does NOT deliver services to children under 16 years of age.

2. LOCATION AND LINKS

Rheumatology has established links with a number of clinical areas that should be considered when identifying its preferred location within a new facility. Key links are highlighted in the table below.

Day Case Area

Close to	Reason	*Category
Medical Wards	To support easy access to consultant skills/optimise working arrangements	2
Main Entrance/Ground Floor	To minimise travel distances for patients who often find mobilisation difficult	2
Outpatients	To minimise patient/staff travel times	3

*1 = Essential adjacent
*2 = Important 2 minutes walking
*3 = Desirable 5 minutes walking

Outpatients

Close to	Reason	*Category
Main Entrance/Ground Floor	To minimise travel distances for patients who often find mobilisation difficult	1
Radiology	Rheumatology patients frequently require radiological investigations during clinics	1
OT	To minimise travel distances for patients and support future “one stop” multi-disciplinary clinics (40% of patients access OT Services)	2
Physio	To minimise travel distances for patients and support future “one stop” multi-disciplinary clinics (40% of patients access Physio Services)	2
Podiatry	To minimise travel distances for patients and support future “one stop” multi-disciplinary clinics	2

	(15% of patients access Podiatry Services)	
Orthotics	To minimise travel distances for patients and support future “one stop” multi-disciplinary clinics	2
Medical Wards	To minimise transfer distance for patients and support efficient working practices for staff	3

*1 = Essential adjacent
*2 = Important 2 minutes walking
*3 = Desirable 5 minutes walking

Inpatient Beds

Close to	**Reason**	***Category**
General Medical Beds	To support easy access to consultant skills/optimise working arrangements	3

*1 = Essential adjacent
*2 = Important 2 minutes walking
*3 = Desirable 5 minutes walking

3. ACTIVITY

Bed numbers have been derived from the Pan Glasgow Bed Modelling exercise and outpatient projections have been developed from the methodology described within the General Outpatient COS.

4. TRENDS

A range of clinical developments, treatment protocols/regimes, new technology and demographic trends are likely to impact upon services delivered by rheumatology. These are primarily related to new drug treatments and include:

- The increasing use of Biologic (anti-TNF) therapies.

Administration of these drugs is supported by complex pre-treatment clinical assessments. This situation is unlikely to change in the foreseeable future, resulting in the requirement for significant on-going consultant support as each visit is essentially a new “decision to treat”. This is likely to maintain a high new:return ratio (currently between 1:6 and 1:8) despite increasing Primary Care management for other rheumatology patient groups. In addition, as a result of the risks associated with these treatments additional counselling is required before they can commence.

- An increase in non-consultant-led clinics

Rheumatology already runs a range of non-consultant-led clinics, including physiotherapy-led joint injection clinics, etc. This trend is likely to continue, with additional plans being developed to support redesign work that will increase patient throughput by consultants.

- Additional consultant appointments/redesign of consultant-led clinics

In order to meet existing 18 week waiting times targets 2 additional consultant appointments were made last year (2007/08) with a further consultant appointment being made this year (2008/09). In addition a redesign of consultant-led clinics is currently underway that will lead to more preparatory activities being undertaken by suitably trained nursing staff, e.g. detailed history taking, in order to increase the value-adding component of all clinic time. Additional work on referral protocols/pathways will be required to further optimise the effects of this redesign.

- Increasing numbers of “one-stop” clinics

Rheumatology patients frequently require the support of a multi-disciplinary team which can result in the requirement for multiple hospital attendances. The department would like to offer a range of one-stop clinics in the future that would be supported by a range of disciplines including AHP’s and orthotics. This would have a beneficial impact (reduction) on overall patient attendances.

- The increasing management of some rheumatology patients within Primary Care

With the exception of those new therapies identified previously, there is a general trend towards more of the rheumatology patient pathway being managed within Primary Care with improved rapid access to acute facilities as required. The anticipated net effect of these changes is that they will offset the requirements for additional consultant input to the management of new therapies.

5. HOURS OF SERVICE

Current Hours of Service:

Inpatient: 24 hours/day, 7 days per week
Outpatients: 8.30 – 1700 (Monday to Friday) over 2 sessions
Day case: 8.30 – 1800 (Monday to Friday)

One consultant also currently delivers an evening clinic.

Proposed Hours of Service:

Although there are no firm plans at present, extended hours of service could be used to support future service expansion. In particular it is noted that:

- Rheumatology could benefit from access to a 7 day a week day case area. (Many patients are on treatment regimes that require drug administration on 5 consecutive days)
- Modern drugs/treatment regimes mean that more patients can/do return to work with a consequential desire for access to clinics “out of hours”.

6. WORKLOAD INDICATION (weekly)

Area of Service	Type of Activity	Current workload
Outpatients	Consultant-led clinics	9 clinics
	Nurse-led clinics	4 clinics

As stated there are no current plans to change hours, however there may be a requirement to extend hours in the future.

7. KEY OPERATIONAL PROCESSES / ISSUES

Rheumatology services require access to a range of diagnostic support including:

- Plain film X-Ray
- CT
- MRI
- Echo
- Biochemistry
- Bacteriology
- Haematology
- Immunology
- Ultrasound (carried out by Consultants within the Rheumatology Dept/outpatient areas as required)

Typical Outpatient Process

Patient arrives at clinic – "booked in" by receptionist – asked to wait – greeted by nurse – has height, weight measured – has BP done – asked to provide a urine sample – has urine sample tested – asked to wait – sees consultant/member of medical team/specialist nurse - sent for X-ray – returns to see consultant – treatment options are discussed – leave clinic.

Typical Day Case Process

Patient arrives at unit – shown to waiting area - "booked in" by nursing staff – shown to trolley/chair – "clerked-in" by medical staff – treatment prescribed – treatment administered by nursing staff – patient observed during treatment – shown to waiting area when treatment completed – reviewed by nursing staff – discharged from day unit.

Rheumatology Outpatients

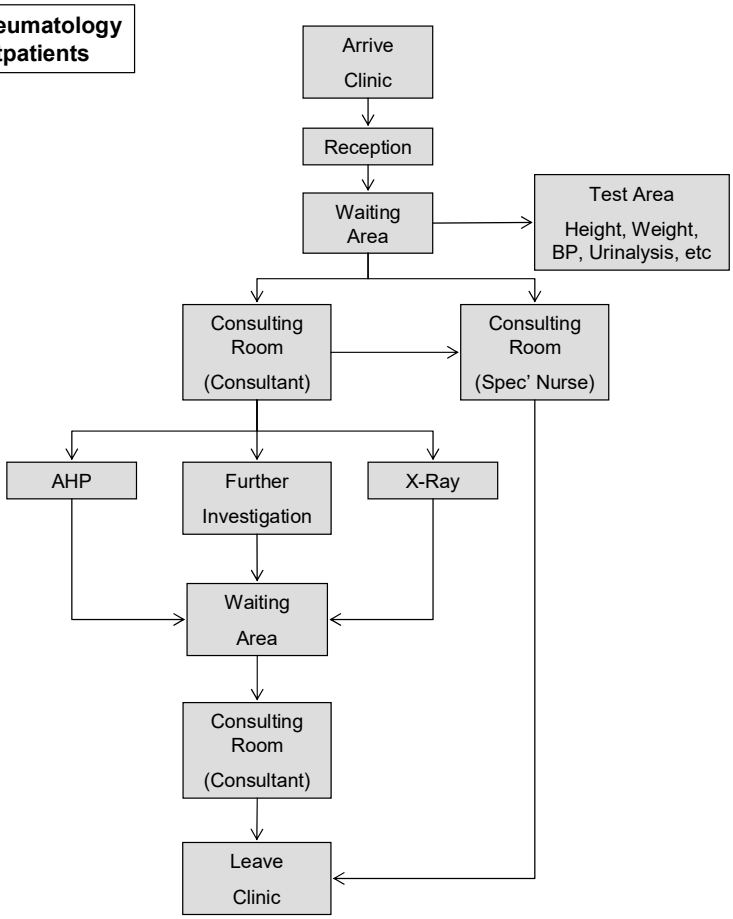

Rheumatology Inpatients

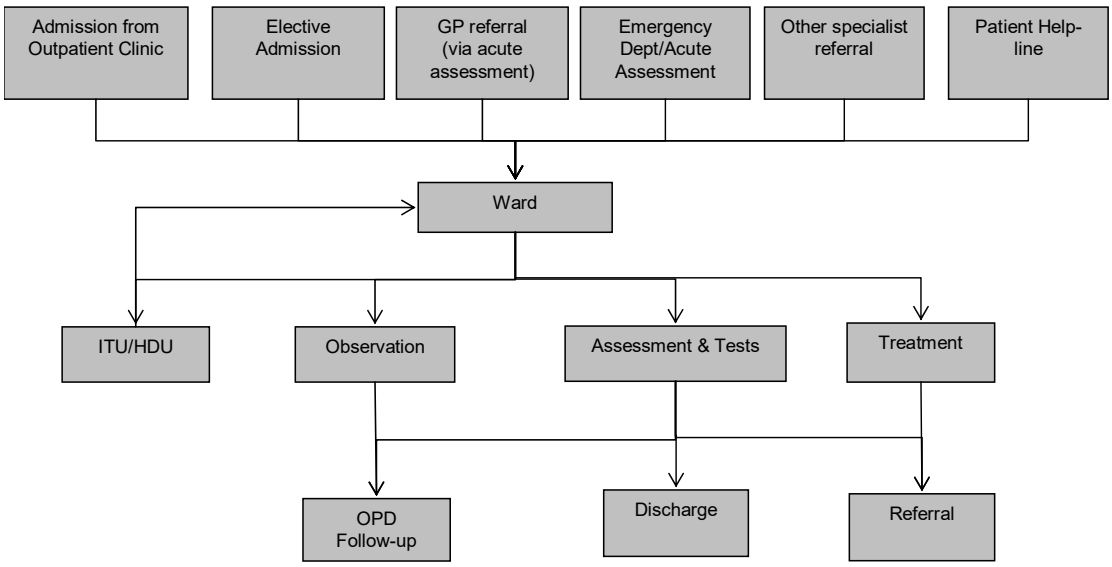

8. EQUIPMENT

Rheumatology-specific equipment which is worthy of note includes:

- Large “lounger style” chairs for patients at the bedside (these are substantially larger than conventional bedside chairs)

NEW SOUTH GLASGOW HOSPITAL

Clinical Output Specification

AREA	ENT/AUDIOLOGY

1. INTRODUCTION

The department of ENT provides a full range of clinical services for outpatients and both elective and emergency inpatient services. The department manages diseases of the ears, nose, mouth and throat. In many circumstances neurological, ophthalmological and oesophageal problems fall within remit of department.

Otolaryngology is primarily an outpatient based surgical speciality with less than 20% of the outpatients proceeding to surgery.

The department's inpatient facilities provides a comprehensive service to patients across Glasgow but also receives a number of tertiary referrals.

The department works very closely with other clinical specialities including:-

- Audiology
- Oral and Maxillofacial surgery
- Oncology

Accommodation Requirements

- 3 clinic consulting rooms with specialist ENT dental chairs
- 2 audiology testing rooms
- 3 hearing test/ interview rooms
- Access to the generic clinics

The ENT service will be provided from generic wards, generic theatres and dedicated specialist outpatient facilities. The dedicated outpatient facilities are identified in the Schedule of Accommodation under Outpatient Department section, subsection - ENT. It is also listed in the appendix of this document.

The Services provided include:

- Outpatient services
- Inpatient services (elective and emergency)
- Audiology services

The Services provided exclude:

- Day surgery (seen at new Victoria Hospital or Neurological Sciences, SGH)
- Paediatric (<16years)

2. LOCATION AND LINKS

External Department Links

ENT Outpatients

Close to	Reason	*Category
Decontamination unit	Need fast turnaround of scopes	1
Specialist ENT outpatient rooms must be co-located with the generic outpatient clinics	To support additional clinic space requirements on a daily basis. To support sharing of clean/dirty utility and other support space.	1
Audiology	Patients are regularly referred between both departments	2
ENT in-patients	To support staff/patient movement as appropriate	3

*1 = Essential adjacent
*2 = Important 2 minutes walking
*3 = Desirable 5 minutes walking

ENT In-patients

Close to	Reason	*Category
ENT Outpatients	To support staff/patient movement as appropriate	3
ENT Operating Theatre	To minimise patient transfer times to/from theatre	3

*1 = Essential adjacent
*2 = Important 2 minutes walking
*3 = Desirable 5 minutes walking

ENT Theatres

Close to	Reason	*Category
Decontamination unit	Need fast turnaround of scopes	3
Recovery Areas	To support rapid transfer of patients whose airway may be compromised	1
ENT wards	To minimise patient transfer times to/from theatre	3

*1 = Essential adjacent
*2 = Important 2 minutes walking
*3 = Desirable 5 minutes walking

3. ACTIVITY

The ENT beds have been derived from the Pan Glasgow Bed Modelling Exercise.

Activity projections for outpatients have been completed using the methodology described within the General Outpatient COS.

4. TRENDS

Nil of note.

5. HOURS OF SERVICE

Current Hours of Service:

Outpatients: - 9am – 5pm Monday to Friday

Inpatient: - 24/7

Proposed Hours of Service:

As above

6. WORKLOAD INDICATION (weekly)

Area of Service	Type of Activity	Current workload
e.g. Outpatients	*Dr-led clinics*	*9 sessions*
	Nurse led clinics	*5 sessions*
	AHP	*0*

a) Need to state length (hrs) of sessions

Outpatients = 3.5 hours
Theatre = 3.5 hours

b) If a change proposed

No change proposed, however in the future may be potential to increase hours.

7. KEY OPERATIONAL PROCESSES / ISSUES

The ENT department routinely requires access to the following imaging and laboratory tests: CT, MRI, Ultrasound, Barium studies and plain film. Biochemistry, Haematology, Microbiology and Immunology standard testing.

- ENT emergencies in common with Ophthalmology are not undertaken within ED/EMC but it is requested that the ENT ward has a specific ward treatment/examination room.

- *The use of an ENT Treatment room within the ENT ward is paramount for the treatment of ENT emergencies ie Epistaxis, airway management and flexible naso-endoscopies. The treatment room within the ward has the necessary equipment to deal with these types of emergencies and also has ENT trained nursing staff to assist in an emergency.*

ENT OUTPATIENTS FLOW DIAGRAM

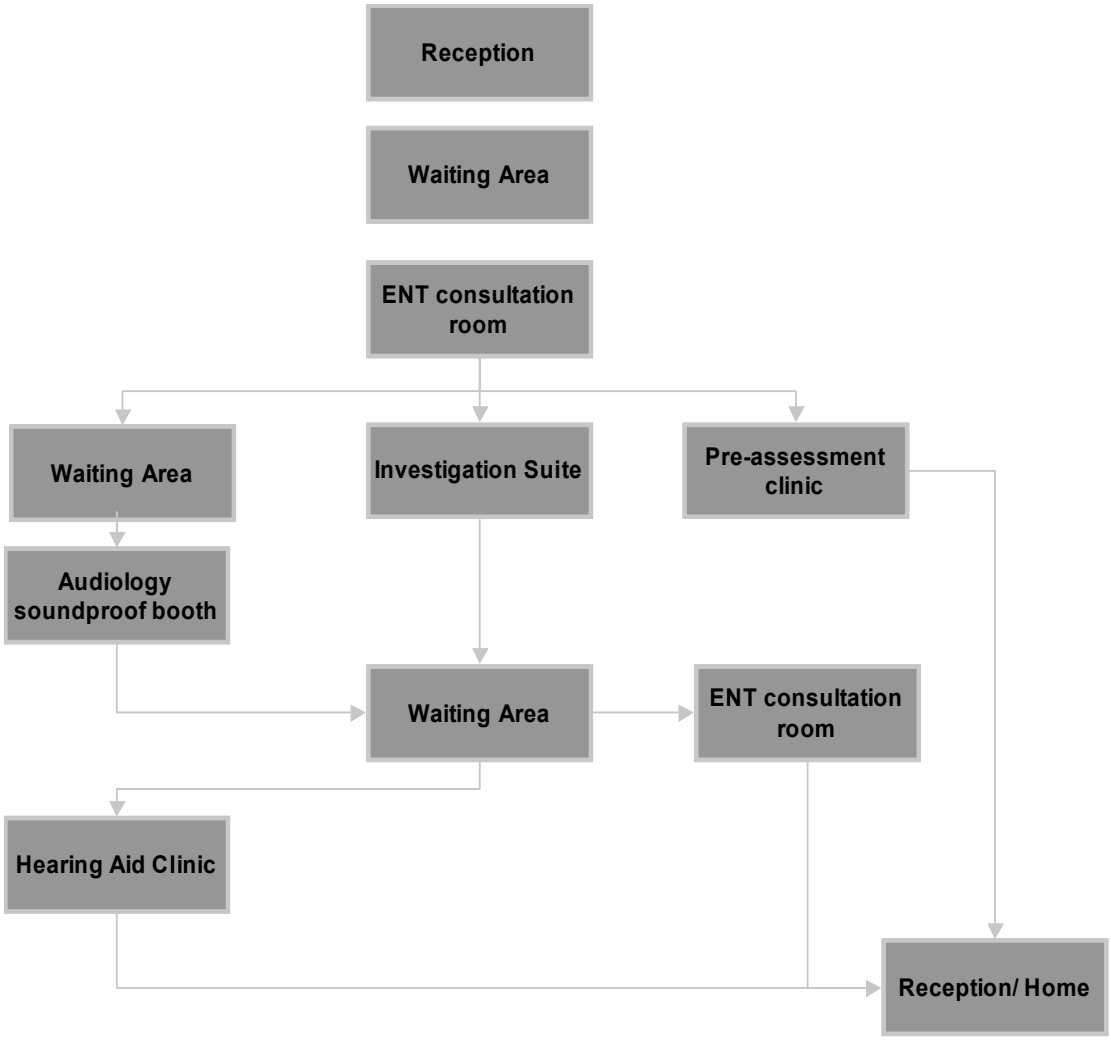

8. EQUIPMENT

Heavy/bulky - Nil. Audiology will have sound proof booths.

New - Nil

Specific requirements - Nil

NHS Greater Glasgow and Clyde

Infection Control meeting

Hillington Project Office – Monday 18th May 2009 at 1pm

Notes of Meeting

Present

Tom Walsh
Heather Griffin
Stephen Gallacher
Fiona McCluskey
Annette Rankin
Sandra McNamee
Pamela Joannidis

The purpose of this meeting was to review the advice given to date by infection control and agree a final infection control position with regard to the New South Glasgow Adult Hospital areas shown below:

- Isolation Rooms
- Renal Dialysis
- Day Beds
- Theatre Recovery
- Endoscopy

Isolation Rooms – New South Glasgow Hospital

The group reviewed the paper produced by Drs Redding and Hood and Annette Rankin. The following was agreed as the final infection control position
1) Isolation rooms for the New South Glasgow Hospital are as follows:

Haemato-oncology -
Sealed ward with hepa filtration positive to the rest of the hospital

Respiratory (serving rest of medical)

3 negative pressure sealed rooms (without ante rooms)

Rheumatology/gastro undertake similar therapies but clinicians had not requested any isolation facilities. Project team to check with Gastro and Rheumatology clinicians that they area comfortable that 3 rooms is sufficient for all needs.

NB post meeting note - Clinicians in Gastro and rheumatology do not feel that they need any isolation rooms, think the 3 in respiratory is plenty)

Renal inpatient wards
2 positively pressure sealed rooms with negatively pressured anti- room

A&E
2 negative pressure sealed rooms (without anti-rooms) with patients being transferred to HDU if required

Critical Care (includes ICU/Surgical and medical HDU)

10 isolation rooms with anti-rooms - as per user request.

(NB It was agreed that no isolation rooms were required for CCU , surgical, orthopaedics or the Acute Assessment Unit).

Renal Dialysis
Users have requested that the layout of the 30 stationed renal dialysis unit be the same as the Stoghill ACH Dialysis Unit due to be opened next month.
The group therefore discussed and agreed to the unit being three open plan rooms with 8 “chairs” and 6 side rooms although it was noted that the spacing between “chairs” would have to be a minimum of 3.6m² .

Day Beds

Medical day Unit (MDU)
There is a user preference for an open plan MDU. The group discussed the option of having the Medical Day Unit mostly open plan with 1 single side room. This was agreed with the understanding that the space between bed/chair areas would be the standard 3.6m².

There are day beds planned within the renal, haemato-oncology and dermatology wards with shared toilets. The layout of the 4 bedded day rooms were discussed with infection control reps at a meeting on 28th November 2008. The advice at this point was for 3 sided open front cubicles.

Renal and Dermatology.
Discussion took place regarding the activity and types of procedures undertaken – these included blood transfusions, iron infusions, line insertions, renal biopsy and biologics infusions

The only concerns were based around line biopsy and line infusions (or similar procedures) being carried out in open plan areas. After consideration it was thought that glass partitions would make no difference and therefore it was therefore agreed that the renal and dermatology day areas could be open plan.

Haemato-Oncology

The haemato-oncology ward has 4 day beds planned within the ward area, the day procedure which will be undertaken within this area are considered by the users to be unsuitable for the Medical Day Unit.

However Given that the haemato-oncology ward is planned to be a Sealed ward with hepa filtration positive to the rest of the hospital infection control requested that the project team contacted users again and raised the potential for cross infections from the day patients to the inpatients to see if these day cases could be moved to the Medical Day Unit. further information was also requested regarding the procedures which would take place. Initial thoughts of the infection control were that perhaps this 4 bedded area should have 4 walls round each patient.

The project team will arrange a meeting with the lead nurse of these specialities to discuss further

Theatres Recovery (40 spaces) and Endoscopy recovery (4 spaces)

The question was raised if the recovery areas could be an open plan – again as long as the spacing was kept to the correct levels (3.6m2) then the Infection Control team thought this acceptable.

UPDATE ON THE ISOLATION ROOMS FOR THE NEW SOUTH GLASGOW (ADULT) HOSPITAL

The following indicates the isolation rooms required for the New Adult Hospital.

Haemato-Oncology Ward

Sealed ward with hepa filtration positive to the rest of the hospital and all highly filtered air to H13 i.e. 99.95%

(NB - requires a negatively pressurised Treatment Room within the Haemato-Oncology Unit for administration of pentamidine inhalations.)

Respiratory Wards (serving rest of medical)

3 negatively pressurised sealed rooms (without ante rooms) - located together

Renal inpatient wards

2 positively pressurised sealed rooms with negatively pressurised ante-room/s – located within the 20 bedded higher acuity ward

A&E (Emergency Department)

2 negatively pressurised sealed rooms (without ante-rooms) - location as described within the Clinical Output Specification

Critical Care (includes ICU/Surgical and Medical HDU)

10 negatively pressurised sealed rooms with ante-rooms – location as described within the Clinical Output Specification

All in accordance with SHPN4 and SHTM 03-01

NHS Greater Glasgow and Clyde

Brookfield

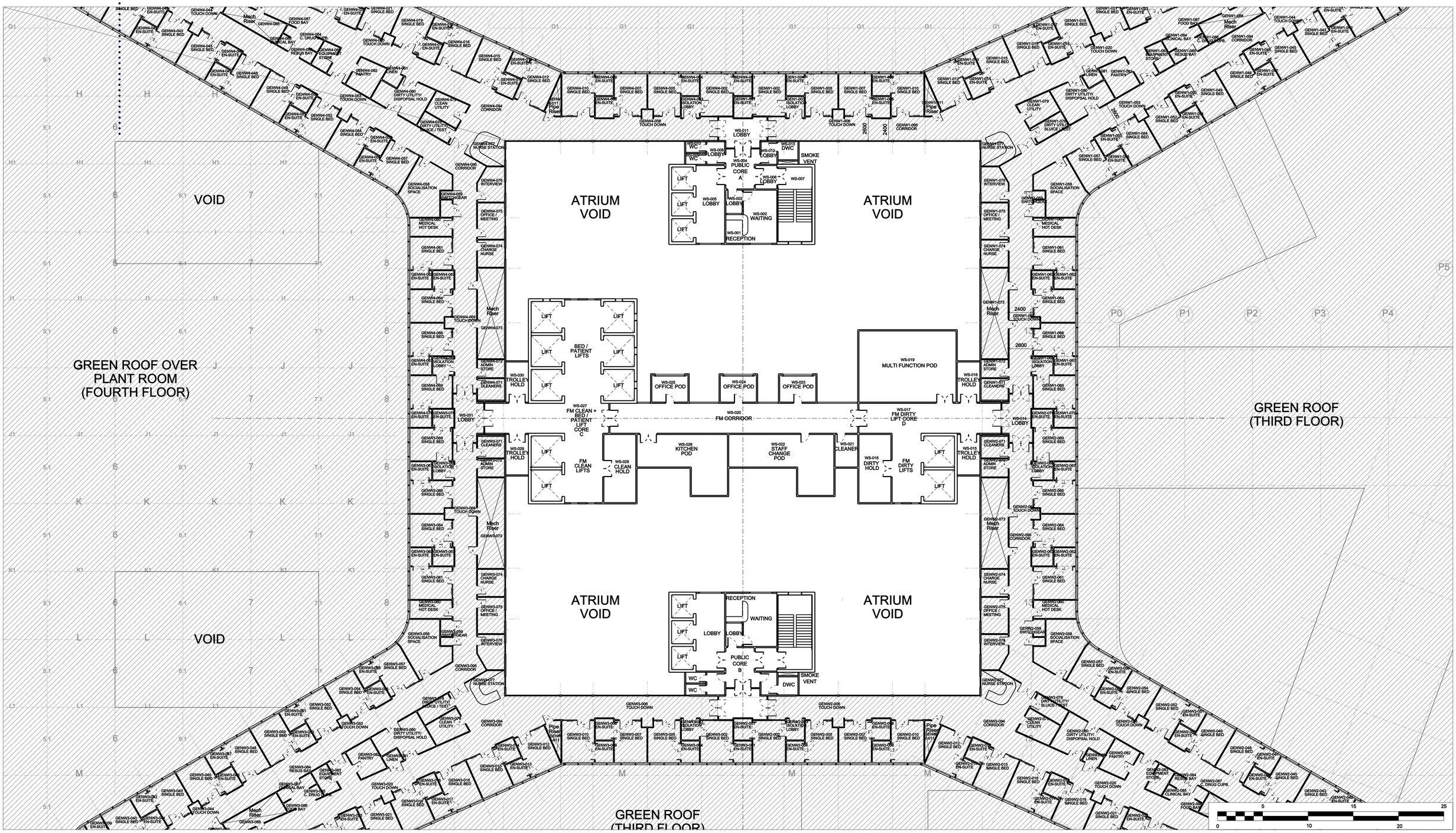

ITPD Reference:
VOLUME 2.0
Section 2.3

FIFTH FLOOR PLAN - LIFT CORE

New South Glasgow Hospitals (NSGH) Project ITPD

Date: 02.09.09
Scale @A1: 1:200
Drawing Number: NA-XX-05-PL-252-100
Revision: Tender

A49618520

Notes:
- This drawing is copyright.
- Do not scale dimensions from this drawing.
- All discrepancies on this drawing are to be reported to the architect.
- Do not modify any element of this drawing.
- Use drawing only for purpose(s) issued.

Designer Identification of Hazard/Risk

ETFE ROOF
REFER TO ETFE ROOF PLANS

ETFE ROOF
REFER TO ETFE ROOF PLANS

ZE 05-513

ZE 05-514

ZF 05-504

ZF 05-503

ZE 05-512

ZF 05-505

ZJ 05-506

ZH 05-511

ZJ 05-508

ZH 05-510

ZH 05-509

ZJ 05-507

ATRIUM VOID

ROOF

387

388

389

390 - 396

384

385

386

380

367 - 372

366

Rev	Date	Drw	Revision Notes	Chk	App
07	31/07/13	CQ	Issued for Information.	EW	EW
06	08/03/12	CQ	Issued for Information.	EW	EW
05	09/01/12	CQ	Issued for Information.	EW	EW
04	06/06/11	CQ	Issued to Building Control for Information only.	EW	EW
03	18/03/11	CQ	Issued for Information.	EW	EW
02	28/10/10	CQ	Issued for Information. Grid ommited	AB	AB
01	28/09/10	CQ	Issued for Information	AB	AB

NORTH

Client: NHS Greater Glasgow and Clyde

Contractor: Brookfield Multiplex / BM

NIGHTINGALE associates architects
87-91 Newman Street
London
W1T 3EY
Tel: 0207 079 9900
Fax: 0207 079 9901
www.nightingaleassociates.com

Project: NEW SOUTH GLASGOW HOSPITALS (NSGH) PROJECT

Drawing Title: FIFTH FLOOR PLAN

4 WEEK LOOKAHEAD	07/07/14
8 WEEK LOOKAHEAD	04/08/14
INSPECTED AREAS	
EXCLUSIONS/CONSTRAINTS	
WINDOW	
DOOR	

Job No	Drawn	Checked	Approved
09080	---	EW	EW

Status	Date	Scale@A0
For Information	25/09/10	1:300

Drawing No

Origin	Zone	Level	Type	Content	Sequential	Rev
NA	XX	05	PL	252	150	07

A49618520

Room Number	Room Name	ID_RoomKey	ID_RoomInstKey	Design Criteria	Design Criteria	Design Criteria		Design Criteria	Design Criteria	Occupancy	Occupancy	Temperature	Temperature	Temperature Notes	Temperature	Ventilation	Ventilation	Mechanical Ventilation Notes
				Area Required	Area Designed	Room Perimeter	Layout No.	Zone	Production Group No.	Room in use	Personnel	Winter degC	Summer degC		Relative Humidity%	Extract ac/hr	Supply ac/hr	
NSGH-05-GENWA-001	Acute single bedroom (incl family & clinical support space)	8084	8090	16.5 m²	19.7 m²	18.5 metres	NA-ZF-05-PL-XXX-503	ZF	4	-	1 x Patient 4 x Others	22	26	26oC not to be exceeded for more than 50 hours per annum against CIBSE DSY weather data.	-	-	6	Supply air rate at 40 litres per second 1. Bedroom balanced or negative with respect to the adjoining corridor. 2. Bedroom positive with respect to the en-suite sanitary room
NSGH-05-GENWA-002	NSGH Inpatient En-suite	5986	5991	4.5 m²	5.2 m²	9.4 metres	NA-ZF-05-PL-XXX-503	ZF	4	-	1 x patient 1-2 assistants Intermittent use	22	None	-	-	10	-	-
NSGH-05-GENWA-003	NSGH Inpatient En-suite	5987	5992	4.5 m²	5.2 m²	9.4 metres	NA-ZF-05-PL-XXX-503	ZF	4	-	1 x patient 1-2 assistants Intermittent use	22	None	-	-	10	-	-
NSGH-05-GENWA-004	Acute single bedroom (incl family & clinical support space)	5936	5941	16.5 m²	16.7 m²	16.8 metres	NA-ZF-05-PL-XXX-503	ZF	4	-	1 x Patient 4 x Others	22	26	26oC not to be exceeded for more than 50 hours per annum against CIBSE DSY weather data.	-	-	6	Supply air rate at 40 litres per second 1. Bedroom balanced or negative with respect to the adjoining corridor. 2. Bedroom positive with respect to the en-suite sanitary room
NSGH-05-GENWA-006	Acute single bedroom (incl family & clinical support space)	5935	5940	16.5 m²	16.6 m²	16.8 metres	NA-ZF-05-PL-XXX-503	ZF	4	-	1 x Patient 4 x Others	22	26	26oC not to be exceeded for more than 50 hours per annum against CIBSE DSY weather data.	-	-	6	Supply air rate at 40 litres per second 1. Bedroom balanced or negative with respect to the adjoining corridor. 2. Bedroom positive with respect to the en-suite sanitary room
NSGH-05-GENWA-007	NSGH Inpatient En-suite	5984	5989	4.5 m²	5.1 m²	9.4 metres	NA-ZF-05-PL-XXX-503	ZF	4	-	1 x patient 1-2 assistants Intermittent use	22	None	-	-	10	-	-
NSGH-05-GENWA-008	NSGH Inpatient En-suite	5973	5978	4.5 m²	5.2 m²	9.4 metres	NA-ZF-05-PL-XXX-503	ZF	4	-	1 x patient 1-2 assistants Intermittent use	22	None	-	-	10	-	-
NSGH-05-GENWA-009	Acute single bedroom (incl family & clinical support space)	5934	5939	16.5 m²	17.1 m²	16.8 metres	NA-ZF-05-PL-XXX-503	ZF	4	-	1 x Patient 4 x Others	22	26	26oC not to be exceeded for more than 50 hours per annum against CIBSE DSY weather data.	-	-	6	Supply air rate at 40 litres per second 1. Bedroom balanced or negative with respect to the adjoining corridor. 2. Bedroom positive with respect to the en-suite sanitary room
NSGH-05-GENWA-010	Acute single bedroom (incl family & clinical support space)	5933	5938	16.5 m²	18.6 m²	17.7 metres	NA-ZF-05-PL-XXX-503	ZF	4	-	1 x Patient 4 x Others	22	26	26oC not to be exceeded for more than 50 hours per annum against CIBSE DSY weather data.	-	-	6	Supply air rate at 40 litres per second 1. Bedroom balanced or negative with respect to the adjoining corridor. 2. Bedroom positive with respect to the en-suite sanitary room
NSGH-05-GENWA-011	NSGH Inpatient En-suite	5972	5977	4.5 m²	5.3 m²	9.6 metres	NA-ZF-05-PL-XXX-503	ZF	4	-	1 x patient 1-2 assistants Intermittent use	22	None	-	-	10	-	-
NSGH-05-GENWA-012	NSGH Inpatient En-suite	5976	5981	4.5 m²	5.3 m²	9.5 metres	NA-ZF-05-PL-XXX-503	ZF	4	-	1 x patient 1-2 assistants Intermittent use	22	None	-	-	10	-	-
NSGH-05-GENWA-013	Acute single bedroom (incl family & clinical support space)	5939	5944	16.5 m²	17.6 m²	17.1 metres	NA-ZF-05-PL-XXX-503	ZF	4	-	1 x Patient 4 x Others	22	26	26oC not to be exceeded for more than 50 hours per annum against CIBSE DSY weather data.	-	-	6	Supply air rate at 40 litres per second 1. Bedroom balanced or negative with respect to the adjoining corridor. 2. Bedroom positive with respect to the en-suite sanitary room
NSGH-05-GENWA-014	Acute single bedroom (incl family & clinical support space)	5938	5943	16.5 m²	17.6 m²	17.1 metres	NA-ZF-05-PL-XXX-503	ZF	4	-	1 x Patient 4 x Others	22	26	26oC not to be exceeded for more than 50 hours per annum against CIBSE DSY weather data.	-	-	6	Supply air rate at 40 litres per second 1. Bedroom balanced or negative with respect to the adjoining corridor. 2. Bedroom positive with respect to the en-suite sanitary room
NSGH-05-GENWA-015	NSGH Inpatient En-suite	5977	5982	4.5 m²	5.3 m²	9.5 metres	NA-ZF-05-PL-XXX-503	ZF	4	-	1 x patient 1-2 assistants Intermittent use	22	None	-	-	10	-	-
NSGH-05-GENWA-016	NSGH Inpatient En-suite	5975	5980	4.5 m²	5.3 m²	9.6 metres	NA-ZF-05-PL-XXX-504	ZF	4	-	1 x patient 1-2 assistants Intermittent use	22	None	-	-	10	-	-
NSGH-05-GENWA-017	Acute single bedroom (incl family & clinical support space)	5958	5963	16.5 m²	17.0 m²	17.1 metres	NA-ZF-05-PL-XXX-504	ZF	4	-	1 x Patient 4 x Others	22	26	26oC not to be exceeded for more than 50 hours per annum against CIBSE DSY weather data.	-	-	6	Supply air rate at 40 litres per second 1. Bedroom balanced or negative with respect to the adjoining corridor. 2. Bedroom positive with respect to the en-suite sanitary room
NSGH-05-GENWA-019	Acute single bedroom (incl family & clinical support space)	5940	5945	16.5 m²	17.0 m²	17.1 metres	NA-ZF-05-PL-XXX-504	ZF	4	-	1 x Patient 4 x Others	22	26	26oC not to be exceeded for more than 50 hours per annum against CIBSE DSY weather data.	-	-	6	Supply air rate at 40 litres per second 1. Bedroom balanced or negative with respect to the adjoining corridor. 2. Bedroom positive with respect to the en-suite sanitary room
NSGH-05-GENWA-020	NSGH Inpatient En-suite	5978	5983	4.5 m²	5.3 m²	9.6 metres	NA-ZF-05-PL-XXX-504	ZF	4	-	1 x patient 1-2 assistants Intermittent use	22	None	-	-	10	-	-
NSGH-05-GENWA-021	NSGH Inpatient En-suite	5979	5984	4.5 m²	5.3 m²	9.5 metres	NA-ZF-05-PL-XXX-504	ZF	4	-	1 x patient 1-2 assistants Intermittent use	22	None	-	-	10	-	-
NSGH-05-GENWA-022	Acute single bedroom (incl family & clinical support space)	5947	5952	16.5 m²	17.7 m²	17.1 metres	NA-ZF-05-PL-XXX-504	ZF	4	-	1 x Patient 4 x Others	22	26	26oC not to be exceeded for more than 50 hours per annum against CIBSE DSY weather data.	-	-	6	Supply air rate at 40 litres per second 1. Bedroom balanced or negative with respect to the adjoining corridor. 2. Bedroom positive with respect to the en-suite sanitary room
NSGH-05-GENWA-023	Acute single bedroom (incl family & clinical support space)	5932	5937	16.5 m²	17.4 m²	17.1 metres	NA-ZF-05-PL-XXX-504	ZF	4	-	1 x Patient 4 x Others	22	26	26oC not to be exceeded for more than 50 hours per annum against CIBSE DSY weather data.	-	-	6	Supply air rate at 40 litres per second 1. Bedroom balanced or negative with respect to the adjoining corridor. 2. Bedroom positive with respect to the en-suite sanitary room
NSGH-05-GENWA-024	NSGH Inpatient En-suite	5981	5986	4.5 m²	5.3 m²	9.5 metres	NA-ZF-05-PL-XXX-504	ZF	4	-	1 x patient 1-2 assistants Intermittent use	22	None	-	-	10	-	-
NSGH-05-GENWA-025	NSGH Inpatient En-suite	5980	5985	4.5 m²	5.3 m²	9.6 metres	NA-ZF-05-PL-XXX-504	ZF	4	-	1 x patient 1-2 assistants Intermittent use	22	None	-	-	10	-	-
NSGH-05-GENWA-026	Acute single bedroom (incl family & clinical support space)	5957	5962	16.5 m²	17.0 m²	17.1 metres	NA-ZF-05-PL-XXX-504	ZF	4	-	1 x Patient 4 x Others	22	26	26oC not to be exceeded for more than 50 hours per annum against CIBSE DSY weather data.	-	-	6	Supply air rate at 40 litres per second 1. Bedroom balanced or negative with respect to the adjoining corridor. 2. Bedroom positive with respect to the en-suite sanitary room
NSGH-05-GENWA-028	Acute single bedroom (incl family & clinical support space)	5956	5961	16.5 m²	16.9 m²	17.1 metres	NA-ZF-05-PL-XXX-504	ZF	4	-	1 x Patient 4 x Others	22	26	26oC not to be exceeded for more than 50 hours per annum against CIBSE DSY weather data.	-	-	6	Supply air rate at 40 litres per second 1. Bedroom balanced or negative with respect to the adjoining corridor. 2. Bedroom positive with respect to the en-suite sanitary room
NSGH-05-GENWA-029	NSGH Inpatient En-suite	5983	5988	4.5 m²	5.3 m²	9.6 metres	NA-ZF-05-PL-XXX-504	ZF	4	-	1 x patient 1-2 assistants Intermittent use	22	None	-	-	10	-	-
NSGH-05-GENWA-030	NSGH Inpatient En-suite	5982	5987	4.5 m²	5.3 m²	9.5 metres	NA-ZF-05-PL-XXX-504	ZF	4	-	1 x patient 1-2 assistants Intermittent use	22	None	-	-	10	-	-
NSGH-05-GENWA-031	Acute single bedroom (incl family & clinical support space)	5955	5960	16.5 m²	17.6 m²	17.0 metres	NA-ZF-05-PL-XXX-504	ZF	4	-	1 x Patient 4 x Others	22	26	26oC not to be exceeded for more than 50 hours per annum against CIBSE DSY weather data.	-	-	6	Supply air rate at 40 litres per second 1. Bedroom balanced or negative with respect to the adjoining corridor. 2. Bedroom positive with respect to the en-suite sanitary room
NSGH-05-GENWA-033	Acute single bedroom (incl family & clinical support space)	5953	5958	16.5 m²	19.0 m²	18.3 metres	NA-ZF-05-PL-XXX-504	ZF	4	-	1 x Patient 4 x Others	22	26	26oC not to be exceeded for more than 50 hours per annum against CIBSE DSY weather data.	-	-	6	Supply air rate at 40 litres per second 1. Bedroom balanced or negative with respect to the adjoining corridor. 2. Bedroom positive with respect to the en-suite sanitary room
NSGH-05-GENWA-034	NSGH Inpatient En-suite	5959	5964	4.5 m²	6.4 m²	10.0 metres	NA-ZF-05-PL-XXX-504	ZF	4	-	1 x patient 1-2 assistants Intermittent use	22	None	-	-	10	-	-
NSGH-05-GENWA-035	Acute single bedroom (incl family & clinical support space)	5952	5957	16.5 m²	17.1 m²	16.8 metres	NA-ZF-05-PL-XXX-504	ZF	4	-	1 x Patient 4 x Others	22	26	26oC not to be exceeded for more than 50 hours per annum against CIBSE DSY weather data.	-	-	6	Supply air rate at 40 litres per second 1. Bedroom balanced or negative with respect to the adjoining corridor. 2. Bedroom positive with respect to the en-suite sanitary room
NSGH-05-GENWA-036	NSGH Inpatient En-suite	5960	5965	4.5 m²	5.3 m²	9.5 metres	NA-ZF-05-PL-XXX-504	ZF	4	-	1 x patient 1-2 assistants Intermittent use	22	None	-	-	10	-	-
NSGH-05-GENWA-037	NSGH Inpatient En-suite	5961	5966	4.5 m²	5.3 m²	9.5 metres	NA-ZF-05-PL-XXX-504	ZF	4	-	1 x patient 1-2 assistants Intermittent use	22	None	-	-	10	-	-
NSGH-05-GENWA-038	Acute single bedroom (incl family & clinical support space)	5951	5956	16.5 m²	16.9 m²	17.1 metres	NA-ZF-05-PL-XXX-504	ZF	4	-	1 x Patient 4 x Others	22	26	26oC not to be exceeded for more than 50 hours per annum against CIBSE DSY weather data.	-	-	6	Supply air rate at 40 litres per second 1. Bedroom balanced or negative with respect to the adjoining corridor. 2. Bedroom positive with respect to the en-suite sanitary room
NSGH-05-GENWA-040	Acute single bedroom (incl family & clinical support space)	5950	5955	16.5 m²	16.9 m²	17.1 metres	NA-ZF-05-PL-XXX-504	ZF	4	-	1 x Patient 4 x Others	22	26	26oC not to be exceeded for more than 50 hours per annum against CIBSE DSY weather data.	-	-	6	Supply air rate at 40 litres per second 1. Bedroom balanced or negative with respect to the adjoining corridor. 2. Bedroom positive with respect to the en-suite sanitary room
NSGH-05-GENWA-041	NSGH Inpatient En-suite	5962	5967	4.5 m²	5.3 m²	9.5 metres	NA-ZF-05-PL-XXX-504	ZF	4	-	1 x patient 1-2 assistants Intermittent use	22	None	-	-	10	-	-
NSGH-05-GENWA-042	NSGH Inpatient En-suite	5963	5968	4.5 m²	5.3 m²	9.5 metres	NA-ZF-05-PL-XXX-504	ZF	4	-	1 x patient 1-2 assistants Intermittent use	22	None	-	-	10	-	-
NSGH-05-GENWA-043	Acute single bedroom (incl family & clinical support space)	5949	5954	16.5 m²	17.4 m²	17.1 metres	NA-ZF-05-PL-XXX-504	ZF	4	-	1 x Patient 4 x Others	22	26	26oC not to be exceeded for more than 50 hours per annum against CIBSE DSY weather data.	-	-	6	Supply air rate at 40 litres per second 1. Bedroom balanced or negative with respect to the adjoining corridor. 2. Bedroom positive with respect to the en-suite sanitary room
NSGH-05-GENWA-044	Acute single bedroom (incl family & clinical support space)	5941	5946	16.5 m²	17.6 m²	17.1 metres	NA-ZF-05-PL-XXX-504	ZF	4	-	1 x Patient 4 x Others	22	26	26oC not to be exceeded for more than 50 hours per annum against CIBSE DSY weather data.	-	-	6	Supply air rate at 40 litres per second 1. Bedroom balanced or negative with respect to the adjoining corridor. 2. Bedroom positive with respect to the en-suite sanitary room
NSGH-05-GENWA-045	NSGH Inpatient En-suite	5965	5970	4.5 m²	5.3 m²	9.5 metres	NA-ZF-05-PL-XXX-504	ZF	4	-	1 x patient 1-2 assistants Intermittent use	22	None	-	-	10	-	-
NSGH-05-GENWA-046	NSGH Inpatient En-suite	5964	5969	4.5 m²	5.3 m²	9.5 metres	NA-ZF-05-PL-XXX-504	ZF	4	-	1 x patient 1-2 assistants Intermittent use	22	None	-	-	10	-	-
NSGH-05-GENWA-047	Acute single bedroom (incl family & clinical support space)	5948	5953	16.5 m²	16.9 m²	17.5 metres	NA-ZF-05-PL-XXX-504	ZF	4	-	1 x Patient 4 x Others	22	26	26oC not to be exceeded for more than 50 hours per annum against CIBSE DSY weather data.	-	-	6	Supply air rate at 40 litres per second 1. Bedroom balanced or negative with respect to the adjoining corridor. 2. Bedroom positive with respect to the en-suite sanitary room
NSGH-05-GENWA-049	Acute single bedroom (incl family & clinical support space)	5942	5947	16.5 m²	17.0 m²	17.1 metres	NA-ZF-05-PL-XXX-504	ZF	4	-	1 x Patient 4 x Others	22	26	26oC not to be exceeded for more than 50 hours per annum against CIBSE DSY weather data.	-	-	6	Supply air rate at 40 litres per second 1. Bedroom balanced or negative with respect to the adjoining corridor. 2. Bedroom positive with respect to the en-suite sanitary room
NSGH-05-GENWA-050	NSGH Inpatient En-suite	5966	5971	4.5 m²	5.3 m²	9.5 metres	NA-ZF-05-PL-XXX-504	ZF	4	-	1 x patient 1-2 assistants Intermittent use	22	None	-	-	10	-	-
NSGH-05-GENWA-051	NSGH Inpatient En-suite	5967	5972	4.5 m²	5.3 m²	9.5 metres	NA-ZF-05-PL-XXX-505	ZF	4	-	1 x patient 1-2 assistants Intermittent use	22	None	-	-	10	-	-
NSGH-05-GENWA-052	Acute single bedroom (incl family & clinical support space)	5946	5951	16.5 m²	17.7 m²	17.3 metres	NA-ZF-05-PL-XXX-505	ZF	4	-	1 x Patient 4 x Others	22	26	26oC not to be exceeded for more than 50 hours per annum against CIBSE DSY weather data.	-	-	6	Supply air rate at 40 litres per second 1. Bedroom balanced or negative with respect to the adjoining corridor. 2. Bedroom positive with respect to the en-suite sanitary room

NSGH-05-GENWA-053	Acute single bedroom (incl family & clinical support space)	5954	5959	16.5 m²	19.9 m²	18.3 metres	NA-ZF-05-PL-XXX-505	ZF	4	-	1 x Patient 4 x Others	22	26	26oC not to be exceeded for more than 50 hours per annum against CIBSE DSY weather data.	-	-	6	Supply air rate at 40 litres per second 1. Bedroom balanced or negative with respect to the adjoining corridor. 2. Bedroom positive with respect to the en-suite sanitary room
NSGH-05-GENWA-056	NSGH Inpatient En-suite	5971	5976	4.5 m²	5.3 m²	9.6 metres	NA-ZF-05-PL-XXX-505	ZF	4	-	1 x patient 1-2 assistants Intermittent use	22	None	-	-	10	-	-
NSGH-05-GENWA-057	Acute single bedroom (incl family & clinical support space)	5945	5950	16.5 m²	17.0 m²	16.8 metres	NA-ZF-05-PL-XXX-505	ZF	4	-	1 x Patient 4 x Others	22	26	26oC not to be exceeded for more than 50 hours per annum against CIBSE DSY weather data.	-	-	6	Supply air rate at 40 litres per second 1. Bedroom balanced or negative with respect to the adjoining corridor. 2. Bedroom positive with respect to the en-suite sanitary room
NSGH-05-GENWA-058	NSGH Inpatient En-suite	5969	5974	4.5 m²	5.1 m²	9.4 metres	NA-ZF-05-PL-XXX-505	ZF	4	-	1 x patient 1-2 assistants Intermittent use	22	None	-	-	10	-	-
NSGH-05-GENWA-059	NSGH Inpatient En-suite	5968	5973	4.5 m²	5.1 m²	9.4 metres	NA-ZF-05-PL-XXX-505	ZF	4	-	1 x patient 1-2 assistants Intermittent use	22	None	-	-	10	-	-
NSGH-05-GENWA-060	Acute single bedroom (incl family & clinical support space)	5944	5949	16.5 m²	17.1 m²	17.0 metres	NA-ZF-05-PL-XXX-505	ZF	4	-	1 x Patient 4 x Others	22	26	26oC not to be exceeded for more than 50 hours per annum against CIBSE DSY weather data.	-	-	6	Supply air rate at 40 litres per second 1. Bedroom balanced or negative with respect to the adjoining corridor. 2. Bedroom positive with respect to the en-suite sanitary room
NSGH-05-GENWA-062	Acute single bedroom (incl family & clinical support space)	5943	5948	16.5 m²	17.1 m²	17.0 metres	NA-ZF-05-PL-XXX-505	ZF	4	-	1 x Patient 4 x Others	22	26	26oC not to be exceeded for more than 50 hours per annum against CIBSE DSY weather data.	-	-	6	Supply air rate at 40 litres per second 1. Bedroom balanced or negative with respect to the adjoining corridor. 2. Bedroom positive with respect to the en-suite sanitary room
NSGH-05-GENWA-063	NSGH Inpatient En-suite	5970	5975	4.5 m²	5.1 m²	9.4 metres	NA-ZF-05-PL-XXX-505	ZF	4	-	1 x patient 1-2 assistants Intermittent use	22	None	-	-	10	-	-
NSGH-05-GENWA-064	NSGH Inpatient En-suite	5974	5979	4.5 m²	5.1 m²	9.4 metres	NA-ZF-05-PL-XXX-505	ZF	4	-	1 x patient 1-2 assistants Intermittent use	22	None	-	-	10	-	-
NSGH-05-GENWA-065	Acute single bedroom (incl family & clinical support space)	5985	5990	16.5 m²	17.0 m²	16.8 metres	NA-ZF-05-PL-XXX-505	ZF	4	-	1 x Patient 4 x Others	22	26	26oC not to be exceeded for more than 50 hours per annum against CIBSE DSY weather data.	-	-	6	Supply air rate at 40 litres per second 1. Bedroom balanced or negative with respect to the adjoining corridor. 2. Bedroom positive with respect to the en-suite sanitary room
NSGH-05-GENWA-005	Touch Down Spaces	5990	5995	2.0 m²	1.8 m²	5.8 metres	NA-ZF-05-PL-XXX-503	ZF	4	-	1 x Staff	21	None	-	-	-	-	Supply air to balance extract from other areas
NSGH-05-GENWA-018	Touch Down Spaces	5995	6000	2.0 m²	1.8 m²	5.8 metres	NA-ZF-05-PL-XXX-504	ZF	4	-	1 x Staff	21	None	-	-	-	-	Supply air to balance extract from other areas
NSGH-05-GENWA-027	Touch Down Spaces	5999	6004	2.0 m²	1.8 m²	5.8 metres	NA-ZF-05-PL-XXX-504	ZF	4	-	1 x Staff	21	None	-	-	-	-	Supply air to balance extract from other areas
NSGH-05-GENWA-039	Touch Down Spaces	5998	6003	2.0 m²	1.8 m²	5.8 metres	NA-ZF-05-PL-XXX-504	ZF	4	-	1 x Staff	21	None	-	-	-	-	Supply air to balance extract from other areas
NSGH-05-GENWA-048	Touch Down Spaces	5997	6002	0.0 m²	1.8 m²	5.8 metres	NA-ZF-05-PL-XXX-504	ZF	4	-	1 x Staff	21	None	-	-	-	-	Supply air to balance extract from other areas
NSGH-05-GENWA-061	Touch Down Spaces	5996	6001	0.0 m²	1.8 m²	5.8 metres	NA-ZF-05-PL-XXX-505	ZF	4	-	1 x Staff	21	None	-	-	-	-	Supply air to balance extract from other areas
NSGH-05-GENWA-071	Interview/sitting room	5988	5993	9.0 m²	9.2 m²	12.7 metres	NA-ZF-05-PL-XXX-505	ZF	4	-	Up to 4 persons	21	26	26oC not to be exceeded for more than 50 hours per annum against CIBSE DSY weather data.	-	-	-	Air volume to suit occupancy at 10 litres per second per person
NSGH-05-GENWA-072	Resuscitation trolley parking bay: 1 trolley	5991	5996	2.0 m²	2.0 m²	6.5 metres	NA-ZF-05-PL-XXX-505	ZF	4	-	1 x Staff Intermittent use	16	None	-	-	-	-	-
NSGH-05-GENWA-073	Nurses Station & Reception - 2 position - open	5989	5994	12.0 m²	17.7 m²	22.8 metres	NA-ZF-05-PL-XXX-503	ZF	4	-	2 x Staff	21	26	26oC not to be exceeded for more than 50 hours per annum against CIBSE DSY weather data.	-	-	-	Air volume to suit occupancy at 10 litres per second per person
NSGH-05-GENWA-077	Pantry/Beverage making area	5992	5997	12.0 m²	14.6 metres	NA-ZF-05-PL-XXX-503	ZF	4	-	Intermittent use	18	None	-	-	6	5	Minimum air changes per hour (AC/hr): 6	
NSGH-05-GENWA-078	Ward Food trolley parking bay	5993	5998	1.5 m²	1.7 m²	6.2 metres	NA-ZF-05-PL-XXX-503	ZF	4	-	Intermittent use	16	None	-	-	-	-	-
NSGH-05-GENWA-084	Wheelchair bay	5994	5999	4.0 m²	4.7 m²	10.3 metres	NA-ZF-05-PL-XXX-504	ZF	4	-	-	16	None	-	-	-	-	-
NSGH-05-GENWA-075	Equipment Bay L	6002	6007	1.5 m²	1.7 m²	5.5 metres	NA-ZF-05-PL-XXX-503	ZF	4	-	-	16	None	-	-	-	-	-
NSGH-05-GENWA-076	Large Eqpt Store	6001	6006	7.5 m²	7.1 m²	12.8 metres	NA-ZF-05-PL-XXX-503	ZF	4	-	1 x Staff Intermittent use	16	None	-	-	-	1.5	Mechanical ventilation (supply): Mechanical ventilation required if internal location.
NSGH-05-GENWA-081	Clean Utility Room & Clinical Store/Controlled drug Cupboard & Clinical supplies trolley	6000	6005	15.0 m²	17.3 m²	17.4 metres	NA-ZF-05-PL-XXX-504	ZF	4	-	2 x Staff	20	25	-	-	-	6	-
NSGH-05-GENWA-054	Switchgear cupboard	6008	6013	1.0 m²	2.2 m²	7.9 metres	NA-ZF-05-PL-XXX-505	ZF	4	-	N/A	None	None	-	-	-	-	-
NSGH-05-GENWA-055	Elect/ IT cupboard RE31	6015	6020	0.0 m²	5.0 m²	9.2 metres	NA-ZF-05-PL-XXX-505	ZF	4			None	None					
NSGH-05-GENWA-066	Cleaners room	6005	6010	7.0 m²	7.7 m²	11.2 metres	NA-ZF-05-PL-XXX-505	ZF	4	-	2 x Staff Intermittent use	16	None	-	-	6	-	-
NSGH-05-GENWA-068	Mechanical Riser T12	6009	6014	0.0 m²	29.3 m²	27.8 metres	NA-ZF-05-PL-XXX-505	ZF	4			None	None					
NSGH-05-GENWA-074	Corridor	6012	6017	0.0 m²	61.6 m²	57.4 metres	NA-ZF-05-PL-XXX-503	ZF	4			18	None					
NSGH-05-GENWA-074_1	Lobby	7939	7944	0.0 m²	5.8 m²	9.7 metres	NA-ZF-05-PL-XXX-503	ZF	4			18	None					
NSGH-05-GENWA-079	Dirty utility/Sluice/Test Room - small	6006	6011	6.5 m²	8.1 m²	12.5 metres	NA-ZF-05-PL-XXX-504	ZF	4	-	2 x Staff Intermittent use	18	None	-	-	10	-	-
NSGH-05-GENWA-080	Dirty utility/Disposal hold	6003	6008	8.0 m²	7.5 m²	11.9 metres	NA-ZF-05-PL-XXX-504	ZF	4	-	1 x Staff Intermittent use	18	None	-	-	10	-	-
NSGH-05-GENWA-082	Mechanical Riser T11	6010	6015	0.0 m²	14.1 m²	17.3 metres	NA-ZF-05-PL-XXX-504	ZF	4			None	None					
NSGH-05-GENWA-083	Disabled WC Staff	6007	6012	2.0 m²	5.5 m²	9.9 metres	NA-ZF-05-PL-XXX-504	ZF	4	-	1 x Person Intermittent use	20	None	-	-	10	-	-
NSGH-05-GENWA-085	Electrical Riser RE32	6004	6009	0.0 m²	2.4 m²	6.8 metres	NA-ZF-05-PL-XXX-504	ZF	4	-	N/A	None	None	-	-	-	-	-
NSGH-05-GENWA-086	Electrical Cupboard	6014	6019	0.0 m²	1.7 m²	6.3 metres	NA-ZF-05-PL-XXX-504	ZF	4			None	None					
NSGH-05-GENWA-087	Corridor	6011	6016	0.0 m²	78.7 m²	69.4 metres	NA-ZF-05-PL-XXX-504	ZF	4			18	None					
NSGH-05-GENWA-087_1	Corridor	8236	8242	0.0 m²	51.5 m²	49.5 metres	NA-ZF-05-PL-XXX-504	ZF	4			18	None					
NSGH-05-GENWA-088	Corridor	6013	6018	0.0 m²	72.7 m²	66.6 metres	NA-ZF-05-PL-XXX-505	ZF	4			18	None					
NSGH-05-GENWA-089	Corridor	6016	6021	0.0 m²	42.7 m²	45.0 metres	NA-ZF-05-PL-XXX-503	ZF	4			18	None					
NSGH-05-GENWA-090	Corridor	6017	6022	0.0 m²	34.6 m²	35.4 metres	NA-ZF-05-PL-XXX-505	ZF	4			18	None					
NSGH-05-GENWA-067	Printer/IT/Admin Store Room	6019	6024	6.0 m²	5.8 m²	9.9 metres	NA-ZF-05-PL-XXX-505	ZF	4	-	-	16	None	-	-	1.5	-	-
NSGH-05-GENWA-069	Charge Nurse/Sister s Office (2P)	6018	6023	9.0 m²	8.7 m²	12.0 metres	NA-ZF-05-PL-XXX-505	ZF	4	-	1 x Staff 3 x Others	21	26	26oC not to be exceeded for more than 50 hours per annum against CIBSE DSY weather data.	-	-	-	Air volume to suit occupancy at 10 litres per second per person
NSGH-05-GENWA-070	Office (1P) + meeting area	6020	6025	12.0 m²	12.0 m²	14.1 metres	NA-ZF-05-PL-XXX-505	ZF	4	-	Up to 7 persons	21	26	26oC not to be exceeded for more than 50 hours per annum against CIBSE DSY weather data.	-	-	-	Air volume to suit occupancy at 10 litres per second per person
NSGH-05-GENWA-032	Socialisation Space	6021	6026	24.0 m²	25.1 m²	21.6 metres	NA-ZF-05-PL-XXX-504	ZF	4	-	20 xpatients	22	26	26oC not to be exceeded for more than 50 hours per annum against CIBSE DSY weather data.	-	-	-	Air volume to suit occupancy at 10 litres per second per person
NSGH-05-GENWB-001	Acute single bedroom (incl family & clinical support space)	6048	6053	16.5 m²	19.8 m²	17.9 metres	NA-ZJ-05-PL-XXX-508	ZJ	4	-	1 x Patient 4 x Others	22	26	26oC not to be exceeded for more than 50 hours per annum against CIBSE DSY weather data.	-	-	6	Supply air rate at 40 litres per second 1. Bedroom balanced or negative with respect to the adjoining corridor. 2. Bedroom positive with respect to the en-suite sanitary room
NSGH-05-GENWB-002	NSGH Inpatient En-suite	6077	6082	4.5 m²	5.2 m²	9.4 metres	NA-ZJ-05-PL-XXX-508	ZJ	4	-	1 x patient 1-2 assistants Intermittent use	22	None	-	-	10	-	-
NSGH-05-GENWB-003	NSGH Inpatient En-suite	6051	6056	4.5 m²	5.1 m²	9.4 metres	NA-ZJ-05-PL-XXX-508	ZJ	4	-	1 x patient 1-2 assistants Intermittent use	22	None	-	-	10	-	-
NSGH-05-GENWB-004	Acute single bedroom (incl family & clinical support space)	6047	6052	16.5 m²	16.7 m²	16.8 metres	NA-ZJ-05-PL-XXX-508	ZJ	4	-	1 x Patient 4 x Others	22	26	26oC not to be exceeded for more than 50 hours per annum against CIBSE DSY weather data.	-	-	6	Supply air rate at 40 litres per second 1. Bedroom balanced or negative with respect to the adjoining corridor. 2. Bedroom positive with respect to the en-suite sanitary room
NSGH-05-GENWB-006	Acute single bedroom (incl family & clinical support space)	6046	6051	16.5 m²	16.6 m²	17.2 metres	NA-ZJ-05-PL-XXX-508	ZJ	4	-	1 x Patient 4 x Others	22	26	26oC not to be exceeded for more than 50 hours per annum against CIBSE DSY weather data.	-	-	6	Supply air rate at 40 litres per second 1. Bedroom balanced or negative with respect to the adjoining corridor. 2. Bedroom positive with respect to the en-suite sanitary room
NSGH-05-GENWB-007	NSGH Inpatient En-suite	6064	6069	4.5 m²	5.0 m²	9.4 metres	NA-ZJ-05-PL-XXX-508	ZJ	4	-	1 x patient 1-2 assistants Intermittent use	22	None	-	-	10	-	-
NSGH-05-GENWB-008	NSGH Inpatient En-suite	6053	6058	4.5 m²	5.2 m²	9.4 metres	NA-ZJ-05-PL-XXX-508	ZJ	4	-	1 x patient 1-2 assistants Intermittent use	22	None	-	-	10	-	-
NSGH-05-GENWB-009	Acute single bedroom (incl family & clinical support space)	6044	6049	16.5 m²	17.2 m²	16.8 metres	NA-ZJ-05-PL-XXX-508	ZJ	4	-	1 x Patient 4 x Others	22	26	26oC not to be exceeded for more than 50 hours per annum against CIBSE DSY weather data.	-	-	6	Supply air rate at 40 litres per second 1. Bedroom balanced or negative with respect to the adjoining corridor. 2. Bedroom positive with respect to the en-suite sanitary room
NSGH-05-GENWB-010	Acute single bedroom (incl family & clinical support space)	6045	6050	16.5 m²	18.6 m²	17.7 metres	NA-ZJ-05-PL-XXX-508	ZJ	4	-	1 x Patient 4 x Others	22	26	26oC not to be exceeded for more than 50 hours per annum against CIBSE DSY weather data.	-	-	6	Supply air rate at 40 litres per second 1. Bedroom balanced or negative with respect to the adjoining corridor. 2. Bedroom positive with respect to the en-suite sanitary room
NSGH-05-GENWB-011	NSGH Inpatient En-suite	6052	6057	4.5 m²	5.3 m²	9.5 metres	NA-ZJ-05-PL-XXX-508	ZJ	4	-	1 x patient 1-2 assistants Intermittent use	22	None	-	-	10	-	-
NSGH-05-GENWB-012	NSGH Inpatient En-suite	6054	6059	4.5 m²	5.3 m²	9.5 metres	NA-ZJ-05-PL-XXX-508	ZJ	4	-	1 x patient 1-2 assistants Intermittent use	22	None	-	-	10	-	-
NSGH-05-GENWB-013	Acute single bedroom (incl family & clinical support space)	6043	6048	16.5 m²	17.6 m²	17.1 metres	NA-ZJ-05-PL-XXX-508	ZJ	4	-	1 x Patient 4 x Others	22	26	26oC not to be exceeded for more than 50 hours per annum against CIBSE DSY weather data.	-	-	6	Supply air rate at 40 litres per second 1. Bedroom balanced or negative with respect to the adjoining corridor. 2. Bedroom positive with respect to the en-suite sanitary room
NSGH-05-GENWB-014	Acute single bedroom (incl family & clinical support space)	6041	6046	16.5 m²	17.6 m²	17.1 metres	NA-ZJ-05-PL-XXX-508	ZJ	4	-	1 x Patient 4 x Others	22	26	26oC not to be exceeded for more than 50 hours per annum against CIBSE DSY weather data.	-	-	6	Supply air rate at 40 litres per second 1. Bedroom balanced or negative with respect to the adjoining corridor. 2. Bedroom positive with respect to the en-suite sanitary room
NSGH-05-GENWB-015	NSGH Inpatient En-suite	6055	6060	4.5 m²	5.3 m²	9.5 metres	NA-ZJ-05-PL-XXX-508	ZJ	4	-	1 x patient 1-2 assistants Intermittent use	22	None	-	-	10	-	-
NSGH-05-GENWB-016	NSGH Inpatient En-suite	6056	6061	4.5 m²	5.3 m²	9.5 metres	NA-ZJ-05-PL-XXX-507	ZJ	4	-	1 x patient 1-2 assistants Intermittent use	22	None	-	-	10	-	-
NSGH-05-GENWB-017	Acute single bedroom (incl family & clinical support space)	6049	6054	16.5 m²	17.0 m²	17.1 metres	NA-ZJ-05-PL-XXX-507	ZJ	4	-	1 x Patient 4 x Others	22	26	26oC not to be exceeded for more than 50 hours per annum against CIBSE DSY weather data.	-	-	6	Supply air rate at 40 litres per second 1. Bedroom balanced or negative with respect to the adjoining corridor. 2. Bedroom positive with respect to the en-suite sanitary room
NSGH-05-GENWB-019	Acute single bedroom (incl family & clinical support space)	6028	6033	16.5 m²	16.9 m²	17.1 metres	NA-ZJ-05-PL-XXX-507	ZJ	4	-	1 x Patient 4 x Others	22	26	26oC not to be exceeded for more than 50 hours per annum against CIBSE DSY weather data.	-	-	6	Supply air rate at 40 litres per second 1. Bedroom balanced or negative with respect to the adjoining corridor. 2. Bedroom positive with respect to the en-suite sanitary room
NSGH-05-GENWB-020	NSGH Inpatient En-suite	6058	6063	4.5 m²	5.3 m²	9.6 metres	NA-ZJ-05-PL-XXX-507	ZJ	4	-	1 x patient 1-2 assistants Intermittent use	22	None	-	-	10	-	-
NSGH-05-GENWB-021	NSGH Inpatient En-suite	6057	6062	4.5 m²	5.3 m²	9.5 metres	NA-ZJ-05-PL-XXX-507	ZJ	4	-	1 x patient 1-2 assistants Intermittent use	22	None	-	-	10	-	-
NSGH-05-GENWB-022	Acute single bedroom (incl family & clinical support space)	6039	6044	16.5 m²	17.7 m²	17.1 metres	NA-ZJ-05-PL-XXX-507	ZJ	4	-	1 x Patient 4 x Others	22	26	26oC not to be exceeded for more than 50 hours per annum against CIBSE DSY weather data.	-	-	6	Supply air rate at 40 litres per second 1. Bedroom balanced or negative with respect to the adjoining corridor. 2. Bedroom positive with respect to the en-suite sanitary room

NSGH-05-GENWB-023	Acute single bedroom (incl family & clinical support space)	6038	6043	16.5 m²	17.7 m²	17.1 metres	NA-ZJ-05-PL-XXX-507	ZJ	4	-	1 x Patient 4 x Others	22	26	26oC not to be exceeded for more than 50 hours per annum against CIBSE DSY weather data.	-	-	6	Supply air rate at 40 litres per second 1. Bedroom balanced or negative with respect to the adjoining corridor. 2. Bedroom positive with respect to the en-suite sanitary room
NSGH-05-GENWB-024	NSGH Inpatient En-suite	6059	6064	4.5 m²	5.3 m²	9.5 metres	NA-ZJ-05-PL-XXX-507	ZJ	4	-	1 x patient 1-2 assistants Intermittent use	22	None	-	-	10	-	-
NSGH-05-GENWB-025	NSGH Inpatient En-suite	6060	6065	4.5 m²	5.3 m²	9.6 metres	NA-ZJ-05-PL-XXX-507	ZJ	4	-	1 x patient 1-2 assistants Intermittent use	22	None	-	-	10	-	-
NSGH-05-GENWB-026	Acute single bedroom (incl family & clinical support space)	6037	6042	16.5 m²	17.0 m²	17.1 metres	NA-ZJ-05-PL-XXX-507	ZJ	4	-	1 x Patient 4 x Others	22	26	26oC not to be exceeded for more than 50 hours per annum against CIBSE DSY weather data.	-	-	6	Supply air rate at 40 litres per second 1. Bedroom balanced or negative with respect to the adjoining corridor. 2. Bedroom positive with respect to the en-suite sanitary room
NSGH-05-GENWB-028	Acute single bedroom (incl family & clinical support space)	6036	6041	16.5 m²	17.0 m²	17.1 metres	NA-ZJ-05-PL-XXX-507	ZJ	4	-	1 x Patient 4 x Others	22	26	26oC not to be exceeded for more than 50 hours per annum against CIBSE DSY weather data.	-	-	6	Supply air rate at 40 litres per second 1. Bedroom balanced or negative with respect to the adjoining corridor. 2. Bedroom positive with respect to the en-suite sanitary room
NSGH-05-GENWB-029	NSGH Inpatient En-suite	6065	6070	4.5 m²	5.3 m²	9.6 metres	NA-ZJ-05-PL-XXX-507	ZJ	4	-	1 x patient 1-2 assistants Intermittent use	22	None	-	-	10	-	-
NSGH-05-GENWB-030	NSGH Inpatient En-suite	6066	6071	4.5 m²	5.3 m²	9.5 metres	NA-ZJ-05-PL-XXX-507	ZJ	4	-	1 x patient 1-2 assistants Intermittent use	22	None	-	-	10	-	-
NSGH-05-GENWB-031	Acute single bedroom (incl family & clinical support space)	6035	6040	16.5 m²	17.6 m²	17.1 metres	NA-ZJ-05-PL-XXX-507	ZJ	4	-	1 x Patient 4 x Others	22	26	26oC not to be exceeded for more than 50 hours per annum against CIBSE DSY weather data.	-	-	6	Supply air rate at 40 litres per second 1. Bedroom balanced or negative with respect to the adjoining corridor. 2. Bedroom positive with respect to the en-suite sanitary room
NSGH-05-GENWB-033	Acute single bedroom (incl family & clinical support space)	6033	6038	16.5 m²	19.0 m²	18.4 metres	NA-ZJ-05-PL-XXX-507	ZJ	4	-	1 x Patient 4 x Others	22	26	26oC not to be exceeded for more than 50 hours per annum against CIBSE DSY weather data.	-	-	6	Supply air rate at 40 litres per second 1. Bedroom balanced or negative with respect to the adjoining corridor. 2. Bedroom positive with respect to the en-suite sanitary room
NSGH-05-GENWB-034	NSGH Inpatient En-suite	6067	6072	4.5 m²	6.3 m²	10.0 metres	NA-ZJ-05-PL-XXX-507	ZJ	4	-	1 x patient 1-2 assistants Intermittent use	22	None	-	-	10	-	-
NSGH-05-GENWB-035	Acute single bedroom (incl family & clinical support space)	6031	6036	16.5 m²	17.1 m²	16.8 metres	NA-ZJ-05-PL-XXX-507	ZJ	4	-	1 x Patient 4 x Others	22	26	26oC not to be exceeded for more than 50 hours per annum against CIBSE DSY weather data.	-	-	6	Supply air rate at 40 litres per second 1. Bedroom balanced or negative with respect to the adjoining corridor. 2. Bedroom positive with respect to the en-suite sanitary room
NSGH-05-GENWB-036	NSGH Inpatient En-suite	6068	6073	4.5 m²	5.3 m²	9.5 metres	NA-ZJ-05-PL-XXX-507	ZJ	4	-	1 x patient 1-2 assistants Intermittent use	22	None	-	-	10	-	-
NSGH-05-GENWB-037	NSGH Inpatient En-suite	6069	6074	4.5 m²	5.3 m²	9.5 metres	NA-ZJ-05-PL-XXX-507	ZJ	4	-	1 x patient 1-2 assistants Intermittent use	22	None	-	-	10	-	-
NSGH-05-GENWB-038	Acute single bedroom (incl family & clinical support space)	6032	6037	16.5 m²	17.0 m²	17.1 metres	NA-ZJ-05-PL-XXX-507	ZJ	4	-	1 x Patient 4 x Others	22	26	26oC not to be exceeded for more than 50 hours per annum against CIBSE DSY weather data.	-	-	6	Supply air rate at 40 litres per second 1. Bedroom balanced or negative with respect to the adjoining corridor. 2. Bedroom positive with respect to the en-suite sanitary room
NSGH-05-GENWB-040	Acute single bedroom (incl family & clinical support space)	6030	6035	16.5 m²	16.8 m²	17.1 metres	NA-ZJ-05-PL-XXX-507	ZJ	4	-	1 x Patient 4 x Others	22	26	26oC not to be exceeded for more than 50 hours per annum against CIBSE DSY weather data.	-	-	6	Supply air rate at 40 litres per second 1. Bedroom balanced or negative with respect to the adjoining corridor. 2. Bedroom positive with respect to the en-suite sanitary room
NSGH-05-GENWB-041	NSGH Inpatient En-suite	6050	6055	4.5 m²	5.3 m²	9.5 metres	NA-ZJ-05-PL-XXX-507	ZJ	4	-	1 x patient 1-2 assistants Intermittent use	22	None	-	-	10	-	-
NSGH-05-GENWB-042	NSGH Inpatient En-suite	6076	6081	4.5 m²	5.3 m²	9.5 metres	NA-ZJ-05-PL-XXX-507	ZJ	4	-	1 x patient 1-2 assistants Intermittent use	22	None	-	-	10	-	-
NSGH-05-GENWB-043	Acute single bedroom (incl family & clinical support space)	6042	6047	16.5 m²	17.7 m²	17.1 metres	NA-ZJ-05-PL-XXX-507	ZJ	4	-	1 x Patient 4 x Others	22	26	26oC not to be exceeded for more than 50 hours per annum against CIBSE DSY weather data.	-	-	6	Supply air rate at 40 litres per second 1. Bedroom balanced or negative with respect to the adjoining corridor. 2. Bedroom positive with respect to the en-suite sanitary room
NSGH-05-GENWB-044	Acute single bedroom (incl family & clinical support space)	6029	6034	16.5 m²	17.6 m²	17.1 metres	NA-ZJ-05-PL-XXX-507	ZJ	4	-	1 x Patient 4 x Others	22	26	26oC not to be exceeded for more than 50 hours per annum against CIBSE DSY weather data.	-	-	6	Supply air rate at 40 litres per second 1. Bedroom balanced or negative with respect to the adjoining corridor. 2. Bedroom positive with respect to the en-suite sanitary room
NSGH-05-GENWB-045	NSGH Inpatient En-suite	6061	6066	4.5 m²	5.3 m²	9.5 metres	NA-ZJ-05-PL-XXX-507	ZJ	4	-	1 x patient 1-2 assistants Intermittent use	22	None	-	-	10	-	-
NSGH-05-GENWB-046	NSGH Inpatient En-suite	6062	6067	4.5 m²	5.3 m²	9.5 metres	NA-ZJ-05-PL-XXX-507	ZJ	4	-	1 x patient 1-2 assistants Intermittent use	22	None	-	-	10	-	-
NSGH-05-GENWB-047	Acute single bedroom (incl family & clinical support space)	6040	6045	16.5 m²	16.9 m²	17.1 metres	NA-ZJ-05-PL-XXX-507	ZJ	4	-	1 x Patient 4 x Others	22	26	26oC not to be exceeded for more than 50 hours per annum against CIBSE DSY weather data.	-	-	6	Supply air rate at 40 litres per second 1. Bedroom balanced or negative with respect to the adjoining corridor. 2. Bedroom positive with respect to the en-suite sanitary room
NSGH-05-GENWB-049	Acute single bedroom (incl family & clinical support space)	6026	6031	16.5 m²	17.0 m²	17.1 metres	NA-ZJ-05-PL-XXX-507	ZJ	4	-	1 x Patient 4 x Others	22	26	26oC not to be exceeded for more than 50 hours per annum against CIBSE DSY weather data.	-	-	6	Supply air rate at 40 litres per second 1. Bedroom balanced or negative with respect to the adjoining corridor. 2. Bedroom positive with respect to the en-suite sanitary room
NSGH-05-GENWB-050	NSGH Inpatient En-suite	6071	6076	4.5 m²	5.3 m²	9.5 metres	NA-ZJ-05-PL-XXX-507	ZJ	4	-	1 x patient 1-2 assistants Intermittent use	22	None	-	-	10	-	-
NSGH-05-GENWB-051	NSGH Inpatient En-suite	6070	6075	4.5 m²	5.3 m²	9.5 metres	NA-ZJ-05-PL-XXX-506	ZJ	4	-	1 x patient 1-2 assistants Intermittent use	22	None	-	-	10	-	-
NSGH-05-GENWB-052	Acute single bedroom (incl family & clinical support space)	6027	6032	16.5 m²	17.6 m²	17.6 metres	NA-ZJ-05-PL-XXX-506	ZJ	4	-	1 x Patient 4 x Others	22	26	26oC not to be exceeded for more than 50 hours per annum against CIBSE DSY weather data.	-	-	6	Supply air rate at 40 litres per second 1. Bedroom balanced or negative with respect to the adjoining corridor. 2. Bedroom positive with respect to the en-suite sanitary room
NSGH-05-GENWB-053	Acute single bedroom (incl family & clinical support space)	6034	6039	16.5 m²	19.7 m²	18.7 metres	NA-ZJ-05-PL-XXX-506	ZJ	4	-	1 x Patient 4 x Others	22	26	26oC not to be exceeded for more than 50 hours per annum against CIBSE DSY weather data.	-	-	6	Supply air rate at 40 litres per second 1. Bedroom balanced or negative with respect to the adjoining corridor. 2. Bedroom positive with respect to the en-suite sanitary room
NSGH-05-GENWB-056	NSGH Inpatient En-suite	6063	6068	4.5 m²	5.4 m²	9.7 metres	NA-ZJ-05-PL-XXX-506	ZJ	4	-	1 x patient 1-2 assistants Intermittent use	22	None	-	-	10	-	-
NSGH-05-GENWB-057	Acute single bedroom (incl family & clinical support space)	6025	6030	16.5 m²	16.9 m²	18.1 metres	NA-ZJ-05-PL-XXX-506	ZJ	4	-	1 x Patient 4 x Others	22	26	26oC not to be exceeded for more than 50 hours per annum against CIBSE DSY weather data.	-	-	6	Supply air rate at 40 litres per second 1. Bedroom balanced or negative with respect to the adjoining corridor. 2. Bedroom positive with respect to the en-suite sanitary room
NSGH-05-GENWB-058	NSGH Inpatient En-suite	6072	6077	4.5 m²	5.2 m²	9.4 metres	NA-ZJ-05-PL-XXX-506	ZJ	4	-	1 x patient 1-2 assistants Intermittent use	22	None	-	-	10	-	-
NSGH-05-GENWB-059	NSGH Inpatient En-suite	6073	6078	4.5 m²	5.1 m²	9.4 metres	NA-ZJ-05-PL-XXX-506	ZJ	4	-	1 x patient 1-2 assistants Intermittent use	22	None	-	-	10	-	-
NSGH-05-GENWB-060	Acute single bedroom (incl family & clinical support space)	6024	6029	16.5 m²	17.0 m²	17.4 metres	NA-ZJ-05-PL-XXX-506	ZJ	4	-	1 x Patient 4 x Others	22	26	26oC not to be exceeded for more than 50 hours per annum against CIBSE DSY weather data.	-	-	6	Supply air rate at 40 litres per second 1. Bedroom balanced or negative with respect to the adjoining corridor. 2. Bedroom positive with respect to the en-suite sanitary room
NSGH-05-GENWB-062	Acute single bedroom (incl family & clinical support space)	6023	6028	16.5 m²	17.2 m²	17.0 metres	NA-ZJ-05-PL-XXX-506	ZJ	4	-	1 x Patient 4 x Others	22	26	26oC not to be exceeded for more than 50 hours per annum against CIBSE DSY weather data.	-	-	6	Supply air rate at 40 litres per second 1. Bedroom balanced or negative with respect to the adjoining corridor. 2. Bedroom positive with respect to the en-suite sanitary room
NSGH-05-GENWB-063	NSGH Inpatient En-suite	6074	6079	4.5 m²	5.1 m²	9.4 metres	NA-ZJ-05-PL-XXX-506	ZJ	4	-	1 x patient 1-2 assistants Intermittent use	22	None	-	-	10	-	-
NSGH-05-GENWB-064	NSGH Inpatient En-suite	6075	6080	4.5 m²	5.2 m²	9.4 metres	NA-ZJ-05-PL-XXX-506	ZJ	4	-	1 x patient 1-2 assistants Intermittent use	22	None	-	-	10	-	-
NSGH-05-GENWB-065	Acute single bedroom (incl family & clinical support space)	6022	6027	16.5 m²	17.1 m²	17.2 metres	NA-ZJ-05-PL-XXX-506	ZJ	4	-	1 x Patient 4 x Others	22	26	26oC not to be exceeded for more than 50 hours per annum against CIBSE DSY weather data.	-	-	6	Supply air rate at 40 litres per second 1. Bedroom balanced or negative with respect to the adjoining corridor. 2. Bedroom positive with respect to the en-suite sanitary room
NSGH-05-GENWB-005	Touch Down Spaces	6088	6093	2.0 m²	1.8 m²	5.8 metres	NA-ZJ-05-PL-XXX-508	ZJ	4	-	1 x Staff	21	None	-	-	-	-	Supply air to balance extract from other areas
NSGH-05-GENWB-018	Touch Down Spaces	6089	6094	2.0 m²	1.8 m²	5.8 metres	NA-ZJ-05-PL-XXX-507	ZJ	4	-	1 x Staff	21	None	-	-	-	-	Supply air to balance extract from other areas
NSGH-05-GENWB-027	Touch Down Spaces	6087	6092	2.0 m²	1.8 m²	5.8 metres	NA-ZJ-05-PL-XXX-507	ZJ	4	-	1 x Staff	21	None	-	-	-	-	Supply air to balance extract from other areas
NSGH-05-GENWB-039	Touch Down Spaces	6086	6091	2.0 m²	1.8 m²	5.8 metres	NA-ZJ-05-PL-XXX-507	ZJ	4	-	1 x Staff	21	None	-	-	-	-	Supply air to balance extract from other areas
NSGH-05-GENWB-048	Touch Down Spaces	6084	6089	0.0 m²	1.8 m²	5.8 metres	NA-ZJ-05-PL-XXX-507	ZJ	4	-	1 x Staff	21	None	-	-	-	-	Supply air to balance extract from other areas
NSGH-05-GENWB-061	Touch Down Spaces	6085	6090	0.0 m²	1.8 m²	5.8 metres	NA-ZJ-05-PL-XXX-506	ZJ	4	-	1 x Staff	21	None	-	-	-	-	Supply air to balance extract from other areas
NSGH-05-GENWB-071	Interview/sitting room	6078	6083	9.0 m²	9.0 m²	12.2 metres	NA-ZJ-05-PL-XXX-506	ZJ	4	-	Up to 4 persons	21	26	26oC not to be exceeded for more than 50 hours per annum against CIBSE DSY weather data.	-	-	-	Air volume to suit occupancy at 10 litres per second per person
NSGH-05-GENWB-072	Resuscitation trolley parking bay: 1 trolley	6079	6084	2.0 m²	2.0 m²	6.5 metres	NA-ZJ-05-PL-XXX-506	ZJ	4	-	1 x Staff Intermittent use	16	None	-	-	-	-	-
NSGH-05-GENWB-073	Nurses Station & Reception	6083	6088	16.0 m²	17.8 m²	22.6 metres	NA-ZJ-05-PL-XXX-508	ZJ	4	-	2 x Staff	21	26	26oC not to be exceeded for more than 50 hours per annum against CIBSE DSY weather data.	-	-	-	Air volume to suit occupancy at 10 litres per second per person
NSGH-05-GENWB-077	Pantry/Beverage making area	6080	6085	12.0 m²	12.0 m²	14.6 metres	NA-ZJ-05-PL-XXX-508	ZJ	4	-	Intermittent use	18	None	-	-	6	5	Minimum air changes per hour (AC/hr): 6
NSGH-05-GENWB-078	Ward Food trolley parking bay	6081	6086	1.5 m²	1.3 m²	5.0 metres	NA-ZJ-05-PL-XXX-508	ZJ	4	-	Intermittent use	16	None	-	-	-	-	-
NSGH-05-GENWB-084	Wheelchair bay	6082	6087	4.0 m²	4.7 m²	10.4 metres	NA-ZJ-05-PL-XXX-507	ZJ	4	-	-	16	None	-	-	-	-	-
NSGH-05-GENWB-075	Equipment Bay L	6090	6095	1.5 m²	1.9 m²	6.2 metres	NA-ZJ-05-PL-XXX-506	ZJ	4	-	-	16	None	-	-	-	-	-
NSGH-05-GENWB-076	Large Eqpt Store	6091	6096	7.5 m²	7.3 m²	12.4 metres	NA-ZJ-05-PL-XXX-508	ZJ	4	-	1 x Staff Intermittent use	16	None	-	-	-	1.5	Mechanical ventilation (supply): Mechanical ventilation required if internal location.
NSGH-05-GENWB-081	Clean Utility Room & Clinical Store/Controlled drug Cupboard & Clinical supplies trolley	6092	6097	15.0 m²	17.1 m²	17.3 metres	NA-ZJ-05-PL-XXX-507	ZJ	4	-	2 x Staff	20	25	-	-	-	6	-
NSGH-05-GENWB-054	Electrical Riser RE41	6097	6102	1.0 m²	2.1 m²	7.1 metres	NA-ZJ-05-PL-XXX-506	ZJ	4	-	N/A	None	None	26oC not to be exceeded for more than 50 hours per annum against CIBSE DSY weather data.	-	-	-	Air volume to suit occupancy at 10 litres per second per person or cooling requirement; whichever the greater
NSGH-05-GENWB-055	Elect/IT cupboars	6104	6109	0.0 m²	5.2 m²	9.4 metres	NA-ZJ-05-PL-XXX-506	ZJ	4			None	None					
NSGH-05-GENWB-066	Cleaners room	6095	6100	7.0 m²	7.2 m²	11.2 metres	NA-ZJ-05-PL-XXX-506	ZJ	4	-	2 x Staff Intermittent use	16	None	-	-	6	-	-
NSGH-05-GENWB-068	Mechanical Riser T13	6102	6107	0.0 m²	29.5 m²	27.9 metres	NA-ZJ-05-PL-XXX-506	ZJ	4			None	None					
NSGH-05-GENWB-074	Corridor	6099	6104	0.0 m²	61.3 m²	58.1 metres	NA-ZJ-05-PL-XXX-508	ZJ	4			18	None					
NSGH-05-GENWB-074_1	Lobby	7941	7946	0.0 m²	5.9 m²	9.7 metres	NA-ZJ-05-PL-XXX-508	ZJ	4			18	None					
NSGH-05-GENWB-079	Dirty utility/Sluice/Test Room - small	6093	6098	6.5 m²	8.1 m²	12.5 metres	NA-ZJ-05-PL-XXX-507	ZJ	4	-	2 x Staff Intermittent use	18	None	-	-	10	-	-
NSGH-05-GENWB-080	Dirty utility/Disposal hold	6096	6101	8.0 m²	7.7 m²	12.0 metres	NA-ZJ-05-PL-XXX-507	ZJ	4	-	1 x Staff Intermittent use	18	None	-	-	10	-	-
NSGH-05-GENWB-082	Mechanical Riser T14	6101	6106	0.0 m²	14.1 m²	17.3 metres	NA-ZJ-05-PL-XXX-507	ZJ	4			None	None					

NSGH-05-GENWB-083	Staff Disabled WC	6094	6099	2.0 m²	5.5 m²	9.9 metres	NA-ZJ-05-PL-XXX-507	ZJ	4	-	1 x Person Intermittent use	20	None	-	-	10	-	-
NSGH-05-GENWB-085	Electrical Riser RE42	6098	6103	0.0 m²	2.4 m²	6.8 metres	NA-ZJ-05-PL-XXX-507	ZJ	4	-	N/A	None	None	-	-	-	-	-
NSGH-05-GENWB-086	Electrical Cupboard	6105	6110	0.0 m²	1.7 m²	6.3 metres	NA-ZJ-05-PL-XXX-507	ZJ	4			None	None					
NSGH-05-GENWB-087	Corridor	6100	6105	0.0 m²	78.7 m²	69.4 metres	NA-ZJ-05-PL-XXX-507	ZJ	4			18	None					
NSGH-05-GENWB-087_1	Corridor	8237	8243	0.0 m²	51.5 m²	49.5 metres	NA-ZJ-05-PL-XXX-507	ZJ	4			18	None					
NSGH-05-GENWB-088	Corridor	6103	6108	0.0 m²	72.8 m²	66.1 metres	NA-ZJ-05-PL-XXX-506	ZJ	4			18	None					
NSGH-05-GENWB-089	Corridor	6106	6111	0.0 m²	42.6 m²	45.2 metres	NA-ZJ-05-PL-XXX-508	ZJ	4			18	None					
NSGH-05-GENWB-090	Corridor	6107	6112	0.0 m²	34.6 m²	35.4 metres	NA-ZJ-05-PL-XXX-506	ZJ	4			18	None					
NSGH-05-GENWB-067	Printer/IT/Admin Store Room	6110	6115	6.0 m²	5.9 m²	9.9 metres	NA-ZJ-05-PL-XXX-506	ZJ	4	-	-	16	None	-	-	1.5	-	-
NSGH-05-GENWB-069	Charge Nurse/Sister s Office (2P)	6109	6114	9.0 m²	8.8 m²	12.0 metres	NA-ZJ-05-PL-XXX-506	ZJ	4	-	1 x Staff 3 x Others	21	26	26oC not to be exceeded for more than 50 hours per annum against CIBSE DSY weather data.	-	-	-	Air volume to suit occupancy at 10 litres per second per person
NSGH-05-GENWB-070	Office (1P) + meeting area	6108	6113	12.0 m²	12.0 m²	14.8 metres	NA-ZJ-05-PL-XXX-506	ZJ	4	-	Up to 7 persons	21	26	26oC not to be exceeded for more than 50 hours per annum against CIBSE DSY weather data.	-	-	-	Air volume to suit occupancy at 10 litres per second per person
NSGH-05-GENWB-032	Socialisation Space	6111	6116	24.0 m²	25.1 m²	21.6 metres	NA-ZJ-05-PL-XXX-507	ZJ	4	-	20 xpatients	22	26	26oC not to be exceeded for more than 50 hours per annum against CIBSE DSY weather data.	-	-	-	Air volume to suit occupancy at 10 litres per second per person
NSGH-05-GENWC-001	Acute single bedroom (incl family & clinical support space)	6115	6120	16.5 m²	19.8 m²	18.3 metres	NA-ZH-05-PL-XXX-509	ZH	4	-	1 x Patient 4 x Others	22	26	26oC not to be exceeded for more than 50 hours per annum against CIBSE DSY weather data.	-	-	6	Supply air rate at 40 litres per second 1. Bedroom balanced or negative with respect to the adjoining corridor. 2. Bedroom positive with respect to the en-suite sanitary room
NSGH-05-GENWC-002	NSGH Inpatient En-suite	6152	6157	4.5 m²	5.2 m²	9.4 metres	NA-ZH-05-PL-XXX-509	ZH	4	-	1 x patient 1-2 assistants Intermittent use	22	None	-	-	10	-	-
NSGH-05-GENWC-003	NSGH Inpatient En-suite	6155	6160	4.5 m²	5.2 m²	9.4 metres	NA-ZH-05-PL-XXX-509	ZH	4	-	1 x patient 1-2 assistants Intermittent use	22	None	-	-	10	-	-
NSGH-05-GENWC-004	Acute single bedroom (incl family & clinical support space)	6114	6119	16.5 m²	16.6 m²	16.8 metres	NA-ZH-05-PL-XXX-509	ZH	4	-	1 x Patient 4 x Others	22	26	26oC not to be exceeded for more than 50 hours per annum against CIBSE DSY weather data.	-	-	6	Supply air rate at 40 litres per second 1. Bedroom balanced or negative with respect to the adjoining corridor. 2. Bedroom positive with respect to the en-suite sanitary room
NSGH-05-GENWC-006	Acute single bedroom (incl family & clinical support space)	6113	6118	16.5 m²	16.6 m²	16.8 metres	NA-ZH-05-PL-XXX-509	ZH	4	-	1 x Patient 4 x Others	22	26	26oC not to be exceeded for more than 50 hours per annum against CIBSE DSY weather data.	-	-	6	Supply air rate at 40 litres per second 1. Bedroom balanced or negative with respect to the adjoining corridor. 2. Bedroom positive with respect to the en-suite sanitary room
NSGH-05-GENWC-007	NSGH Inpatient En-suite	6158	6163	4.5 m²	5.1 m²	9.4 metres	NA-ZH-05-PL-XXX-509	ZH	4	-	1 x patient 1-2 assistants Intermittent use	22	None	-	-	10	-	-
NSGH-05-GENWC-008	NSGH Inpatient En-suite	6156	6161	4.5 m²	5.2 m²	9.4 metres	NA-ZH-05-PL-XXX-509	ZH	4	-	1 x patient 1-2 assistants Intermittent use	22	None	-	-	10	-	-
NSGH-05-GENWC-009	Acute single bedroom (incl family & clinical support space)	6112	6117	16.5 m²	17.3 m²	16.8 metres	NA-ZH-05-PL-XXX-509	ZH	4	-	1 x Patient 4 x Others	22	26	26oC not to be exceeded for more than 50 hours per annum against CIBSE DSY weather data.	-	-	6	Supply air rate at 40 litres per second 1. Bedroom balanced or negative with respect to the adjoining corridor. 2. Bedroom positive with respect to the en-suite sanitary room
NSGH-05-GENWC-010	Acute single bedroom (incl family & clinical support space)	6116	6121	16.5 m²	18.3 m²	18.9 metres	NA-ZH-05-PL-XXX-509	ZH	4	-	1 x Patient 4 x Others	22	26	26oC not to be exceeded for more than 50 hours per annum against CIBSE DSY weather data.	-	-	6	Supply air rate at 40 litres per second 1. Bedroom balanced or negative with respect to the adjoining corridor. 2. Bedroom positive with respect to the en-suite sanitary room
NSGH-05-GENWC-011	NSGH Inpatient En-suite	6157	6162	4.5 m²	5.3 m²	9.5 metres	NA-ZH-05-PL-XXX-509	ZH	4	-	1 x patient 1-2 assistants Intermittent use	22	None	-	-	10	-	-
NSGH-05-GENWC-012	NSGH Inpatient En-suite	6160	6165	4.5 m²	5.3 m²	9.5 metres	NA-ZH-05-PL-XXX-509	ZH	4	-	1 x patient 1-2 assistants Intermittent use	22	None	-	-	10	-	-
NSGH-05-GENWC-013	Acute single bedroom (incl family & clinical support space)	6128	6133	16.5 m²	17.8 m²	17.1 metres	NA-ZH-05-PL-XXX-509	ZH	4	-	1 x Patient 4 x Others	22	26	26oC not to be exceeded for more than 50 hours per annum against CIBSE DSY weather data.	-	-	6	Supply air rate at 40 litres per second 1. Bedroom balanced or negative with respect to the adjoining corridor. 2. Bedroom positive with respect to the en-suite sanitary room
NSGH-05-GENWC-014	Acute single bedroom (incl family & clinical support space)	6139	6144	16.5 m²	17.4 m²	18.4 metres	NA-ZH-05-PL-XXX-509	ZH	4	-	1 x Patient 4 x Others	22	26	26oC not to be exceeded for more than 50 hours per annum against CIBSE DSY weather data.	-	-	6	Supply air rate at 40 litres per second 1. Bedroom balanced or negative with respect to the adjoining corridor. 2. Bedroom positive with respect to the en-suite sanitary room
NSGH-05-GENWC-015	NSGH Inpatient En-suite	6159	6164	4.5 m²	5.3 m²	9.5 metres	NA-ZH-05-PL-XXX-509	ZH	4	-	1 x patient 1-2 assistants Intermittent use	22	None	-	-	10	-	-
NSGH-05-GENWC-016	NSGH Inpatient En-suite	6162	6167	4.5 m²	5.3 m²	9.5 metres	NA-ZH-05-PL-XXX-510	ZH	4	-	1 x patient 1-2 assistants Intermittent use	22	None	-	-	10	-	-
NSGH-05-GENWC-017	Acute single bedroom (incl family & clinical support space)	6138	6143	16.5 m²	17.2 m²	17.1 metres	NA-ZH-05-PL-XXX-510	ZH	4	-	1 x Patient 4 x Others	22	26	26oC not to be exceeded for more than 50 hours per annum against CIBSE DSY weather data.	-	-	6	Supply air rate at 40 litres per second 1. Bedroom balanced or negative with respect to the adjoining corridor. 2. Bedroom positive with respect to the en-suite sanitary room
NSGH-05-GENWC-019	Acute single bedroom (incl family & clinical support space)	6137	6142	16.5 m²	16.9 m²	17.1 metres	NA-ZH-05-PL-XXX-510	ZH	4	-	1 x Patient 4 x Others	22	26	26oC not to be exceeded for more than 50 hours per annum against CIBSE DSY weather data.	-	-	6	Supply air rate at 40 litres per second 1. Bedroom balanced or negative with respect to the adjoining corridor. 2. Bedroom positive with respect to the en-suite sanitary room
NSGH-05-GENWC-020	NSGH Inpatient En-suite	6164	6169	4.5 m²	5.3 m²	9.5 metres	NA-ZH-05-PL-XXX-510	ZH	4	-	1 x patient 1-2 assistants Intermittent use	22	None	-	-	10	-	-
NSGH-05-GENWC-021	NSGH Inpatient En-suite	6161	6166	4.5 m²	5.3 m²	9.5 metres	NA-ZH-05-PL-XXX-510	ZH	4	-	1 x patient 1-2 assistants Intermittent use	22	None	-	-	10	-	-
NSGH-05-GENWC-022	Acute single bedroom (incl family & clinical support space)	6133	6138	16.5 m²	17.6 m²	17.1 metres	NA-ZH-05-PL-XXX-510	ZH	4	-	1 x Patient 4 x Others	22	26	26oC not to be exceeded for more than 50 hours per annum against CIBSE DSY weather data.	-	-	6	Supply air rate at 40 litres per second 1. Bedroom balanced or negative with respect to the adjoining corridor. 2. Bedroom positive with respect to the en-suite sanitary room
NSGH-05-GENWC-023	Acute single bedroom (incl family & clinical support space)	6134	6139	16.5 m²	17.7 m²	17.1 metres	NA-ZH-05-PL-XXX-510	ZH	4	-	1 x Patient 4 x Others	22	26	26oC not to be exceeded for more than 50 hours per annum against CIBSE DSY weather data.	-	-	6	Supply air rate at 40 litres per second 1. Bedroom balanced or negative with respect to the adjoining corridor. 2. Bedroom positive with respect to the en-suite sanitary room
NSGH-05-GENWC-024	NSGH Inpatient En-suite	6163	6168	4.5 m²	5.3 m²	9.5 metres	NA-ZH-05-PL-XXX-510	ZH	4	-	1 x patient 1-2 assistants Intermittent use	22	None	-	-	10	-	-
NSGH-05-GENWC-025	NSGH Inpatient En-suite	6165	6170	4.5 m²	5.3 m²	9.5 metres	NA-ZH-05-PL-XXX-510	ZH	4	-	1 x patient 1-2 assistants Intermittent use	22	None	-	-	10	-	-
NSGH-05-GENWC-026	Acute single bedroom (incl family & clinical support space)	6135	6140	16.5 m²	17.0 m²	17.5 metres	NA-ZH-05-PL-XXX-510	ZH	4	-	1 x Patient 4 x Others	22	26	26oC not to be exceeded for more than 50 hours per annum against CIBSE DSY weather data.	-	-	6	Supply air rate at 40 litres per second 1. Bedroom balanced or negative with respect to the adjoining corridor. 2. Bedroom positive with respect to the en-suite sanitary room
NSGH-05-GENWC-028	Acute single bedroom (incl family & clinical support space)	6136	6141	16.5 m²	17.1 m²	17.5 metres	NA-ZH-05-PL-XXX-510	ZH	4	-	1 x Patient 4 x Others	22	26	26oC not to be exceeded for more than 50 hours per annum against CIBSE DSY weather data.	-	-	6	Supply air rate at 40 litres per second 1. Bedroom balanced or negative with respect to the adjoining corridor. 2. Bedroom positive with respect to the en-suite sanitary room
NSGH-05-GENWC-029	NSGH Inpatient En-suite	6166	6171	4.5 m²	5.3 m²	9.5 metres	NA-ZH-05-PL-XXX-510	ZH	4	-	1 x patient 1-2 assistants Intermittent use	22	None	-	-	10	-	-
NSGH-05-GENWC-030	NSGH Inpatient En-suite	6151	6156	4.5 m²	5.3 m²	9.5 metres	NA-ZH-05-PL-XXX-510	ZH	4	-	1 x patient 1-2 assistants Intermittent use	22	None	-	-	10	-	-
NSGH-05-GENWC-031	Acute single bedroom (incl family & clinical support space)	6132	6137	16.5 m²	17.5 m²	17.0 metres	NA-ZH-05-PL-XXX-510	ZH	4	-	1 x Patient 4 x Others	22	26	26oC not to be exceeded for more than 50 hours per annum against CIBSE DSY weather data.	-	-	6	Supply air rate at 40 litres per second 1. Bedroom balanced or negative with respect to the adjoining corridor. 2. Bedroom positive with respect to the en-suite sanitary room
NSGH-05-GENWC-033	Acute single bedroom (incl family & clinical support space)	6130	6135	16.5 m²	19.0 m²	18.3 metres	NA-ZH-05-PL-XXX-510	ZH	4	-	1 x Patient 4 x Others	22	26	26oC not to be exceeded for more than 50 hours per annum against CIBSE DSY weather data.	-	-	6	Supply air rate at 40 litres per second 1. Bedroom balanced or negative with respect to the adjoining corridor. 2. Bedroom positive with respect to the en-suite sanitary room
NSGH-05-GENWC-034	NSGH Inpatient En-suite	6141	6146	4.5 m²	6.4 m²	10.0 metres	NA-ZH-05-PL-XXX-510	ZH	4	-	1 x patient 1-2 assistants Intermittent use	22	None	-	-	10	-	-
NSGH-05-GENWC-035	Acute single bedroom (incl family & clinical support space)	6117	6122	16.5 m²	17.1 m²	16.8 metres	NA-ZH-05-PL-XXX-510	ZH	4	-	1 x Patient 4 x Others	22	26	26oC not to be exceeded for more than 50 hours per annum against CIBSE DSY weather data.	-	-	6	Supply air rate at 40 litres per second 1. Bedroom balanced or negative with respect to the adjoining corridor. 2. Bedroom positive with respect to the en-suite sanitary room
NSGH-05-GENWC-036	NSGH Inpatient En-suite	6143	6148	4.5 m²	5.3 m²	9.5 metres	NA-ZH-05-PL-XXX-510	ZH	4	-	1 x patient 1-2 assistants Intermittent use	22	None	-	-	10	-	-
NSGH-05-GENWC-037	NSGH Inpatient En-suite	6140	6145	4.5 m²	5.3 m²	9.5 metres	NA-ZH-05-PL-XXX-510	ZH	4	-	1 x patient 1-2 assistants Intermittent use	22	None	-	-	10	-	-
NSGH-05-GENWC-038	Acute single bedroom (incl family & clinical support space)	6129	6134	16.5 m²	17.0 m²	17.5 metres	NA-ZH-05-PL-XXX-510	ZH	4	-	1 x Patient 4 x Others	22	26	26oC not to be exceeded for more than 50 hours per annum against CIBSE DSY weather data.	-	-	6	Supply air rate at 40 litres per second 1. Bedroom balanced or negative with respect to the adjoining corridor. 2. Bedroom positive with respect to the en-suite sanitary room
NSGH-05-GENWC-040	Acute single bedroom (incl family & clinical support space)	6118	6123	16.5 m²	17.2 m²	17.1 metres	NA-ZH-05-PL-XXX-510	ZH	4	-	1 x Patient 4 x Others	22	26	26oC not to be exceeded for more than 50 hours per annum against CIBSE DSY weather data.	-	-	6	Supply air rate at 40 litres per second 1. Bedroom balanced or negative with respect to the adjoining corridor. 2. Bedroom positive with respect to the en-suite sanitary room
NSGH-05-GENWC-041	NSGH Inpatient En-suite	6142	6147	4.5 m²	5.3 m²	9.5 metres	NA-ZH-05-PL-XXX-510	ZH	4	-	1 x patient 1-2 assistants Intermittent use	22	None	-	-	10	-	-
NSGH-05-GENWC-042	NSGH Inpatient En-suite	6145	6150	4.5 m²	5.3 m²	9.5 metres	NA-ZH-05-PL-XXX-510	ZH	4	-	1 x patient 1-2 assistants Intermittent use	22	None	-	-	10	-	-
NSGH-05-GENWC-043	Acute single bedroom (incl family & clinical support space)	6127	6132	16.5 m²	17.7 m²	17.5 metres	NA-ZH-05-PL-XXX-510	ZH	4	-	1 x Patient 4 x Others	22	26	26oC not to be exceeded for more than 50 hours per annum against CIBSE DSY weather data.	-	-	6	Supply air rate at 40 litres per second 1. Bedroom balanced or negative with respect to the adjoining corridor. 2. Bedroom positive with respect to the en-suite sanitary room
NSGH-05-GENWC-044	Acute single bedroom (incl family & clinical support space)	6126	6131	16.5 m²	17.4 m²	18.0 metres	NA-ZH-05-PL-XXX-510	ZH	4	-	1 x Patient 4 x Others	22	26	26oC not to be exceeded for more than 50 hours per annum against CIBSE DSY weather data.	-	-	6	Supply air rate at 40 litres per second 1. Bedroom balanced or negative with respect to the adjoining corridor. 2. Bedroom positive with respect to the en-suite sanitary room
NSGH-05-GENWC-045	NSGH Inpatient En-suite	6144	6149	4.5 m²	5.3 m²	9.5 metres	NA-ZH-05-PL-XXX-510	ZH	4	-	1 x patient 1-2 assistants Intermittent use	22	None	-	-	10	-	-
NSGH-05-GENWC-046	NSGH Inpatient En-suite	6147	6152	4.5 m²	5.3 m²	9.5 metres	NA-ZH-05-PL-XXX-510	ZH	4	-	1 x patient 1-2 assistants Intermittent use	22	None	-	-	10	-	-

NSGH-05-GENWC-047	Acute single bedroom (incl family & clinical support space)	6124	6129	16.5 m²	17.1 m²	17.5 metres	NA-ZH-05-PL-XXX-510	ZH	4	-	1 x Patient 4 x Others	22	26	26oC not to be exceeded for more than 50 hours per annum against CIBSE DSY weather data.	-	-	6	Supply air rate at 40 litres per second 1. Bedroom balanced or negative with respect to the adjoining corridor. 2. Bedroom positive with respect to the en-suite sanitary room
NSGH-05-GENWC-049	Acute single bedroom (incl family & clinical support space)	6123	6128	16.5 m²	16.9 m²	18.4 metres	NA-ZH-05-PL-XXX-510	ZH	4	-	1 x Patient 4 x Others	22	26	26oC not to be exceeded for more than 50 hours per annum against CIBSE DSY weather data.	-	-	6	Supply air rate at 40 litres per second 1. Bedroom balanced or negative with respect to the adjoining corridor. 2. Bedroom positive with respect to the en-suite sanitary room
NSGH-05-GENWC-050	NSGH Inpatient En-suite	6148	6153	4.5 m²	5.3 m²	9.5 metres	NA-ZH-05-PL-XXX-510	ZH	4	-	1 x patient 1-2 assistants Intermittent use	22	None	-	-	10	-	-
NSGH-05-GENWC-051	NSGH Inpatient En-suite	6146	6151	4.5 m²	5.3 m²	9.5 metres	NA-ZH-05-PL-XXX-511	ZH	4	-	1 x patient 1-2 assistants Intermittent use	22	None	-	-	10	-	-
NSGH-05-GENWC-052	Acute single bedroom (incl family & clinical support space)	6125	6130	16.5 m²	17.5 m²	17.3 metres	NA-ZH-05-PL-XXX-511	ZH	4	-	1 x Patient 4 x Others	22	26	26oC not to be exceeded for more than 50 hours per annum against CIBSE DSY weather data.	-	-	6	Supply air rate at 40 litres per second 1. Bedroom balanced or negative with respect to the adjoining corridor. 2. Bedroom positive with respect to the en-suite sanitary room
NSGH-05-GENWC-053	Acute single bedroom (incl family & clinical support space)	6131	6136	16.5 m²	19.5 m²	18.3 metres	NA-ZH-05-PL-XXX-511	ZH	4	-	1 x Patient 4 x Others	22	26	26oC not to be exceeded for more than 50 hours per annum against CIBSE DSY weather data.	-	-	6	Supply air rate at 40 litres per second 1. Bedroom balanced or negative with respect to the adjoining corridor. 2. Bedroom positive with respect to the en-suite sanitary room
NSGH-05-GENWC-056	NSGH Inpatient En-suite	6154	6159	4.5 m²	5.3 m²	9.6 metres	NA-ZH-05-PL-XXX-511	ZH	4	-	1 x patient 1-2 assistants Intermittent use	22	None	-	-	10	-	-
NSGH-05-GENWC-057	Acute single bedroom (incl family & clinical support space)	6122	6127	16.5 m²	16.7 m²	16.8 metres	NA-ZH-05-PL-XXX-511	ZH	4	-	1 x Patient 4 x Others	22	26	26oC not to be exceeded for more than 50 hours per annum against CIBSE DSY weather data.	-	-	6	Supply air rate at 40 litres per second 1. Bedroom balanced or negative with respect to the adjoining corridor. 2. Bedroom positive with respect to the en-suite sanitary room
NSGH-05-GENWC-058	NSGH Inpatient En-suite	6167	6172	4.5 m²	5.2 m²	9.4 metres	NA-ZH-05-PL-XXX-511	ZH	4	-	1 x patient 1-2 assistants Intermittent use	22	None	-	-	10	-	-
NSGH-05-GENWC-059	NSGH Inpatient En-suite	6150	6155	4.5 m²	5.1 m²	9.4 metres	NA-ZH-05-PL-XXX-511	ZH	4	-	1 x patient 1-2 assistants Intermittent use	22	None	-	-	10	-	-
NSGH-05-GENWC-060	Acute single bedroom (incl family & clinical support space)	6121	6126	16.5 m²	17.1 m²	17.0 metres	NA-ZH-05-PL-XXX-511	ZH	4	-	1 x Patient 4 x Others	22	26	26oC not to be exceeded for more than 50 hours per annum against CIBSE DSY weather data.	-	-	6	Supply air rate at 40 litres per second 1. Bedroom balanced or negative with respect to the adjoining corridor. 2. Bedroom positive with respect to the en-suite sanitary room
NSGH-05-GENWC-062	Acute single bedroom (incl family & clinical support space)	6120	6125	16.5 m²	17.1 m²	17.4 metres	NA-ZH-05-PL-XXX-511	ZH	4	-	1 x Patient 4 x Others	22	26	26oC not to be exceeded for more than 50 hours per annum against CIBSE DSY weather data.	-	-	6	Supply air rate at 40 litres per second 1. Bedroom balanced or negative with respect to the adjoining corridor. 2. Bedroom positive with respect to the en-suite sanitary room
NSGH-05-GENWC-063	NSGH Inpatient En-suite	6153	6158	4.5 m²	5.1 m²	9.4 metres	NA-ZH-05-PL-XXX-511	ZH	4	-	1 x patient 1-2 assistants Intermittent use	22	None	-	-	10	-	-
NSGH-05-GENWC-064	NSGH Inpatient En-suite	6149	6154	4.5 m²	5.2 m²	9.4 metres	NA-ZH-05-PL-XXX-511	ZH	4	-	1 x patient 1-2 assistants Intermittent use	22	None	-	-	10	-	-
NSGH-05-GENWC-065	Acute single bedroom (incl family & clinical support space)	6119	6124	16.5 m²	16.9 m²	16.8 metres	NA-ZH-05-PL-XXX-511	ZH	4	-	1 x Patient 4 x Others	22	26	26oC not to be exceeded for more than 50 hours per annum against CIBSE DSY weather data.	-	-	6	Supply air rate at 40 litres per second 1. Bedroom balanced or negative with respect to the adjoining corridor. 2. Bedroom positive with respect to the en-suite sanitary room
NSGH-05-GENWC-005	Touch Down Spaces	6174	6179	2.0 m²	1.8 m²	5.8 metres	NA-ZH-05-PL-XXX-509	ZH	4	-	1 x Staff	21	None	-	-	-	-	Supply air to balance extract from other areas
NSGH-05-GENWC-018	Touch Down Spaces	6176	6181	2.0 m²	1.8 m²	5.8 metres	NA-ZH-05-PL-XXX-510	ZH	4	-	1 x Staff	21	None	-	-	-	-	Supply air to balance extract from other areas
NSGH-05-GENWC-027	Touch Down Spaces	6177	6182	2.0 m²	1.8 m²	5.8 metres	NA-ZH-05-PL-XXX-510	ZH	4	-	1 x Staff	21	None	-	-	-	-	Supply air to balance extract from other areas
NSGH-05-GENWC-039	Touch Down Spaces	6178	6183	2.0 m²	1.8 m²	5.8 metres	NA-ZH-05-PL-XXX-510	ZH	4	-	1 x Staff	21	None	-	-	-	-	Supply air to balance extract from other areas
NSGH-05-GENWC-048	Touch Down Spaces	6179	6184	0.0 m²	1.8 m²	5.8 metres	NA-ZH-05-PL-XXX-510	ZH	4	-	1 x Staff	21	None	-	-	-	-	Supply air to balance extract from other areas
NSGH-05-GENWC-061	Touch Down Spaces	6175	6180	0.0 m²	1.8 m²	5.8 metres	NA-ZH-05-PL-XXX-511	ZH	4	-	1 x Staff	21	None	-	-	-	-	Supply air to balance extract from other areas
NSGH-05-GENWC-071	Interview/sitting room	6168	6173	9.0 m²	9.0 m²	12.2 metres	NA-ZH-05-PL-XXX-511	ZH	4	-	Up to 4 persons	21	26	26oC not to be exceeded for more than 50 hours per annum against CIBSE DSY weather data.	-	-	-	Air volume to suit occupancy at 10 litres per second per person
NSGH-05-GENWC-072	Resuscitation trolley parking bay: 1 trolley	6169	6174	2.0 m²	1.9 m²	6.5 metres	NA-ZH-05-PL-XXX-511	ZH	4	-	1 x Staff Intermittent use	16	None	-	-	-	-	-
NSGH-05-GENWC-073	Nurses Station & Reception	6173	6178	16.0 m²	17.1 m²	22.3 metres	NA-ZH-05-PL-XXX-509	ZH	4	-	2 x Staff	21	26	26oC not to be exceeded for more than 50 hours per annum against CIBSE DSY weather data.	-	-	-	Air volume to suit occupancy at 10 litres per second per person
NSGH-05-GENWC-077	Pantry/Beverage making area	6170	6175	12.0 m²	12.4 m²	14.6 metres	NA-ZH-05-PL-XXX-509	ZH	4	-	Intermittent use	18	None	-	-	6	5	Minimum air changes per hour (AC/hr): 6
NSGH-05-GENWC-078	Ward Food trolley parking bay	6171	6176	1.5 m²	1.1 m²	4.8 metres	NA-ZH-05-PL-XXX-509	ZH	4	-	Intermittent use	16	None	-	-	-	-	-
NSGH-05-GENWC-084	Wheelchair bay	6172	6177	4.0 m²	4.7 m²	10.4 metres	NA-ZH-05-PL-XXX-510	ZH	4	-	-	16	None	-	-	-	-	-
NSGH-05-GENWC-075	Equipment Bay L	6181	6186	1.5 m²	2.1 m²	7.6 metres	NA-ZH-05-PL-XXX-511	ZH	4	-	-	16	None	-	-	-	-	-
NSGH-05-GENWC-076	Large Eqpt Store	6180	6185	7.5 m²	6.8 m²	11.2 metres	NA-ZH-05-PL-XXX-509	ZH	4	-	1 x Staff Intermittent use	16	None	-	-	-	1.5	Mechanical ventilation (supply): Mechanical ventilation required if internal location.
NSGH-05-GENWC-081	Clean Utility Room & Clinical Store/Controlled drug Cupboard & Clinical supplies trolley	6182	6187	15.0 m²	16.8 m²	18.2 metres	NA-ZH-05-PL-XXX-510	ZH	4	-	2 x Staff	20	25	-	-	-	6	-
NSGH-05-GENWC-054	Electrical Riser RE44	6194	6199	0.0 m²	2.2 m²	7.9 metres	NA-ZH-05-PL-XXX-511	ZH	4			None	None					
NSGH-05-GENWC-055	Switchgear cupboard	6186	6191	1.0 m²	5.0 m²	9.2 metres	NA-ZH-05-PL-XXX-511	ZH	4	-	N/A	None	None	26oC not to be exceeded for more than 50 hours per annum against CIBSE DSY weather data.	-	-	-	Air volume to suit occupancy at 10 litres per second per person or cooling requirement; whichever the greater
NSGH-05-GENWC-066	Cleaners room	6183	6188	7.0 m²	7.2 m²	10.9 metres	NA-ZH-05-PL-XXX-511	ZH	4	-	2 x Staff Intermittent use	16	None	-	-	6	-	-
NSGH-05-GENWC-068	Mechanical Riser T5	6190	6195	0.0 m²	29.4 m²	27.3 metres	NA-ZH-05-PL-XXX-511	ZH	4			None	None					
NSGH-05-GENWC-074	Corridor	6193	6198	0.0 m²	62.4 m²	58.4 metres	NA-ZH-05-PL-XXX-509	ZH	4			18	None					
NSGH-05-GENWC-074_1	Lobby	7942	7947	0.0 m²	5.9 m²	9.7 metres	NA-ZH-05-PL-XXX-509	ZH	4			18	None					
NSGH-05-GENWC-079	Dirty utility/Sluice/Test Room - small	6185	6190	6.5 m²	8.3 m²	12.0 metres	NA-ZH-05-PL-XXX-510	ZH	4	-	2 x Staff Intermittent use	18	None	-	-	10	-	-
NSGH-05-GENWC-080	Dirty utility/Disposal hold	6184	6189	8.0 m²	7.5 m²	11.4 metres	NA-ZH-05-PL-XXX-510	ZH	4	-	1 x Staff Intermittent use	18	None	-	-	10	-	-
NSGH-05-GENWC-082	Mechanical Riser T6	6189	6194	0.0 m²	14.0 m²	17.7 metres	NA-ZH-05-PL-XXX-510	ZH	4			None	None					
NSGH-05-GENWC-083	Staff Disabled WC	6187	6192	2.0 m²	5.5 m²	10.0 metres	NA-ZH-05-PL-XXX-510	ZH	4	-	1 x Person Intermittent use	20	None	-	-	10	-	-
NSGH-05-GENWC-085	Electrical cupboard	6195	6200	0.0 m²	2.2 m²	7.4 metres	NA-ZH-05-PL-XXX-510	ZH	4			None	None					
NSGH-05-GENWC-086	Electrical Riser RE43	6188	6193	0.0 m²	1.7 m²	6.3 metres	NA-ZH-05-PL-XXX-510	ZH	4	-	N/A	None	None	-	-	-	-	-
NSGH-05-GENWC-087	Corridor	6192	6197	0.0 m²	79.4 m²	71.0 metres	NA-ZH-05-PL-XXX-510	ZH	4			18	None					
NSGH-05-GENWC-087_1	Corridor	8238	8244	0.0 m²	50.5 m²	48.7 metres	NA-ZH-05-PL-XXX-510	ZH	4			18	None					
NSGH-05-GENWC-088	Corridor	6191	6196	0.0 m²	73.0 m²	66.1 metres	NA-ZH-05-PL-XXX-511	ZH	4			18	None					
NSGH-05-GENWC-089	Corridor	6196	6201	0.0 m²	42.5 m²	44.0 metres	NA-ZH-05-PL-XXX-509	ZH	4			18	None					
NSGH-05-GENWC-090	Corridor	6197	6202	0.0 m²	34.6 m²	35.4 metres	NA-ZH-05-PL-XXX-511	ZH	4			18	None					
NSGH-05-GENWC-067	Printer/IT/Admin Store Room	6200	6205	6.0 m²	5.9 m²	10.0 metres	NA-ZH-05-PL-XXX-511	ZH	4	-	-	16	None	-	-	1.5	-	-
NSGH-05-GENWC-069	Charge Nurse/Sister s Office (2P)	6199	6204	9.0 m²	8.5 m²	12.0 metres	NA-ZH-05-PL-XXX-511	ZH	4	-	1 x Staff 3 x Others	21	26	26oC not to be exceeded for more than 50 hours per annum against CIBSE DSY weather data.	-	-	-	Air volume to suit occupancy at 10 litres per second per person
NSGH-05-GENWC-070	Office (1P) + meeting area	6198	6203	12.0 m²	11.7 m²	14.1 metres	NA-ZH-05-PL-XXX-511	ZH	4	-	Up to 7 persons	21	26	26oC not to be exceeded for more than 50 hours per annum against CIBSE DSY weather data.	-	-	-	Air volume to suit occupancy at 10 litres per second per person
NSGH-05-GENWC-032	Socialisation Space	6201	6206	24.0 m²	25.1 m²	21.6 metres	NA-ZH-05-PL-XXX-510	ZH	4	-	20 xpatients	22	26	26oC not to be exceeded for more than 50 hours per annum against CIBSE DSY weather data.	-	-	-	Air volume to suit occupancy at 10 litres per second per person but with a 75% diversity applied
NSGH-05-GENWD-001	Acute single bedroom (incl family & clinical support space)	8085	8091	16.5 m²	19.8 m²	18.3 metres	NA-ZE-05-PL-XXX-514	ZE	4	-	1 x Patient 4 x Others	22	26	26oC not to be exceeded for more than 50 hours per annum against CIBSE DSY weather data.	-	-	6	Supply air rate at 40 litres per second 1. Bedroom balanced or negative with respect to the adjoining corridor. 2. Bedroom positive with respect to the en-suite sanitary room
NSGH-05-GENWD-002	NSGH Inpatient En-suite	8129	8135	4.5 m²	5.2 m²	9.4 metres	NA-ZE-05-PL-XXX-514	ZE	4	-	1 x patient 1-2 assistants Intermittent use	22	None	-	-	10	-	-
NSGH-05-GENWD-003	NSGH Inpatient En-suite	6236	6241	4.5 m²	5.2 m²	9.4 metres	NA-ZE-05-PL-XXX-514	ZE	4	-	1 x patient 1-2 assistants Intermittent use	22	None	-	-	10	-	-
NSGH-05-GENWD-004	Acute single bedroom (incl family & clinical support space)	6220	6225	16.5 m²	16.7 m²	16.8 metres	NA-ZE-05-PL-XXX-514	ZE	4	-	1 x Patient 4 x Others	22	26	26oC not to be exceeded for more than 50 hours per annum against CIBSE DSY weather data.	-	-	6	Supply air rate at 40 litres per second 1. Bedroom balanced or negative with respect to the adjoining corridor. 2. Bedroom positive with respect to the en-suite sanitary room
NSGH-05-GENWD-006	Acute single bedroom (incl family & clinical support space)	6205	6210	16.5 m²	16.6 m²	16.8 metres	NA-ZE-05-PL-XXX-514	ZE	4	-	1 x Patient 4 x Others	22	26	26oC not to be exceeded for more than 50 hours per annum against CIBSE DSY weather data.	-	-	6	Supply air rate at 40 litres per second 1. Bedroom balanced or negative with respect to the adjoining corridor. 2. Bedroom positive with respect to the en-suite sanitary room
NSGH-05-GENWD-007	NSGH Inpatient En-suite	6237	6242	4.5 m²	5.2 m²	9.4 metres	NA-ZE-05-PL-XXX-514	ZE	4	-	1 x patient 1-2 assistants Intermittent use	22	None	-	-	10	-	-
NSGH-05-GENWD-008	NSGH Inpatient En-suite	6257	6262	4.5 m²	5.2 m²	9.4 metres	NA-ZE-05-PL-XXX-514	ZE	4	-	1 x patient 1-2 assistants Intermittent use	22	None	-	-	10	-	-
NSGH-05-GENWD-009	Acute single bedroom (incl family & clinical support space)	6256	6261	16.5 m²	17.1 m²	17.2 metres	NA-ZE-05-PL-XXX-514	ZE	4	-	1 x Patient 4 x Others	22	26	26oC not to be exceeded for more than 50 hours per annum against CIBSE DSY weather data.	-	-	6	Supply air rate at 40 litres per second 1. Bedroom balanced or negative with respect to the adjoining corridor. 2. Bedroom positive with respect to the en-suite sanitary room
NSGH-05-GENWD-010	Acute single bedroom (incl family & clinical support space)	6248	6253	16.5 m²	18.6 m²	17.7 metres	NA-ZE-05-PL-XXX-514	ZE	4	-	1 x Patient 4 x Others	22	26	26oC not to be exceeded for more than 50 hours per annum against CIBSE DSY weather data.	-	-	6	Supply air rate at 40 litres per second 1. Bedroom balanced or negative with respect to the adjoining corridor. 2. Bedroom positive with respect to the en-suite sanitary room
NSGH-05-GENWD-011	NSGH Inpatient En-suite	6238	6243	4.5 m²	5.3 m²	9.6 metres	NA-ZE-05-PL-XXX-514	ZE	4	-	1 x patient 1-2 assistants Intermittent use	22	None	-	-	10	-	-
NSGH-05-GENWD-012	NSGH Inpatient En-suite	6240	6245	4.5 m²	5.3 m²	9.5 metres	NA-ZE-05-PL-XXX-514	ZE	4	-	1 x patient 1-2 assistants Intermittent use	22	None	-	-	10	-	-
NSGH-05-GENWD-013	Acute single bedroom (incl family & clinical support space)	6255	6260	16.5 m²	17.6 m²	17.1 metres	NA-ZE-05-PL-XXX-514	ZE	4	-	1 x Patient 4 x Others	22	26	26oC not to be exceeded for more than 50 hours per annum against CIBSE DSY weather data.	-	-	6	Supply air rate at 40 litres per second 1. Bedroom balanced or negative with respect to the adjoining corridor. 2. Bedroom positive with respect to the en-suite sanitary room
NSGH-05-GENWD-014	Acute single bedroom (incl family & clinical support space)	6254	6259	16.5 m²	17.6 m²	17.1 metres	NA-ZE-05-PL-XXX-514	ZE	4	-	1 x Patient 4 x Others	22	26	26oC not to be exceeded for more than 50 hours per annum against CIBSE DSY weather data.	-	-	6	Supply air rate at 40 litres per second 1. Bedroom balanced or negative with respect to the adjoining corridor. 2. Bedroom positive with respect to the en-suite sanitary room
NSGH-05-GENWD-015	NSGH Inpatient En-suite	6239	6244	4.5 m²	5.3 m²	9.5 metres	NA-ZE-05-PL-XXX-514	ZE	4	-	1 x patient 1-2 assistants Intermittent use	22	None	-	-	10	-	-
NSGH-05-GENWD-016	NSGH Inpatient En-suite	6242	6247	4.5 m²	5.3 m²	9.6 metres	NA-ZE-05-PL-XXX-513	ZE	4	-	1 x patient 1-2 assistants Intermittent use	22	None	-	-	10	-	-

NSGH-05-GENWD-017	Acute single bedroom (incl family & clinical support space)	6253	6258	16.5 m²	17.0 m²	17.1 metres	NA-ZE-05-PL-XXX-513	ZE	4	-	1 x Patient 4 x Others	22	26	26oC not to be exceeded for more than 50 hours per annum against CIBSE DSY weather data.	-	-	6	Supply air rate at 40 litres per second 1. Bedroom balanced or negative with respect to the adjoining corridor. 2. Bedroom positive with respect to the en-suite sanitary room
NSGH-05-GENWD-019	Acute single bedroom (incl family & clinical support space)	6252	6257	16.5 m²	16.8 m²	17.5 metres	NA-ZE-05-PL-XXX-513	ZE	4	-	1 x Patient 4 x Others	22	26	26oC not to be exceeded for more than 50 hours per annum against CIBSE DSY weather data.	-	-	6	Supply air rate at 40 litres per second 1. Bedroom balanced or negative with respect to the adjoining corridor. 2. Bedroom positive with respect to the en-suite sanitary room
NSGH-05-GENWD-020	NSGH Inpatient En-suite	6241	6246	4.5 m²	5.3 m²	9.6 metres	NA-ZE-05-PL-XXX-513	ZE	4	-	1 x patient 1-2 assistants Intermittent use	22	None	-	-	10	-	-
NSGH-05-GENWD-021	NSGH Inpatient En-suite	6244	6249	4.5 m²	5.3 m²	9.5 metres	NA-ZE-05-PL-XXX-513	ZE	4	-	1 x patient 1-2 assistants Intermittent use	22	None	-	-	10	-	-
NSGH-05-GENWD-022	Acute single bedroom (incl family & clinical support space)	6251	6256	16.5 m²	17.6 m²	17.1 metres	NA-ZE-05-PL-XXX-513	ZE	4	-	1 x Patient 4 x Others	22	26	26oC not to be exceeded for more than 50 hours per annum against CIBSE DSY weather data.	-	-	6	Supply air rate at 40 litres per second 1. Bedroom balanced or negative with respect to the adjoining corridor. 2. Bedroom positive with respect to the en-suite sanitary room
NSGH-05-GENWD-023	Acute single bedroom (incl family & clinical support space)	6249	6254	16.5 m²	17.7 m²	17.1 metres	NA-ZE-05-PL-XXX-513	ZE	4	-	1 x Patient 4 x Others	22	26	26oC not to be exceeded for more than 50 hours per annum against CIBSE DSY weather data.	-	-	6	Supply air rate at 40 litres per second 1. Bedroom balanced or negative with respect to the adjoining corridor. 2. Bedroom positive with respect to the en-suite sanitary room
NSGH-05-GENWD-024	NSGH Inpatient En-suite	6243	6248	4.5 m²	5.0 m²	9.5 metres	NA-ZE-05-PL-XXX-513	ZE	4	-	1 x patient 1-2 assistants Intermittent use	22	None	-	-	10	-	-
NSGH-05-GENWD-025	NSGH Inpatient En-suite	6246	6251	4.5 m²	5.3 m²	9.6 metres	NA-ZE-05-PL-XXX-513	ZE	4	-	1 x patient 1-2 assistants Intermittent use	22	None	-	-	10	-	-
NSGH-05-GENWD-026	Acute single bedroom (incl family & clinical support space)	6247	6252	16.5 m²	17.2 m²	17.1 metres	NA-ZE-05-PL-XXX-513	ZE	4	-	1 x Patient 4 x Others	22	26	26oC not to be exceeded for more than 50 hours per annum against CIBSE DSY weather data.	-	-	6	Supply air rate at 40 litres per second 1. Bedroom balanced or negative with respect to the adjoining corridor. 2. Bedroom positive with respect to the en-suite sanitary room
NSGH-05-GENWD-028	Acute single bedroom (incl family & clinical support space)	6250	6255	16.5 m²	17.0 m²	17.1 metres	NA-ZE-05-PL-XXX-513	ZE	4	-	1 x Patient 4 x Others	22	26	26oC not to be exceeded for more than 50 hours per annum against CIBSE DSY weather data.	-	-	6	Supply air rate at 40 litres per second 1. Bedroom balanced or negative with respect to the adjoining corridor. 2. Bedroom positive with respect to the en-suite sanitary room
NSGH-05-GENWD-029	NSGH Inpatient En-suite	6245	6250	4.5 m²	5.3 m²	9.6 metres	NA-ZE-05-PL-XXX-513	ZE	4	-	1 x patient 1-2 assistants Intermittent use	22	None	-	-	10	-	-
NSGH-05-GENWD-030	NSGH Inpatient En-suite	6222	6227	4.5 m²	5.3 m²	9.5 metres	NA-ZE-05-PL-XXX-513	ZE	4	-	1 x patient 1-2 assistants Intermittent use	22	None	-	-	10	-	-
NSGH-05-GENWD-031	Acute single bedroom (incl family & clinical support space)	6207	6212	16.5 m²	17.6 m²	17.0 metres	NA-ZE-05-PL-XXX-513	ZE	4	-	1 x Patient 4 x Others	22	26	26oC not to be exceeded for more than 50 hours per annum against CIBSE DSY weather data.	-	-	6	Supply air rate at 40 litres per second 1. Bedroom balanced or negative with respect to the adjoining corridor. 2. Bedroom positive with respect to the en-suite sanitary room
NSGH-05-GENWD-032	NSGH Inpatient En-suite	6235	6240	4.5 m²	6.7 m²	10.3 metres	NA-ZE-05-PL-XXX-513	ZE	4	-	1 x patient 1-2 assistants Intermittent use	22	None	-	-	10	-	-
NSGH-05-GENWD-033	Acute single bedroom (incl family & clinical support space)	6218	6223	16.5 m²	22.3 m²	20.7 metres	NA-ZE-05-PL-XXX-513	ZE	4	-	1 x Patient 4 x Others	22	26	26oC not to be exceeded for more than 50 hours per annum against CIBSE DSY weather data.	-	-	6	Supply air rate at 40 litres per second 1. Bedroom balanced or negative with respect to the adjoining corridor. 2. Bedroom positive with respect to the en-suite sanitary room
NSGH-05-GENWD-035	Acute single bedroom (incl family & clinical support space)	6216	6221	16.5 m²	16.9 m²	16.5 metres	NA-ZE-05-PL-XXX-513	ZE	4	-	1 x Patient 4 x Others	22	26	26oC not to be exceeded for more than 50 hours per annum against CIBSE DSY weather data.	-	-	6	Supply air rate at 40 litres per second 1. Bedroom balanced or negative with respect to the adjoining corridor. 2. Bedroom positive with respect to the en-suite sanitary room
NSGH-05-GENWD-036	NSGH Inpatient En-suite	6233	6238	4.5 m²	5.3 m²	9.5 metres	NA-ZE-05-PL-XXX-513	ZE	4	-	1 x patient 1-2 assistants Intermittent use	22	None	-	-	10	-	-
NSGH-05-GENWD-037	NSGH Inpatient En-suite	6223	6228	4.5 m²	5.3 m²	9.6 metres	NA-ZE-05-PL-XXX-513	ZE	4	-	1 x patient 1-2 assistants Intermittent use	22	None	-	-	10	-	-
NSGH-05-GENWD-038	Acute single bedroom (incl family & clinical support space)	6215	6220	16.5 m²	16.7 m²	17.5 metres	NA-ZE-05-PL-XXX-513	ZE	4	-	1 x Patient 4 x Others	22	26	26oC not to be exceeded for more than 50 hours per annum against CIBSE DSY weather data.	-	-	6	Supply air rate at 40 litres per second 1. Bedroom balanced or negative with respect to the adjoining corridor. 2. Bedroom positive with respect to the en-suite sanitary room
NSGH-05-GENWD-040	Acute single bedroom (incl family & clinical support space)	6214	6219	16.5 m²	17.0 m²	17.1 metres	NA-ZE-05-PL-XXX-513	ZE	4	-	1 x Patient 4 x Others	22	26	26oC not to be exceeded for more than 50 hours per annum against CIBSE DSY weather data.	-	-	6	Supply air rate at 40 litres per second 1. Bedroom balanced or negative with respect to the adjoining corridor. 2. Bedroom positive with respect to the en-suite sanitary room
NSGH-05-GENWD-041	NSGH Inpatient En-suite	6225	6230	4.5 m²	5.3 m²	9.6 metres	NA-ZE-05-PL-XXX-513	ZE	4	-	1 x patient 1-2 assistants Intermittent use	22	None	-	-	10	-	-
NSGH-05-GENWD-042	NSGH Inpatient En-suite	6221	6226	4.5 m²	5.3 m²	9.5 metres	NA-ZE-05-PL-XXX-513	ZE	4	-	1 x patient 1-2 assistants Intermittent use	22	None	-	-	10	-	-
NSGH-05-GENWD-043	Acute single bedroom (incl family & clinical support space)	6213	6218	16.5 m²	17.5 m²	17.1 metres	NA-ZE-05-PL-XXX-513	ZE	4	-	1 x Patient 4 x Others	22	26	26oC not to be exceeded for more than 50 hours per annum against CIBSE DSY weather data.	-	-	6	Supply air rate at 40 litres per second 1. Bedroom balanced or negative with respect to the adjoining corridor. 2. Bedroom positive with respect to the en-suite sanitary room
NSGH-05-GENWD-044	Acute single bedroom (incl family & clinical support space)	6212	6217	16.5 m²	17.6 m²	17.1 metres	NA-ZE-05-PL-XXX-513	ZE	4	-	1 x Patient 4 x Others	22	26	26oC not to be exceeded for more than 50 hours per annum against CIBSE DSY weather data.	-	-	6	Supply air rate at 40 litres per second 1. Bedroom balanced or negative with respect to the adjoining corridor. 2. Bedroom positive with respect to the en-suite sanitary room
NSGH-05-GENWD-045	NSGH Inpatient En-suite	6227	6232	4.5 m²	5.3 m²	9.5 metres	NA-ZE-05-PL-XXX-513	ZE	4	-	1 x patient 1-2 assistants Intermittent use	22	None	-	-	10	-	-
NSGH-05-GENWD-046	NSGH Inpatient En-suite	6224	6229	4.5 m²	5.3 m²	9.6 metres	NA-ZE-05-PL-XXX-513	ZE	4	-	1 x patient 1-2 assistants Intermittent use	22	None	-	-	10	-	-
NSGH-05-GENWD-047	Acute single bedroom (incl family & clinical support space)	6211	6216	16.5 m²	17.0 m²	17.1 metres	NA-ZE-05-PL-XXX-513	ZE	4	-	1 x Patient 4 x Others	22	26	26oC not to be exceeded for more than 50 hours per annum against CIBSE DSY weather data.	-	-	6	Supply air rate at 40 litres per second 1. Bedroom balanced or negative with respect to the adjoining corridor. 2. Bedroom positive with respect to the en-suite sanitary room
NSGH-05-GENWD-049	Acute single bedroom (incl family & clinical support space)	6210	6215	16.5 m²	17.0 m²	17.1 metres	NA-ZE-05-PL-XXX-513	ZE	4	-	1 x Patient 4 x Others	22	26	26oC not to be exceeded for more than 50 hours per annum against CIBSE DSY weather data.	-	-	6	Supply air rate at 40 litres per second 1. Bedroom balanced or negative with respect to the adjoining corridor. 2. Bedroom positive with respect to the en-suite sanitary room
NSGH-05-GENWD-050	NSGH Inpatient En-suite	6226	6231	4.5 m²	5.3 m²	9.6 metres	NA-ZE-05-PL-XXX-513	ZE	4	-	1 x patient 1-2 assistants Intermittent use	22	None	-	-	10	-	-
NSGH-05-GENWD-051	NSGH Inpatient En-suite	6228	6233	4.5 m²	5.3 m²	9.5 metres	NA-ZE-05-PL-XXX-512	ZE	4	-	1 x patient 1-2 assistants Intermittent use	22	None	-	-	10	-	-
NSGH-05-GENWD-052	Acute single bedroom (incl family & clinical support space)	6209	6214	16.5 m²	17.9 m²	17.3 metres	NA-ZE-05-PL-XXX-512	ZE	4	-	1 x Patient 4 x Others	22	26	26oC not to be exceeded for more than 50 hours per annum against CIBSE DSY weather data.	-	-	6	Supply air rate at 40 litres per second 1. Bedroom balanced or negative with respect to the adjoining corridor. 2. Bedroom positive with respect to the en-suite sanitary room
NSGH-05-GENWD-053	Acute single bedroom (incl family & clinical support space)	6217	6222	16.5 m²	19.6 m²	19.9 metres	NA-ZE-05-PL-XXX-512	ZE	4	-	1 x Patient 4 x Others	22	26	26oC not to be exceeded for more than 50 hours per annum against CIBSE DSY weather data.	-	-	6	Supply air rate at 40 litres per second 1. Bedroom balanced or negative with respect to the adjoining corridor. 2. Bedroom positive with respect to the en-suite sanitary room
NSGH-05-GENWD-056	NSGH Inpatient En-suite	6202	6207	4.5 m²	5.6 m²	9.9 metres	NA-ZE-05-PL-XXX-512	ZE	4	-	1 x patient 1-2 assistants Intermittent use	22	None	-	-	10	-	-
NSGH-05-GENWD-057	Acute single bedroom (incl family & clinical support space)	6206	6211	16.5 m²	16.8 m²	16.8 metres	NA-ZE-05-PL-XXX-512	ZE	4	-	1 x Patient 4 x Others	22	26	26oC not to be exceeded for more than 50 hours per annum against CIBSE DSY weather data.	-	-	6	Supply air rate at 40 litres per second 1. Bedroom balanced or negative with respect to the adjoining corridor. 2. Bedroom positive with respect to the en-suite sanitary room
NSGH-05-GENWD-058	NSGH Inpatient En-suite	6229	6234	4.5 m²	5.2 m²	9.4 metres	NA-ZE-05-PL-XXX-512	ZE	4	-	1 x patient 1-2 assistants Intermittent use	22	None	-	-	10	-	-
NSGH-05-GENWD-059	NSGH Inpatient En-suite	6231	6236	4.5 m²	5.1 m²	9.4 metres	NA-ZE-05-PL-XXX-512	ZE	4	-	1 x patient 1-2 assistants Intermittent use	22	None	-	-	10	-	-
NSGH-05-GENWD-060	Acute single bedroom (incl family & clinical support space)	6208	6213	16.5 m²	16.9 m²	17.9 metres	NA-ZE-05-PL-XXX-512	ZE	4	-	1 x Patient 4 x Others	22	26	26oC not to be exceeded for more than 50 hours per annum against CIBSE DSY weather data.	-	-	6	Supply air rate at 40 litres per second 1. Bedroom balanced or negative with respect to the adjoining corridor. 2. Bedroom positive with respect to the en-suite sanitary room
NSGH-05-GENWD-062	Acute single bedroom (incl family & clinical support space)	6219	6224	16.5 m²	17.0 m²	17.0 metres	NA-ZE-05-PL-XXX-512	ZE	4	-	1 x Patient 4 x Others	22	26	26oC not to be exceeded for more than 50 hours per annum against CIBSE DSY weather data.	-	-	6	Supply air rate at 40 litres per second 1. Bedroom balanced or negative with respect to the adjoining corridor. 2. Bedroom positive with respect to the en-suite sanitary room
NSGH-05-GENWD-063	NSGH Inpatient En-suite	6230	6235	4.5 m²	5.1 m²	9.4 metres	NA-ZE-05-PL-XXX-512	ZE	4	-	1 x patient 1-2 assistants Intermittent use	22	None	-	-	10	-	-
NSGH-05-GENWD-064	NSGH Inpatient En-suite	6232	6237	4.5 m²	5.2 m²	9.4 metres	NA-ZE-05-PL-XXX-512	ZE	4	-	1 x patient 1-2 assistants Intermittent use	22	None	-	-	10	-	-
NSGH-05-GENWD-065	Acute single bedroom (incl family & clinical support space)	6203	6208	16.5 m²	16.8 m²	17.7 metres	NA-ZE-05-PL-XXX-512	ZE	4	-	1 x Patient 4 x Others	22	26	26oC not to be exceeded for more than 50 hours per annum against CIBSE DSY weather data.	-	-	6	Supply air rate at 40 litres per second 1. Bedroom balanced or negative with respect to the adjoining corridor. 2. Bedroom positive with respect to the en-suite sanitary room
NSGH-05-GENWD-005	Touch Down Spaces	6268	6273	2.0 m²	1.8 m²	5.8 metres	NA-ZE-05-PL-XXX-514	ZE	4	-	1 x Staff	21	None	-	-	-	-	Supply air to balance extract from other areas
NSGH-05-GENWD-018	Touch Down Spaces	6266	6271	2.0 m²	1.8 m²	5.8 metres	NA-ZE-05-PL-XXX-513	ZE	4	-	1 x Staff	21	None	-	-	-	-	Supply air to balance extract from other areas
NSGH-05-GENWD-027	Touch Down Spaces	6265	6270	2.0 m²	1.8 m²	5.8 metres	NA-ZE-05-PL-XXX-513	ZE	4	-	1 x Staff	21	None	-	-	-	-	Supply air to balance extract from other areas
NSGH-05-GENWD-039	Touch Down Spaces	6269	6274	2.0 m²	1.8 m²	5.8 metres	NA-ZE-05-PL-XXX-513	ZE	4	-	1 x Staff	21	None	-	-	-	-	Supply air to balance extract from other areas
NSGH-05-GENWD-048	Touch Down Spaces	6264	6269	0.0 m²	1.8 m²	5.8 metres	NA-ZE-05-PL-XXX-513	ZE	4	-	1 x Staff	21	None	-	-	-	-	Supply air to balance extract from other areas
NSGH-05-GENWD-061	Touch Down Spaces	6267	6272	0.0 m²	1.8 m²	5.8 metres	NA-ZE-05-PL-XXX-512	ZE	4	-	1 x Staff	21	None	-	-	-	-	Supply air to balance extract from other areas
NSGH-05-GENWD-071	Interview/sitting room	6261	6266	9.0 m²	9.0 m²	12.2 metres	NA-ZE-05-PL-XXX-512	ZE	4	-	Up to 4 persons	21	26	26oC not to be exceeded for more than 50 hours per annum against CIBSE DSY weather data.	-	-	-	Air volume to suit occupancy at 10 litres per second per person
NSGH-05-GENWD-072	Resuscitation trolley parking bay: 1 trolley	6258	6263	2.0 m²	2.0 m²	6.5 metres	NA-ZE-05-PL-XXX-512	ZE	4	-	1 x Staff Intermittent use	16	None	-	-	-	-	-
NSGH-05-GENWD-073	Nurses Station & Reception	6263	6268	16.0 m²	17.2 m²	22.3 metres	NA-ZE-05-PL-XXX-514	ZE	4	-	2 x Staff	21	26	26oC not to be exceeded for more than 50 hours per annum against CIBSE DSY weather data.	-	-	-	Air volume to suit occupancy at 10 litres per second per person
NSGH-05-GENWD-077	Pantry/Beverage making area	6259	6264	12.0 m²	13.6 m²	15.2 metres	NA-ZE-05-PL-XXX-514	ZE	4	-	Intermittent use	18	None	-	-	6	5	Minimum air changes per hour (AC/hr): 6
NSGH-05-GENWD-078	Ward Food trolley parking bay	6260	6265	1.5 m²	1.2 m²	5.1 metres	NA-ZE-05-PL-XXX-514	ZE	4	-	Intermittent use	16	None	-	-	-	-	-
NSGH-05-GENWD-084	Wheelchair bay	6262	6267	4.0 m²	4.7 m²	9.6 metres	NA-ZE-05-PL-XXX-513	ZE	4	-	-	16	None	-	-	-	-	-
NSGH-05-GENWD-075	Equipment Bay L	6271	6276	1.5 m²	1.9 m²	5.9 metres	NA-ZE-05-PL-XXX-512	ZE	4	-	-	16	None	-	-	-	-	-

NSGH-05-GENWD-076	Large Eqpt Store	6270	6275	7.5 m²	6.2 m²	11.6 metres	NA-ZE-05-PL-XXX-514	ZE	4	-	1 x Staff Intermittent use	16	None	-	-	-	1.5	Mechanical ventilation (supply): Mechanical ventilation required if internal location.
NSGH-05-GENWD-081	Clean Utility Room & Clinical Store/Controlled drug Cupboard & Clinical supplies trolley	6272	6277	15.0 m²	17.3 m²	17.5 metres	NA-ZE-05-PL-XXX-513	ZE	4	-	2 x Staff	20	25	-	-	-	6	-
NSGH-05-GENWD-054	Electrical Riser RE34	6285	6290	0.0 m²	1.9 m²	6.8 metres	NA-ZE-05-PL-XXX-512	ZE	4			None	None					
NSGH-05-GENWD-055	Electrical / IT cupboard	6276	6281	1.0 m²	5.0 m²	9.2 metres	NA-ZE-05-PL-XXX-512	ZE	4	-	N/A	None	None	-	-	-	-	-
NSGH-05-GENWD-066	Cleaners room	6273	6278	7.0 m²	7.4 m²	11.2 metres	NA-ZE-05-PL-XXX-512	ZE	4	-	2 x Staff Intermittent use	16	None	-	-	6	-	-
NSGH-05-GENWD-068	Mechanical Riser T4	6282	6287	0.0 m²	29.5 m²	27.4 metres	NA-ZE-05-PL-XXX-512	ZE	4			None	None					
NSGH-05-GENWD-074	Corridor	6280	6285	0.0 m²	63.2 m²	58.9 metres	NA-ZE-05-PL-XXX-514	ZE	4			18	None					
NSGH-05-GENWD-074_1	Lobby	7944	7949	0.0 m²	5.8 m²	9.7 metres	NA-ZE-05-PL-XXX-514	ZE	4			18	None					
NSGH-05-GENWD-079	Dirty utility/Sluice/Test Room - small	6275	6280	6.5 m²	7.9 m²	12.8 metres	NA-ZE-05-PL-XXX-513	ZE	4	-	2 x Staff Intermittent use	18	None	-	-	10	-	-
NSGH-05-GENWD-080	Dirty utility/Disposal hold	6274	6279	8.0 m²	7.7 m²	11.5 metres	NA-ZE-05-PL-XXX-513	ZE	4	-	1 x Staff Intermittent use	18	None	-	-	10	-	-
NSGH-05-GENWD-082	Mechanical Riser T3	6283	6288	0.0 m²	14.1 m²	17.3 metres	NA-ZE-05-PL-XXX-513	ZE	4			None	None					
NSGH-05-GENWD-083	Staff Disabled WC	6277	6282	2.0 m²	5.5 m²	10.0 metres	NA-ZE-05-PL-XXX-513	ZE	4	-	1 x Person Intermittent use	20	None	-	-	10	-	-
NSGH-05-GENWD-085	Electrical Riser RE33	6278	6283	0.0 m²	2.4 m²	6.8 metres	NA-ZE-05-PL-XXX-513	ZE	4	-	N/A	None	None	-	-	-	-	-
NSGH-05-GENWD-086	Electrical Cupboard	6284	6289	0.0 m²	1.7 m²	6.3 metres	NA-ZE-05-PL-XXX-513	ZE	4			None	None					
NSGH-05-GENWD-087	Corridor	6279	6284	0.0 m²	77.2 m²	67.0 metres	NA-ZE-05-PL-XXX-513	ZE	4			18	None					
NSGH-05-GENWD-087_1	Corridor	8239	8245	0.0 m²	55.8 m²	54.1 metres	NA-ZE-05-PL-XXX-513	ZE	4			18	None					
NSGH-05-GENWD-088	Corridor	6281	6286	0.0 m²	72.8 m²	66.1 metres	NA-ZE-05-PL-XXX-512	ZE	4			18	None					
NSGH-05-GENWD-089	Corridor	6286	6291	0.0 m²	41.4 m²	43.3 metres	NA-ZE-05-PL-XXX-514	ZE	4			18	None					
NSGH-05-GENWD-090	Corridor	6287	6292	0.0 m²	34.6 m²	35.4 metres	NA-ZE-05-PL-XXX-512	ZE	4			18	None					
NSGH-05-GENWD-067	Printer/IT/Admin Store Room	6290	6295	6.0 m²	5.8 m²	9.9 metres	NA-ZE-05-PL-XXX-512	ZE	4	-	-	16	None	-	-	1.5	-	-
NSGH-05-GENWD-069	Charge Nurse/Sister s Office (2P)	6289	6294	9.0 m²	8.5 m²	12.0 metres	NA-ZE-05-PL-XXX-512	ZE	4	-	1 x Staff 3 x Others	21	26	26oC not to be exceeded for more than 50 hours per annum against CIBSE DSY weather data.	-	-	-	Air volume to suit occupancy at 10 litres per second per person
NSGH-05-GENWD-070	Office (1P) + meeting area	6288	6293	12.0 m²	11.9 m²	14.9 metres	NA-ZE-05-PL-XXX-512	ZE	4	-	Up to 7 persons	21	26	26oC not to be exceeded for more than 50 hours per annum against CIBSE DSY weather data.	-	-	-	Air volume to suit occupancy at 10 litres per second per person
NSGH-05-GENWD-034	Socialisation Space	6291	6296	24.0 m²	34.1 m²	30.5 metres	NA-ZE-05-PL-XXX-513	ZE	4	-	20 xpatients	22	26	26oC not to be exceeded for more than 50 hours per annum against CIBSE DSY weather data.	-	-	-	Air volume to suit occupancy at 10 litres per second per person
NSGH-05-WS5-002	Core A Computer communication: IT hub room	6313	6318	9.0 m²	12.3 m²	14.5 metres	NA-ZK-05-PL-XXX-502	ZK	4	-	N/A	16	25	Summer temperature control maybe required depending on type of battery used.	-	-	-	Mechanical ventilation (supply): Natural or mechanical ventilation may be required depending on type of battery used.
NSGH-05-WS5-003	Semi-Ambulant WC Public	6296	6301	2.0 m²	3.3 m²	7.9 metres	NA-ZK-05-PL-XXX-502	ZK	4	-	1 x Person Intermittent use	20	None	-	-	10	-	-
NSGH-05-WS5-004	Core A Wait Lobby	6295	6300	0.0 m²	5.8 m²	9.6 metres	NA-ZK-05-PL-XXX-502	ZK	4			21	None					Air volume to suit occupancy at 10 litres per second per person
NSGH-05-WS5-005	Disabled WC Public	6298	6303	4.5 m²	4.5 m²	8.6 metres	NA-ZK-05-PL-XXX-502	ZK	4	-	1 x Person Intermittent use	20	None	-	-	10	-	-
NSGH-05-WS5-006	Core A Ward 1 & 4 Waiting Area	6311	6316	24.0 m²	30.6 m²	22.7 metres	NA-ZK-05-PL-XXX-502	ZK	4	-	10 x Persons; including wheelchair user.	21	None	-	-	-	-	Air volume to suit occupancy at 10 litres per second per person
NSGH-05-WS5-008	Core B Computer communication: IT hub room	6314	6319	9.0 m²	12.3 m²	14.5 metres	NA-ZK-05-PL-XXX-501	ZK	4	-	N/A	16	25	Summer temperature control maybe required depending on type of battery used.	-	-	-	Mechanical ventilation (supply): Natural or mechanical ventilation may be required depending on type of battery used.
NSGH-05-WS5-009	Semi-Ambulant WC Public	6303	6308	2.0 m²	3.3 m²	7.8 metres	NA-ZK-05-PL-XXX-501	ZK	4	-	1 x Person Intermittent use	20	None	-	-	10	-	-
NSGH-05-WS5-010	Core B Wait Lobby	6301	6306	4.5 m²	5.8 m²	9.6 metres	NA-ZK-05-PL-XXX-501	ZK	4	-	3 x Persons	21	None	-	-	-	-	Air volume to suit occupancy at 10 litres per second per person
NSGH-05-WS5-011	Disabled WC Public	6304	6309	4.5 m²	4.5 m²	8.6 metres	NA-ZK-05-PL-XXX-501	ZK	4	-	1 x Person Intermittent use	20	None	-	-	10	-	-
NSGH-05-WS5-012	Core B Ward 2 & 3 Waiting Area	6312	6317	24.0 m²	30.6 m²	22.7 metres	NA-ZK-05-PL-XXX-501	ZK	4	-	10 x Persons; including wheelchair user.	21	None	-	-	-	-	Air volume to suit occupancy at 10 litres per second per person
NSGH-05-WS5-013	Store	6323	6328	12.0 m²	12.4 m²	14.8 metres	NA-ZE-05-PL-XXX-512	ZE	4	-	1 x Staff Intermittent use	16	None	-	-	-	1.5	Mechanical ventilation (supply): Mechanical ventilation required if internal location.
NSGH-05-WS5-014	Core C Trolley Hold	6293	6298	8.0 m²	10.9 m²	13.8 metres	NA-ZK-05-PL-XXX-502	ZK	4	-	1 x Staff Intermittent use	16	None	-	-	10	-	-
NSGH-05-WS5-015	Core C Trolley Hold	6292	6297	8.0 m²	10.9 m²	13.8 metres	NA-ZK-05-PL-XXX-502	ZK	4	-	1 x Staff Intermittent use	16	None	-	-	10	-	-
NSGH-05-WS5-016	FM Hold	6294	6299	0.0 m²	25.2 m²	26.4 metres	NA-ZK-05-PL-XXX-502	ZK	4	-	1 x Staff Intermittent use	16	None	-	-	10	-	-
NSGH-05-WS5-018	Regen Kitchen & Washup	6308	6313	42.0 m²	49.5 m²	34.0 metres	NA-ZK-05-PL-XXX-502	ZK	4	-	Intermittent use	18	None	-	-	6	-	Minimum air changes per hour (AC/hr): 6
NSGH-05-WS5-019	Disabled WC	6325	6330	4.5 m²	5.3 m²	9.3 metres	NA-ZK-05-PL-XXX-501	ZK	4	-	1 x patient 1-2 assistants Intermittent use	22	None	-	-	10	-	-
NSGH-05-WS5-020	Ambulant WC	6320	6325	2.0 m²	2.1 m²	5.8 metres	NA-ZK-05-PL-XXX-501	ZK	4	-	1 x Person Intermittent use	20	None	-	-	10	-	-
NSGH-05-WS5-021	Staff Change - Male	6322	6327	8.0 m²	8.0 m²	11.6 metres	NA-ZK-05-PL-XXX-501	ZK	4	-	15 x Staff	21	None	-	-	6	5	Extract to included WC/shower cubicles within changing area
NSGH-05-WS5-022	Ambulant Shower	6318	6323	4.0 m²	3.5 m²	7.7 metres	NA-ZK-05-PL-XXX-501	ZK	4	-	1 x person (staff or visitor) Intermittent use	22	None	-	-	10	-	-
NSGH-05-WS5-023	Ambulant Shower	6317	6322	4.0 m²	3.8 m²	7.9 metres	NA-ZK-05-PL-XXX-501	ZK	4	-	1 x person (staff or visitor) Intermittent use	22	None	-	-	10	-	-
NSGH-05-WS5-024	Ambulant WC	6319	6324	2.0 m²	2.4 m²	6.3 metres	NA-ZK-05-PL-XXX-501	ZK	4	-	1 x Person Intermittent use	20	None	-	-	10	-	-
NSGH-05-WS5-025	Ambulant WC	6321	6326	2.0 m²	2.2 m²	6.1 metres	NA-ZK-05-PL-XXX-501	ZK	4	-	1 x Person Intermittent use	20	None	-	-	10	-	-
NSGH-05-WS5-026	Staff Change - Female	6309	6314	24.0 m²	23.8 m²	25.0 metres	NA-ZK-05-PL-XXX-501	ZK	4	-	60 x Staff	21	None	-	0 -	6	5	Extract to included WC/shower cubicles within changing area
NSGH-05-WS5-027	Cleaner	6310	6315	7.0 m²	9.1 m²	12.3 metres	NA-ZK-05-PL-XXX-501	ZK	4	-	2 x Staff Intermittent use	16	None	-	-	6	-	-
NSGH-05-WS5-028	FM Hold	6300	6305	26.0 m²	23.7 m²	26.0 metres	NA-ZK-05-PL-XXX-501	ZK	4	-	1 x Staff Intermittent use	16	None	-	-	10	-	-
NSGH-05-WS5-029	Core D Trolley Hold	6299	6304	8.0 m²	10.9 m²	13.8 metres	NA-ZK-05-PL-XXX-501	ZK	4	-	1 x Staff Intermittent use	16	None	-	-	10	-	-
NSGH-05-WS5-030	Store	6324	6329	12.0 m²	12.3 m²	14.8 metres	NA-ZF-05-PL-XXX-505	ZF	4	-	1 x Staff Intermittent use	16	None	-	-	-	1.5	Mechanical ventilation (supply): Mechanical ventilation required if internal location.
NSGH-05-WS5-034	Office POD (4P)	6306	6311	11.5 m²	13.0 m²	14.6 metres	NA-ZK-05-PL-XXX-501	ZK	4	-	Up to 3 persons	21	26	26oC not to be exceeded for more than 50 hours per annum against CIBSE DSY weather data; but not on successive days.	-	-	-	Air volume to suit occupancy at 10 litres per second per person
NSGH-05-WS5-035	Medicines Management POD (3P)	6315	6320	12.0 m²	13.0 m²	14.6 metres	NA-ZK-05-PL-XXX-501	ZK	4	-	Up to 3 persons	21	26	26oC not to be exceeded for more than 50 hours per annum against CIBSE DSY weather data; but not on successive days.	-	-	-	Air volume to suit occupancy at 10 litres per second per person
NSGH-05-WS5-036	Office POD (4P)	6307	6312	11.5 m²	13.0 m²	14.6 metres	NA-ZK-05-PL-XXX-502	ZK	4	-	Up to 3 persons	21	26	26oC not to be exceeded for more than 50 hours per annum against CIBSE DSY weather data; but not on successive days.	-	-	-	Air volume to suit occupancy at 10 litres per second per person
NSGH-05-WS5-037	FM Corridor	6305	6310	0.0 m²	106.5 m²	68.2 metres	NA-ZK-05-PL-XXX-502	ZK	4			18	None					
NSGH-05-WS5-038	Electrical Cupboard	7856	7861	0.0 m²	0.7 m²	3.6 metres	NA-ZK-05-PL-XXX-502	ZK	4			None	None					
NSGH-05-WS5-017	Beverage Bay	8062	8068	12.0 m²	10.8 m²	14.2 metres	NA-ZK-05-PL-XXX-501	ZK	4	-	Intermittent use	20	None	-	-	6	-	-
NSGH-05-WS5-032	Bulk Fluids & Clean Dressings Store	6328	6333	28.0 m²	39.5 m²	26.8 metres	NA-ZK-05-PL-XXX-501	ZK	4	-	2 x Staff	16	None	-	-	-	1.5	Mechanical ventilation (supply): Mechanical ventilation required if internal location.
NSGH-05-WS5-033	Seminar / Education Room	6326	6331	40.0 m²	39.6 m²	26.3 metres	NA-ZK-05-PL-XXX-501	ZK	4			21	26	26oC not to be exceeded for more than 50 hours per annum against CIBSE DSY weather data; but not on successive days.				Air volume to suit occupancy at 10 litres per second per person
NSGH-05-CA5-001	Core A Lobby	6346	6351	0.0 m²	9.1 m²	12.4 metres	NA-ZK-05-PL-XXX-502	ZK	4			18	None					
NSGH-05-CA5-002	Core A Public Lift Lobby	6345	6350	0.0 m²	46.4 m²	38.7 metres	NA-ZK-05-PL-XXX-502	ZK	4			18	None					
NSGH-05-CA5-003	Core A Public Lift	6344	6349	0.0 m²	6.4 m²	10.1 metres	NA-ZK-05-PL-XXX-502	ZK	4			None	None					
NSGH-05-CA5-004	Core A Public Lift	6343	6348	0.0 m²	6.4 m²	10.1 metres	NA-ZK-05-PL-XXX-502	ZK	4			None	None					
NSGH-05-CA5-005	Core A Public Lift	6342	6347	0.0 m²	6.4 m²	10.1 metres	NA-ZK-05-PL-XXX-502	ZK	4			None	None					
NSGH-05-CA5-006	Core A Riser	6361	6366	0.0 m²	3.8 m²	10.7 metres	NA-ZK-05-PL-XXX-502	ZK	4			None	None					
NSGH-05-CA5-007	Core A Smoke Vent	6360	6365	0.0 m²	1.2 m²	5.7 metres	NA-ZK-05-PL-XXX-502	ZK	4			None	None					
NSGH-05-CA5-008	Core A Stair	6347	6352	0.0 m²	39.9 m²	32.0 metres	NA-ZK-05-PL-XXX-502	ZK	4			18	None					
NSGH-05-CA5-009	Core B Lobby	6357	6362	0.0 m²	9.0 m²	12.4 metres	NA-ZK-05-PL-XXX-501	ZK	4			18	None					
NSGH-05-CA5-010	Core B Public Lift Lobby	6355	6360	0.0 m²	46.4 m²	38.7 metres	NA-ZK-05-PL-XXX-501	ZK	4			18	None					
NSGH-05-CA5-011	Core B Public Lift	6353	6358	0.0 m²	6.4 m²	10.1 metres	NA-ZK-05-PL-XXX-501	ZK	4			None	None					
NSGH-05-CA5-012	Core B Public Lift	6352	6357	0.0 m²	6.4 m²	10.1 metres	NA-ZK-05-PL-XXX-501	ZK	4			None	None					
NSGH-05-CA5-013	Core B Public Lift	6354	6359	0.0 m²	6.4 m²	10.1 metres	NA-ZK-05-PL-XXX-501	ZK	4			None	None					
NSGH-05-CA5-014	Core B Riser	6362	6367	0.0 m²	3.8 m²	10.7 metres	NA-ZK-05-PL-XXX-501	ZK	4			None	None					
NSGH-05-CA5-015	Core B Smoke Vent	6359	6364	0.0 m²	1.2 m²	5.7 metres	NA-ZK-05-PL-XXX-501	ZK	4			None	None					
NSGH-05-CA5-016	Core B Stair	6356	6361	0.0 m²	39.9 m²	32.0 metres	NA-ZK-05-PL-XXX-501	ZK	4			18	None					
NSGH-05-CA5-017	Core C Bed/Patient Lift Lobby	6339	6344	0.0 m²	62.3 m²	40.9 metres	NA-ZK-05-PL-XXX-502	ZK	4			18	None					
NSGH-05-CA5-017_1	Core C Lobby	7943	7948	0.0 m²	32.2 m²	26.8 metres	NA-ZK-05-PL-XXX-502	ZK	4			18	None					
NSGH-05-CA5-018	Core C FM Lift	6338	6343	0.0 m²	8.7 m²	11.9 metres	NA-ZK-05-PL-XXX-502	ZK	4			None	None					
NSGH-05-CA5-019	Core C FM Lift	6337	6342	0.0 m²	8.7 m²	11.9 metres	NA-ZK-05-PL-XXX-502	ZK	4			None	None					
NSGH-05-CA5-020	Core C Bed/Patient Lift	6334	6339	0.0 m²	9.7 m²	12.5 metres	NA-ZK-05-PL-XXX-502	ZK	4			None	None					
NSGH-05-CA5-021	Core C Bed/Patient Lift	6340	6345	0.0 m²	9.7 m²	12.5 metres	NA-ZK-05-PL-XXX-502	ZK	4			None	None					
NSGH-05-CA5-022	Core C Bed/Patient Lift	6336	6341	0.0 m²	9.7 m²	12.5 metres	NA-ZK-05-PL-XXX-502	ZK	4			None	None					
NSGH-05-CA5-023	Core C Bed/Patient Lift	6333	6338	0.0 m²	9.7 m²	12.5 metres	NA-ZK-05-PL-XXX-502	ZK	4			None	None					
NSGH-05-CA5-024	Core C Bed/Patient Lift	6341	6346	0.0 m²	9.7 m²	12.5 metres	NA-ZK-05-PL-XXX-502	ZK	4			None	None					
NSGH-05-CA5-025	Core C Bed/Patient Lift	6335	6340	0.0 m²	9.7 m²	12.5 metres	NA-ZK-05-PL-XXX-502	ZK	4			None	None					
NSGH-05-CA5-026	Core D Lobby	6351	6356	0.0 m²	38.6 m²	31.4 metres	NA-ZK-05-PL-XXX-501	ZK	4			18	None					
NSGH-05-CA5-026_1	Core D Lobby	7940	7945	0.0 m²	15.5 m²	16.0 metres	NA-ZF-05-PL-XXX-505	ZF	4			18	None					
NSGH-05-CA5-027	Core D FM Lift Lobby	6350	6355	0.0 m²	22.5 m²	20.2 metres	NA-ZK-05-PL-XXX-501	ZK	4			None	None					
NSGH-05-CA5-028	Core D FM Lift	6349	6354	0.0 m²	11.7 m²	13.7 metres	NA-ZK-05-PL-XXX-501	ZK	4			None	None					
NSGH-05-CA5-029	Core D FM Lift	6348	6353	0.0 m²	11.7 m²	13.7 metres	NA-ZK-05-PL-XXX-501	ZK	4			None	None					
NSGH-05-CA5-030	Core G Lobby	6358	6363	0.0 m²	8.5 m²	12.9 metres	NA-ZE-05-PL-XXX-513	ZE	4			18	None					
NSGH-05-CA5-031	Core G Bed Lift Lobby	6332	6337	0.0 m²	24.5 m²	23.2 metres	NA-ZE-05-PL-XXX-513	ZE	4			18	None					
NSGH-05-CA5-031_1	Core G Smoke Vent	8132	8138	0.0 m²	0.7 m²	4.4 metres	NA-ZE-05-PL-XXX-513	ZE	4			None	None					
NSGH-05-CA5-032	Core G Stair	6330	6335	0.0 m²	30.5 m²	23.7 metres	NA-ZE-05-PL-XXX-513	ZE	4			18	None					

NSGH-05-CA5-033	Core G Bed Lift	6363	6368	0.0 m²	8.5 m²	11.8 metres	NA-ZE-05-PL-XXX-513	ZE	4			None	None					
NSGH-05-CA5-034	Core G Bed Lift	6331	6336	0.0 m²	13.1 m²	14.5 metres	NA-ZE-05-PL-XXX-513	ZE	4			None	None					
NSGH-05-CA5-035	Core G Riser	6329	6334	0.0 m²	0.3 m²	2.2 metres	NA-ZE-05-PL-XXX-513	ZE	4			None	None					
NSGH-05-CA5-036	Core C FM Lift Lobby	6364	6369	0.0 m²	26.8 m²	21.5 metres	NA-ZK-05-PL-XXX-502	ZK	4			None	None					
NSGH-05-CA5-037	Core C Riser	6365	6370	0.0 m²	13.7 m²	25.2 metres	NA-ZK-05-PL-XXX-502	ZK	4			None	None					
NSGH-05-CA5-038	Core D Riser	6366	6371	0.0 m²	12.5 m²	23.2 metres	NA-ZK-05-PL-XXX-501	ZK	4			None	None					
NSGH-05-CA5-039	Core C Riser	8222	8228	0.0 m²	6.3 m²	12.5 metres	NA-ZK-05-PL-XXX-502	ZK	4			None	None					

NEW SOUTH GLASGOW HOSPITALS

SPECIFICATION VENTILATION SYSTEM

Ref: ZBP-XX-XX-SP-524-303

Status: Construction T3

Rev: B

Date: August 2012

ZBP
Zisman Bowyer & Partners LLP
Consulting Engineers

SPECIFICATION CHECK / REVISION SHEET

PROJECT	**New South Glasgow Hospitals**	**PROJECT NUMBER**	**2900**
SERVICE (S)	**Mechanical**	**REF**	**ZBP-XX-XX-SP-524-303**
SPECIFICATION TITLE	**Ventilation System**	**DATE**	**February 2012**
PREPARED BY	**EP**	**CHECKED BY**	**SP**

Revision Ref.	Date of Revision	Page N°(s).	Revision Details	Checked By
01	01/06/10	-	Initial issue for comment	SP
02	11/08/10	-	Revised following comments made by Brookfield & fan motor efficiencies changed to EFF1 standard	SP
A	03/02/12	various	Amended as indicated. Issued for Construction T3	SP
B	Aug 12	14, 27 & 31	Revised following receipt of further comments	AP

OVERALL FRAMEWORK OF TENDER DOCUMENTATION
VENTILATION SYSTEM TECHNICAL SPECIFICATION

CONTRACT DOCUMENTATION- PRELIMINARIES

General Preliminaries

VENTILATION SYSTEM TECHNICAL SPECIFICATION

CONTENTS

PARTICULAR SPECIFICATION
Ventilation System

MATERIALS AND WORKMANSHIP CLAUSES
T51, U10, U41, U60, U80, U81, U82, U83, U84, U85, U86, U87, U88

APPENDICES
Specification Appendices and Technical Schedules

NBS CLAUSES Y CLAUSES

See separate document

DRAWINGS

ARCHITECT DRAWINGS

ZBP DRAWINGS

NEW SOUTH GLASGOW HOSPITALS
VENTILATION SYSTEM

CONTENTS

1.0 GENERAL INTRODUCTION
2.0 SCOPE
3.0 SPECIFIC EXCLUSIONS
4.0 INTERFACES AND DEMARCATIONS
5.0 APPLICABLE STANDARDS
6.0 DESIGN CRITERIA
7.0 LIAISON
8.0 SYSTEM DESCRIPTION

MATERIALS AND WORKMANSHIP CLAUSES

T51 *CLIMATIC CEILINGS AND BEAM SYSTEMS*
U10 VENTILATION SYSTEMS
U41 FAN COIL UNITS
U60 LOCAL *AND ROOM* AIR CONDITIONING SYSTEMS
U80 AIR DUCTWORK AND ANCILLARIES
U81 AIR HANDLING UNITS
U82 FANS
U83 AIR FILTRATION
U84 HEATING AND COOLING COILS
U85 HEAT RECOVERY
U86 AIR TREATMENT
U87 SILENCERS AND ACOUSTIC TREATMENT
U88 AIR TERMINAL DEVICES

APPENDICES

A SUPPORTING DOCUMENTATION

1.0 GENERAL INTRODUCTION

Purpose of Document

The manufacture, supply, installation, wiring, setting to work and commissioning of the works described in this document shall be undertaken by the Mechanical and Electrical Contractor and is referred to in this document as “Sub-contractor”.

To carry out the development of the design, the Sub-contractor shall obtain the necessary supporting documentation including but not limited to that listed in Appendix A.

This specification shall be read in conjunction with all other mechanical and electrical engineering services specifications and the Architectural drawings.

2.0 SCOPE

The scope of work covered by this Specification shall include the following:-

- Ventilation System, including:-
  - Kitchen extract equipment
  - Fan coil units
  - Variable air volume terminal units
  - Local air conditioning systems
  - Air ductwork and ancillaries
  - Air handling units
  - Fans
  - Air filtration
  - Heating and cooling coils
  - Heat recovery
  - Air treatment
  - Silencers and acoustic treatment
  - Air terminal devices

3.0 SPECIFIC EXCLUSIONS

The following is specifically excluded from the scope of this Specification:-

- BMS and automatic control systems
- Insulation
- Louvres in external façade
- Kitchen canopies/hoods

4.0 INTERFACES AND DEMARCATIONS

The Ventilation Systems shall be provided as a complete working system serving the Adult and Children's Hospitals.

The Sub-contractor shall provide information to other parties for power supplies, controls and fire alarm system interfaces.

5.0 APPLICABLE STANDARDS

All elements of the works shall be in accordance with the requirements of current legislation, regulations and industry standards unless otherwise stated.

The Ventilation System shall accord with all appropriate Hospital Technical Memoranda, Codes of Practice and relevant British and European Standards and Appendix A.

The equipment supplied shall conform to all relevant standards and regulations in force. The equipment shall be supplied with relevant Declarations of Conformity to certify compliance with the EMC directive 89/336/EEC-92/31/EEC and the Machinery Safety Directive 89/392/EEC-91/368/EEC-93/44/EEC. Also the equipment and installation shall comply with all relevant statutory requirements in force at the time:

6.0 DESIGN CRITERIA

LV power characteristics: 400/230 V, 3-phase, 50 Hz, 230 V, 1-phase, 50 Hz.

External Design Conditions

Winter	-6°C sat
Summer	26.2°C db 18.5°C wb
For operating theatre plant	30°C db 20°C wb
Sizing for refrigeration plant	30°C

Primary MTHW Flow Temperature	*105°C*
Primary MTHW Return Temperature	*75°C*
Secondary LTHW Flow Temperature	*75°C*
Secondary LTHW Return Temperature	*60°C*

Primary MTHW Operating Pressure	*4.5 Bar*
Secondary LTHW Operating Pressure	*Refer to pressurisation plant schedule*
Primary Chilled Water Flow Temp *(at EC)*	*Minimum 6°C*
	Maximum 10°C
Primary Chilled Water Return Temp *(at EC)*	14°C
Primary Chilled Water Flow Temp (at PHE)	*7°C*
Primary Chilled Water Return Temp (at PHE)	*13°C*
Secondary Chilled Water Flow Temperature	Minimum 8°C
	Maximum 12°C
Secondary Chilled Water Return Temperature	Minimum 13°C
	Maximum 16°C
Chilled Beam Flow Temperature	15°C
Chilled Beam Return Temperature	18°C
Primary Chilled Water Operating Pressure	3.0 Bar
Secondary Chilled Water Operating Pressure	Refer to pressurisation plant schedule
Limiting noise criteria *at site boundary*	*Refer to Acoustic Consultant's Report*
Room noise criteria	*Refer to Acoustic Consultant's Report*

For ventilation/air change rates *used in the design*, the Sub-contractor shall refer to the ADB sheets.

7.0 LIAISON

The Sub-contractor shall include for liaison with:-

Health and Safety Professionals. As well as the Health and Safety requirements of this specification, the Sub-contractor shall include for close liaison with Health and Safety professionals including the Hospital's Health and Safety Advisors and the CDM Co-ordinator and shall comply with the CDM Regulations and all Health and Safety Regulations.

The Contractor. The Sub-contractor shall liaise with the Contractor through whom all communications must flow. Drawings and other documentation shall be available via the Contractor. The Sub-contractor shall include for liaison with members of the Contractor's team with an interest in the planning and administration of the Ventilation System.

Other Specialist Sub-contractors. The Sub-contractor shall liaise with other specialist Sub-contractors as necessary to ensure that all interfaces and co-ordination between the Fire Detection and Alarm System and other systems are allowed for. This shall include but not be limited to:-

- Building Management System specialist
- Fire Alarm and Detection specialist
- Other disciplines for co-ordination
- Fire Protect Systems specialist
- Kitchen Specialist

The Hospital. The Sub-contractor shall include for liaison in conjunction with the Contractor with members of the Hospital's team with an interest in the planning and administration of the Ventilation System.

The Architect. The Sub-contractor shall include for review of the Architect's plans and elevations and shall liaise as necessary with the Architect to assist with the production of these drawings. The Sub-contractor shall ensure that the plans and elevations are co-ordinated with the Ventilation Systems, in terms of such issues as space and access. The Sub-contractor shall provide all services input into the reflected ceiling plans for review to the Architect.

The Fire and Risk Engineer. The Sub-contractor shall follow the recommendations of the Fire and Risk Engineer in the production of the drawings. This shall include a review of the Fire Strategy and other documents when locating fire dampers, smoke dampers and the requirement for fire rated ductwork.

Building Control. The Sub-contractor shall liaise, with and adhere to, the requirements of the Building Control Officer.

Any other member of the Project and Trust teams concerned with the planning and administration of the Ventilation System.

8.0 SYSTEM DESCRIPTION

The mechanical ventilation and air conditioning systems shall comply with HVAC DW144, 154, TR19, BS 5726 (updated), and descriptions and requirements set out below.

8.1 Background to Ventilation and Air Conditioning Installations

The building is largely sealed with limited openable windows in order to control the internal environment within the spaces and limit the impact of odours from the Scottish Water works adjacent to the site.

The Hospital shall be mechanically ventilated:-

- Throughout all internal rooms that have no access to natural ventilation
- Perimeter areas where mechanical ventilation is required for clinical reasons
- Perimeter areas where mechanical ventilation is required for operational and environmental control reasons
- Deep plan perimeter areas where necessary to assist the natural ventilation

The various departments to match their function shall be served by a number of ventilation air handling systems.

In general, each air handling system shall be served by packaged air-handling units containing all components necessary (e.g. fans, coils, filters, etc.) to provide the correct environmental control of those spaces/rooms served.

Active chilled beams and fan coil units shall also be provided for comfort cooling in areas where there is a need for separation or where high heat gains make these a more appropriate choice of systems.

Various types of room are included within this project and are described elsewhere. These are:-

- Wards
- Isolation rooms
- Outpatient type departments
- Operating theatres
- Critical care departments
- Comfort cooled areas (e.g. diagnostic imaging)
- Catering facilities
- Safety cabinet extracts
- Computer rooms and data hub rooms

Carbon Target

The hospitals have a stringent carbon target of 80kg/m^2 per annum and the engineering services have been designed with this strictly in mind. The Sub-contractor shall not deviate from the

proposed designs without consulting with the Contractor and providing evidence on how the deviatation impact on energy usage and hence the carbon target.

Fan Motors

All fan assemblies shall incorporate fan impeller and motors selected to provide the most energy efficient solution conforming to Section 6 regulations and shall be fitted with IE2 efficiency motors to EN 60034-30:2009 as standard, and suitable for operation in ambient temperatures of 40 degrees C.

System Resistance

The carbon target of 80kg/m^2 per annum requires that, for example, system pressure loss is limited to reduce fan power.
The detailed design calculations for fan resistance have been based on assumed pressure drops through in-line components which are stated in the specification or equipment data sheets. The Sub-contractor's selection of components shall ensure that the pressure drop of a component does not exceed that assumed in the calculations. The Sub-contractor shall also take care in finally detailed the ductwork routes to avoid potential causes of high pressure drop that may have a detrimental effect on ultimate fan performance. Upon completion of the Sub-contractor's installation drawings the Sub-contractor shall recalculate the whole system pressure drop, including all components to verify that the design calculated pressure drop has not been exceeded. For the purposes of calculating the system resistances the following allowances have been made in the figures in the equipment schedules:

Grille	25 Pa
Dampers	20 Pa
Heater Battery	20 Pa
Louvre	25 Pa
Plant Room Attenuator	50 Pa
Cross Talk Attenuator	25 Pa
Cowl	50 Pa
HEPA Filter	450 Pa

All rectangular radiused bends: r/w = 0.5
All circular radiused bends: r/d = 1

System performance

The Sub-contractor shall supply and install services and equipment to perform as per specification.

The Sub-contractor shall submit details of all mechanical equipment for comment and place orders in a timely fashion to ensure delivery as per programme.

Where a particular manufacture is specified, the Sub-contractor shall include for that manufacturer.

Where considered appropriate, provide for equivalent standard alternatives to be offered for consideration.

This must be done in a timely manner and the Sub-contractor shall provide all details including but

not limited to:

- Detailed description
- Cost comparison
- Technical comparison
- Thermal comfort comparison
- Carbon emission and energy usage comparison
- References to standards
- References to SHTM/HTMs

Completion

The Sub-contractor shall protect the system from damage or interference during the works.

The Sub-contractor shall test, and clean the system as per TR/19.

The Sub-contractor shall submit O&M and record information via Zutec.

The Sub-contractor's defects and liability period shall be as the contract prelims.

940 OPERATING TOOLS

- Tools: Supply tools for operation, maintenance and cleaning purposes.
  - Quantity: 2 sets.

T51 CLIMATIC CEILINGS AND BEAM SYSTEMS

GENERAL

In clinical spaces and bedroom accommodation local heating and sensible cooling, where required, is to be provided via 4-pipe ceiling mounted enclosed active chilled beams. The devices shall be complete with dedicated controls enabling temperatures to be varied within each treated space.

In circumstances where sensible cooling units cannot meet the heat gains, then fan coil units are to be used.

The controls shall comprise of local room mounted temperature sensor/controller operating 2-port electrically operated valves in response to user inputs to raise or lower the room temperatures. The controls shall incorporate sequencing to avoid simultaneous heating and cooling to minimise energy input.

The emitters shall be provided with their own dedicated chilled water circuit operating at temperatures optimised for the chilled beams whilst minimising the risks associated with condensation within the device.

The active chilled beams shall be installed in series with radiant panels, where required, on the dedicated heating circuit serving the areas with 4-pipe chilled beams.

The Sub-contractor shall allow for supplying samples and constructing mock-ups for comment. This shall include ceiling mock-ups for the chilled beams.

The Sub-contractor shall allow for witness testing the devices, in a mock up single bedroom, in the manufacturer's thermal laboratories to ensure the comfort condition requirements can be achieved. This shall include simulation loads in the space and readings from hot wire anemometers and turbulence probes at pre-determined points within the space.

CFD calculations will not be accepted in isolation as method of proof for meeting the comfort requirements.

The comfort conditions shall be tested, as above, in accordance with BS EN ISO 7730 and shall prove that a category A room can be provided.

All emitters shall have smooth easy clean surfaces with no sharp edges or dirt collecting gaps.

All emitters shall be suitable for hospital application.

Access doors and hatches shall be provided for service and maintenance purposes.

All elements of the work shall be in accordance with the requirements of current legislation, regulations and industry standards.

The installation shall also comply with all relevant Code of Practice and British standards.

210 DESIGN

- System designs to be completed: Active chilled beam systems.
- Testing standards:
  - Capacity: To BS EN 14240.
  - Comfort: To BS EN ISO 7730.
- Proposals: Submit drawings, technical information, calculations and manufacturer's literature.

PRODUCTS

The chilled beams shall be installed as per drawings, specification and manufactures instructions.

The chilled beams shall have low velocity air distribution into the space to prevent draughts and noise.

Beams shall come complete with the manufacturer's connection terminal card, valves, actuator, condensation sensor and terminal box with input and output terminals, *and volume control damper on the primary air inlet*.

310 CLIMATIC BEAMS, ACTIVE

The active chilled beam shall have a galvanised steel case with combined cooling and supply air unit for flush installation within suspended ceiling.

The cooling capacities of the chilled beams shall be controlled by regulating the water flow rate according to the control signal from the room temperature controller.

Heating and chilled water connections shall be provided with 2-port control valves. Local pipework shall also include flexible connections, self-sealing pressure tapings, air vents and drains.

An integral anti-condensation sensor shall be provided on the chilled water flow pipe to close the control valve in the event of the chilled water temperature falling below 15°C.

For more details of the control of the active chilled beams the Sub-contractor shall refer to the relevant BMS controls specification.

The main pipelines of the cooling and heating water circuits should be installed above the beam in order to enable venting of the pipework.

Each beam shall have a measurement tap for static pressure measurement, to enable measurement of the supply airflow rate.

Chilled beams shall be of the enclosed hygienic type, with the beam casing sized to integrate with a standard T shaped grid. The return air grille panel shall be removable from within the treated space with all internal components capable of being cleaned without further dismantling. The performance criteria for the active chilled beams is provided below:

Chilled Beam Reference			CB/W1/L1	CB/W1/L2	CB/W1/L3	CB/W1/L4	CB/W1/L5	CB/W1/L6
Nominal Size			600 x 600	600 x 1200	600 x 1200	600 x 1200	600 x 1200	600 x 1200
Heating	Water LVT HTG F/R	(°C)	60/50	60/50	60/50	60/50	60/50	60/50
	Output (Water Only)	(W)	1000	1480	1000	1480	1570	1570
	Design Water Flowrate F/R	(l/s)	0.024	0.036	0.024	0.036	0.037	0.037
	Maximum Coil ΔP	(kPa)	10	10	10	10	10	10
	Primary Supply Air Temperature	(°C)	16	16	16	16	16	16
	Room Design Temperature	(°C)	22	22	22	22	22	22
Cooling	Water CB CHW F/R	(°C)	15/18	15/18	15/18	15/18	15/18	15/18
	Output (Water Only)	(W)	430	430	780	780	480	900
	Design Water Flowrate F/R	(l/s)	0.034	0.034	0.063	0.063	0.038	0.071
	Maximum Coil ΔP	(kPa)	10	10	10	10	10	10
	Primary Supply Air Temperature	(°C)	18	18	18	18	18	18
	Room Design Temperature	(°C)	26	26	26	26	26	26
Air	Primary Airflow	(l/s)	40	40	40	40	40	40
	Maximum Total Static Pressure	(Pa)	80	80	80	80	100	100

A49618520

The beam casing shall have a stove enamelled finish in white to RAL 9010.

- Type: Enclosed hygienic type.
- Manufacturer: The Sub-contractor is to provide technical submissions for review.
- Flexible connectors: Provide connectors to allow each panel to be lowered for inspection and maintenance.
- Casing:
  - Material: galvanised steel case.
  - Material thickness: Submit proposals.
  - Surface treatment: hygienic with no burrs.
  - Perforations: Standard Manufacturer's plate.

EXECUTION

The Sub-contractor shall ensure all works carried out shall be done is a safe manner and comply with Health and Safety Regulations. This shall include clean and tidy working and working in confined spaces. The Sub-contractor shall protect the chilled beams from damage or interference during the works

620 SETTING OUT

- General: Co-ordinate with ceiling system to maintain the beams and ceiling panels accurately, continuous and even.
- Alignment: Straight and parallel to walls or setting out lines.
- Infill and access units, integrated services: Fit correctly and align.
- Support: Manufacturer's standard. The Sub-contractor shall liaise with the Architect in locating the grilles and diffusers on the architectural reflected ceiling plans as necessary.

630 INSTALLING CLIMATIC BEAMS

- General: Position accurately, parallel to outside wall.
- Alignment: Level in relation to ceiling.
- Mounting: Recessed, Any imperfect Beams scratched or damaged surfaces, or fixing screws having damaged heads or scratched plating, shall be rejected and must be replaced free of charge with satisfactory work before the contract shall be taken over as completed. Beams shall be installed level with the ceiling line and square with adjacent ceiling tiles. Where direct fixing to the ceiling is not inherent to the ceiling layout, the Sub- Contractor shall ensure that adequate concealed supports are provided to ensure that beams are installed at the correct level and square with the surrounding ceiling and adjacent luminaires. All beams shall be supplied in a fully finished condition and shall be provided with protective covering during building operations, and subsequently removed by the Sub-contractor.
- Support: Provide chains to take the weight of the beams when lowered for inspection.

U10 VENTILATION SYSTEMS

ALL AIR SYSTEMS

These shall be low velocity systems with air being distributed throughout the building in galvanised sheet steel ductwork via ceiling voids and riser duct spaces terminating in ceiling or wall diffusers as appropriate.

On full fresh air systems, heat recovery devices shall be provided, to exchange heat between exhausted extract air and incoming fresh air wherever significant energy savings can be achieved.

Generally, temperature control shall be by means of room or duct-mounted sensors which shall operate, via the automatic control system software the control valves on the hot water and chilled water to the heating and cooling coils respectively (refer to BMS specification for further details).

Areas shall be controlled in zones or as individual rooms as necessary to achieve the conditions required by the ADB Sheets.

Space shall be provided in all units for future incorporation of activated carbon filters to control odours entering the ventilating systems. Space shall also be included to upgrade the pre-filter from panel filters to bag filters.

Supply plants shall incorporate panel type coarse pre-filters followed by high efficiency bag filters. Absolute HEPA (high efficiency particulate air) terminal filters shall be provided only for 'ultra clean' areas such as UCV Theatres, Pharmacy Aseptic Suite and as a future allowance for isolation rooms. Some isolation rooms incorporate HEPA filters on the extract system.

Full humidity control, including humidification and dehumidification, shall be provided only in critical air-conditioned clinical areas such as the Pharmacy Aseptic Suite or wherever close control of humidity is required for the successful operation of sensitive equipment, e.g. computers, as advised by the ADB Sheets. Space shall be included within Operating Theatre air handling units for the provision of humidification in the future. Since the anticipated requirement for humidification is limited this shall be provided by electric steam injection humidifiers.

Air pressure regimes for theatre suites shall be designed in accordance with the guidance provided in SHTM 03-1 employing wall mounted pressure stabilisers.

Air volumes have been established by consideration of heat gains or losses and also the air change rate necessary for comfort and safety as appropriate for the activity carried out in each area. Relative air pressures between rooms shall be maintained to suit the activity concerned, by design of the supply and extract air volumes, and use of pressure relief equipment where necessary to prevent cross infection or transfer of unpleasant odours between areas, as required by the ADB sheets.

Heat recovery shall be provided between the supply and extract systems. The hospital ventilation systems shall be in accordance with SHTM 03-01 Ventilation in health care premises, DW 144 and DW 143.

The ventilation system including all AHU's, fan's, diffusers, dampers and grilles shall meet the design noise and vibration criteria.

The ventilation and cooling system shall be zoned with each air handling system being served by packaged air-handling units containing all components necessary (e.g. fans, coils, filters, etc.) to provide the correct environmental control of those spaces/rooms served.

The philosophy of the system is to provide energy efficient operation with areas of the hospital operating on a similar time and clinical nature being served from the same system, and to maintain a sensible level of availability, such that in the event of plant breakdown or maintenance, limited areas of ventilation are lost. Air handling plants shall have availability reinforced by the provision of duplicate motors or fans, which shall automatically changeover to maintain the ventilation requirements.

The Sub-contractor shall take care in finally co-ordinating the ductwork routes to avoid potential causes of high pressure drop that will have a detrimental effect on ultimate fan performance.

All ventilation controls must be capable of being fully interrogated by the building management system through the independent network protocol.

WARDS

The ventilation systems serving ward areas shall provide treated air to internal spaces, clinical spaces and make-up air for sanitary accommodation.

Make up air for en suite WC accommodation shall be introduced directly into the associated bedroom and via active chilled beam units to maintain the required space temperatures.

The beams shall be complete with dedicated controls enabling temperatures to be varied within each treated space. The controls shall comprise local digital room mounted temperature sensor/controller operating 2-port electrically operated valves in response to user inputs to raise or lower the room temperatures.

Air shall be extracted from spaces by either the clean or dirty extract systems as appropriate. Heat recovery shall be provided between the supply and extract systems. The type of recovery system employed shall depend on the area being served. Refer to system drawings and schedules for details.

The ward tower shall use different facades of the building for intake and exhaust air. The podium plantrooms shall use roof turrets for extract air and vertical wall louvres for supply air. This strategy should avoid short circuiting or contamination of the supply air and also meet the BREEAM requirement for separation. The Sub-contractor shall exercise caution when locating any other extracts or gas scavenging exhaust to ensure the supply intakes are not contaminated.

The tower shall be zoned to match the different load profiles with each finger being served by three AHU's. e.g. the external facade with higher solar gains, the central zone and the facade with lower solar gains. Each AHU shall serve four floors in this configuration. The

centre circulation are shall have two zones each served by a different AHU, again each AHU shall serve four floors.

ISOLATION ROOMS

Each lobbied isolation room shall be provided with its own dedicated ventilation system in line with SHBN 04.

Each system ventilation plant shall filter, heat and cool the air and supply it to the room lobby at the required temperature, as dictated by a sensor in the bedroom.

Air shall be transferred to the room via a wall mounted pressure stabiliser and then extracted from the suite via the bedroom and en suite WC, and ducted by fire-clad ductwork to a dedicated extract fan in the plantroom.

Each extract fan unit shall comprise of an isolation damper and a centrifugal cased extract fan, with the motor located out of the air stream, and the exhaust duct shall discharge 3.0 metres above roof level. In the Level 2 plantroom serving the Critical Care Ward it is not possible to achieve a safe discharge height of 3.0 metres above roof level. In this case the extract air shall be HEPA filtered through ‘safe change’ filter units in the plantroom before being discharged to atmosphere with all other ventilation exhausts.

Due to the small size of the plants, heat recovery is not considered viable and shall therefore not be provided.

Isolations rooms supply air terminals shall be capable of having terminal HEPA filters fitted at some future date. The air handling unit fan shall be capable of overcoming the additional resistance imposed by the HEPA filter by a simple speed change on the motor inverter.

OUTPATIENT TYPE DEPARTMENTS

The ventilation systems serving outpatient areas shall provide heated air to internal spaces, clinical spaces and make-up air for sanitary accommodation.

Active chilled beams shall generally be provided to individual spaces to provide independent control of heating and cooling requirements.

Air shall be extracted by clean and dirty extract systems.

Heat recovery shall be provided between the supply and extract systems.

OPERATING THEATRES

Each operating theatre shall be provided with a dedicated ventilation system.

Each system ventilation plant shall filter, heat and cool the air and supply it to the suite of rooms, and arranged to allow individual temperature set point adjustment and indicated on the associated surgeon's theatre panel (refer to BMS specification).

The pressure regimes between the spaces in each theatre suite shall be maintained by a combination of supply and extract rates to each space, and pressure stabilisers located in the walls.

Heat recovery shall be provided between the supply and extract systems. Out of hours setback shall be provided by reducing the air volumes and temperature set points.

In theatres with a requirement for Ultra Clean Ventilation (UCV), a specialist shall be employed to undertake the provision of the UCV canopy in accordance with SHTM 03-1.

Ancillary areas associated with the Operating Theatre department shall be served from a dedicated plant.

CRITICAL CARE DEPARTMENTS

Critical care departments such as ITU/HDU shall be provided with dedicated ventilation systems.

The supply air ventilation plant shall heat and cool the air as required by the control system to provide the correct condition in the various rooms/zones.

Final temperature control to the spaces shall be achieved by terminal reheaters controlled from user adjustable sensors within each space. Heater batteries shall be located wherever possible in plant areas, but where heaters can only be provided in the ceiling void of the occupied space they shall be located away from patient occupied spaces, i.e. bed spaces.

Heat recovery shall be provided between the supply and extract systems.

COMFORT COOLED AREAS

Departments where space temperature control is required, such as the Emergency Centre, Diagnostic Imaging, etc. cooling shall be provided by treated air to clinical spaces and spaces with high equipment gains.

The department shall be arranged in a number of zones to suit the control requirements, varying heat gains and use of the spaces.

Particular areas that have high-density heat gains shall be provided with terminal cooling in the form of fan coil units to achieve the required space conditions.

The supply air ventilation plant shall heat or cool the air as required by the control system to provide the correct condition in the various rooms/zones.

All AHU's and fans shall be suitable for hospital application refer to drawings and schedules for further details.

SAFETY CABINET EXTRACT SYSTEMS

The Pharmacy shall be served by separate extract systems serving the general areas whilst extracts from safety cabinets shall be handled by individual contaminated extract systems.

The design of the general extract system shall be co-ordinated with the associated supply system and contaminated extracts to maintain suitable pressure levels and ensure the Clean Room requirements of the Aseptic Suite are maintained.

The Aseptic suite is a "clean space" and as such shall be installed and commissioned as

per SHTM 03-01 AND HBN 14-01. equipment shall be fully commissioned to validate their function and achievement of performance.

QUENCH PIPES

The Quench pipes serving the MRI machines shall be installed by the sub-contractor in accordance with a design and specification produced by the MRI supplier/installer. The route of the pipes shall be as shown on the drawings and they shall be insulated and terminate in accordance with the recommendations given by the MRI supplier/installer. The Quench pipes are required to be continuous and therefore the pipe structure and insulation shall maintain the required 2 hour fire integrity.

130 MECHANICAL SUPPLY VENTILATION SYSTEM

Supply air from central air handling plant shall be delivered through the ductwork systems to the areas served, and discharged via ceiling mounted diffusers.

Supply and extract air handling plants shall be of a packaged construction with a double skin casing complete with thermal/acoustic insulation material between the two skins. Units shall house filters, coils, fans and motorised inlet dampers, etc. Heat recovery devices and humidifiers shall also be incorporated where required. External fan motors shall be provided to all units with some unit types having twin motors.

All AHU's and fans shall be suitable for hospital application. Refer to drawings and schedules for further details.

- Location of plant: Various locations throughout the building.
- Type of system: Multizone, constant volume.
- External air intake terminals: Architectural louvres.
- Air filters: In air handling units, as section U81.
  - Accessories: As schedule.
- Heat recovery: In air handling units, as section U81/U85.
- Air handling units: As section U81and schedules.
  - Fabrication: Construction, as section U81.
- Supply fans: As schedule.
- Acoustic treatment: Rectangular silencer, as section U87.
- Air ductwork and ancillaries: Ductwork, Fire rated and smoke extract ductwork and fittings, as section U80.
  - Accessories: Dampers, fire and smoke, metal ductwork, as section U80.
- Thermal insulation on supply air ductwork: As section Y30.
- Vibration isolation mountings: Spring isolators, as section Y31.
- Reheat batteries: As schedules and drawings.
- Room supply air terminal devices: Chilled beams, grilles and diffusers as specified.
- Controls: All ventilation controls must be capable of being fully interrogated by the building management system through the independent network protocol.
- Completion:

  - Identification of ductwork and equipment: As section Y32.
  - Testing and commissioning:
  - Ductwork pressure testing, as section U80;
  - Air distribution system commissioning, as section Y50; and
  - Performance testing, as section Y50.

140 MECHANICAL EXTRACT VENTILATION SYSTEM

Extract air from the area concerned shall be drawn through a ductwork system to extract fans in the roof plantrooms for discharge to atmosphere, or returned to the air handling plant for recirculation.

- Room extract air terminal devices: As drawings.
- Air ductwork and ancillaries: Fire rated and smoke extract ductwork and fittings, as section U80 and Smoke extract ductwork, as section U80:
  - Accessories: Dampers, fire and smoke, metal ductwork, as section U80 and Flexible ductwork, as section U80.
- Thermal insulation on extract air ductwork: As specified.
- Vibration isolation mountings: Spring isolators, as section Y31.
- Heat recovery: Plate recuperator, as section U85 or thermal wheel, as section U85 depending on AHU type.
- Acoustic treatment: Rectangular silencer, as section U87.
- Extract fans: The extract fan shall have twin motors depending of fan type.
- External exhaust air terminals: Architectural louvres
- Controls: All ventilation controls must be capable of being fully interrogated by the building management system through the independent network protocol.
- Completion:

  - Identification of ductwork and equipment: As section Y32.
  - Testing and commissioning:
  - Ductwork pressure testing, as section U80;
  - Air distribution system commissioning, as section Y50; and
  - Performance testing, as section Y50.

150 TOILET EXTRACT VENTILATION SYSTEM

Potentially contaminated dirty air extract systems shall be discharged at, or above, roof level.

Dirty extract shall be provided to extract air from toilets, bathrooms, cleaners' rooms and dirty utility areas. Extract plants shall either form part of the general area air handling unit of be separate extract fan units.

Air shall be extracted via grilles in the individual rooms and ducted by galvanised sheet steel ductwork similar to that provided for the general supply and extract systems to extract fans in the plantrooms. Make up air shall be via the main ventilation system.

Separate dirty extract units shall be manufactured heavy gauge aluzinc corrosion resistant steel. The general construction is to Class A leakage.

The fan unit shall be supplied complete with all manufacture control accessories to be fully integrated into the BMS.

The fan unit shall be provided with an integrated commissioning/speed control to accurately commission the system. The commissioning set up facility directly controls the integrated speed control/frequency inverter.

Heat recovery shall be used for the larger dirty extract systems.

Where toilets or bathrooms are in isolated positions, not convenient to central ducted systems, small units operated by light switch control shall be used

- Room extract air terminal devices: Air transfer grilles and diffusers, as specification.
- Air ductwork and ancillaries: Sheet metal ductwork and fittings, circular, as section U80 and Sheet metal ductwork and fittings, rectangular, as section U80:
  - Accessories: Dampers, fire and smoke, metal ductwork, as section U80 and Flexible ductwork, as section U80.
- Thermal insulation on extract air ductwork: Not required
- Vibration isolation mountings: Spring isolators, as section Y31.
- Acoustic treatment: Circular silencer, as section U87 and Rectangular silencer, as section U87.
- Extract fans: Twin Toilet extract fans run and standby, as section U82.
- External exhaust air terminals: Architectural louvres.
- Controls: All ventilation controls must be capable of being fully interrogated by the building management system through the independent network protocol.
- Completion:

  - Identification of ductwork and equipment: As section Y32.
  - Testing and commissioning:
  - Ductwork pressure testing, *as section U80;*
  - Air distribution system commissioning, as section Y50; and
  - Performance testing, as section Y50.

160 KITCHEN EXTRACT VENTILATION SYSTEM

Ventilation to the central catering areas shall be provided to deal with the requirements on the cooking equipment to reduce odours and limit temperatures within the space.

Contaminated air extract systems shall be discharged at, or above, the tower roof level at high velocity as appropriate.

Ventilation make-up air shall be provided to balance the extracted air.

There shall no recovery from kitchen hood extract due to the difficulties with grease laden air.

The kitchen canopies shall be supplied and installed by the kitchen specialist and do not form part of these works. The Sub-contractor shall liaise with the kitchen specialist, so as to agree requirements. All the main kitchen extract hoods to be the capture/entrainment type. This type of canopy entrains the contaminant air by supplying fresh air over the kitchen island. This shall reduce extract air flow rates and hence save energy. The hoods and supply air shall also have a set back position when the kitchen is not in use. This shall reduce air flows when the kitchen is not in use and energy consumption

- Air ductwork and ancillaries: Fire rated and smoke extract ductwork and fittings, as section U80. All kitchen extract systems to DW172:
  - Accessories: All kitchen hood extract ductwork to be fire rated.
- Thermal insulation on extract air ductwork: Not required.
- Vibration isolation mountings: Spring isolators, as section Y31.
- Acoustic treatment: Sub-contractor's specialist to examine.
- Extract fans: Centrifugal belt driven, as section U82.

- Completion:

  - Identification of ductwork and equipment: As section Y32.
  - Testing and commissioning:
  - Ductwork pressure testing, as section U80;
  - Air distribution system commissioning, as section Y50; and
  - Performance testing, as section Y50.

EXECUTION

The Sub-contractor shall ensure all works shall be done is a safe manner and comply with Health and Safety Regulations. This shall include clean and tidy working and working in confined spaces.

All supply and extract ventilation systems should be clearly labelled. The label should identify both the AHU and the area that it serves. The lettering should be at least 50 mm high and be mounted in an easily visible place near the fan of the unit. Any sub-systems and the principal branch ducts should be similarly labelled. The direction of air flow should be clearly marked on all main and branch ducts.

630 INSTALLING DUCTWORK ON AIR HANDLING UNITS

- Air discharge: Connect ductwork to allow air to straighten as it leaves the air handling unit.

U41 FAN COIL UNITS

310 FAN COIL UNITS

Fan coil units shall be complete with dedicated controls enabling temperatures to be varied within each treated space. The units shall, where applicable, include heating. The controls shall comprise local room mounted temperature sensor/controller operating 2-port electrically operated valves in response to user inputs to raise or lower the room temperatures.

All Fan coil unit motors shall be fitted with built in Thermal overload protection.

- Performance: To BS 4856.
- Manufacturer: Sub-contractor's choice
  - Product reference: Sub-contractor to provide technical proposals.
- The Sub-contractor shall examine all layout drawings, schematics and schedules, in order to ascertain duties and required temperatures.
- Fan speed: Low.
- Fan motors: EC type with a Specific Fan Power less than 0.8 watts per litre/second
- Noise levels: As fan coil schedule.
- Electrical supply type: As fan coil schedule.
- Casings: As manufacturer's standard for application.
- Mounting: As manufacturer's standard for application.
- Finish: As manufacturer's standard for application.
- Ductwork connections: Sub-contractor to provide proposals.
- Access: Provide access to filter, fan and motor, valves and controls.
- Drip tray:
  - Position: Under coil, and under control valve where fitted.
  - Material: Corrosion resistant.
  - Condensation: Insulate external faces to prevent.
- Controls: All ventilation controls must be capable of being fully interrogated by the building management system through the independent network protocol.
- Accessories: As Fan coil schedule.

EXECUTION

The Sub-contractor shall ensure all works carried out shall be done is a safe manner and comply with Health and Safety Regulations. This shall include clean and tidy working and working in confined spaces.

610 FAN COIL UNIT DRAIN LINE

- Drain connections: Connect drain line flush with bottom of drip tray.
- Drain line: To discharge via a suitable dry type trap.

U60 LOCAL *AND ROOM* AIR CONDITIONING SYSTEMS

GENERAL

Generally ventilation and comfort cooling shall be from central systems. Where this is not possible because of the remoteness of the area from the main plant, the particular use of the space, or high cooling loads, local systems shall be used. The Sub-contractor shall ensure that these systems are installed to the same high standard as the main system.

PRODUCTS

All elements of the work shall be in accordance with the requirements of current legislation, regulations and industry standards. The installation shall also comply with relevant British Standards. The Sub-contractor shall provide working drawings for the installation and issue them for comment before work commences.

340 LOCAL AND ROOM AIR CONDITIONING UNITS

All local air-conditioning systems shall be feed from the main chilled water system. Computer rooms shall each be provided with independent systems in accordance with specification on Computer room Cooling reference ZBP-XX-XX-SP-523-308.

Data hub rooms shall be provided with cooling by means of fan coil units and the rooms shall be provided with ventilation air to achieve a positive pressure.

The fan coil units must be capable of being fully interrogated by the building management system through the independent network protocol.

To comply with these directives appropriate national & harmonised standards have been applied. These are listed on the Declaration of Conformity, supplied with each product.

Unit cabinets shall be manufactured from galvanised sheet steel coated with epoxy baked powder paint to provide a durable finish. Internal strength and rigidity shall be provided by a welded space frame constructed of channel profile folded steel. Cabinets shall be lined internally with fire resistant 20mm foam (UL94 V0) for thermal and acoustic insulation. Cabinets shall meet the Hospital acoustic and vibration requirements. The cabinet doors are full height, hinged and key lock secured. Door arrangement shall allow flexible door opening/removal for improved access. Doors shall have rubberised door seals reduce sound breakout and eradicate leakage.

The units shall have large surface area coil(s) to optimise airflow and heat transfer, manufactured from refrigeration quality copper tubes with mechanically bonded aluminium fins.

Fins shall be coated with a non-stick acrylic film to provide additional corrosion protection and efficient surface water removal for improved performance.

Coil headers shall be circuited to ensure low water pressure drops. The cooling coils shall be mounted over a full width stainless steel condensate tray. Chilled water flow shall be via a factory fitted 2 port control valve.

A low pressure hot water coil constructed of refrigeration quality copper tube and mechanically bonded aluminium fins shall be factory fitted. Proportional heating control shall be provided by a factory fitted *2* port control valve.

All coils shall be Factory pressure tested to 20Bar.

Fans shall be backward curved impellers, direct drive centrifugal fan assemblies with integral rotor mounted motor which is statically and dynamically balanced for quiet operation. Designed for high corrosion resistance, the impellers are laser welded aluminium with galvanised rotor and die cast aluminium EC power module. An inbuilt EC fan control module shall allow the fan to modulate from 15-100%.

Filters shall be 97mm pleated disposable panel filters in a rigid frame. Conform to BS EN 779-G4.

Access and removal from unit front. An adjustable diaphragm pressure switch fitted across the filter assembly shall monitor pressure drop which shall initiate a filter dirty alarm.

The control panel shall have fan motor contactors and overloads, compressor starter, contactors, transformer, sub circuit protection, volt free contacts, mains and inter-connecting terminals. The panel shall be fitted within the cabinet and be hinged for easy access to other components within the unit. The electrical control panels shall be wired to the latest European standards and codes of practice.

To ensure complete unit isolation of the electrical panel during adjustment and maintenance a door interlocking isolator is provided as standard.

Units shall be fitted with the microprocessor controller which shall have a real time clock and a communication port plus networking and BMS connections. A backlit LCD door mounted display keypad assembly shall be fitted to view the unit status and allow operator adjustment.

The condensate pump shall have a reservoir with a capacity of 5 l/m at a head of 10.8m.

Leak detection tape suitable for sensing water droplets shall be supplied loose for remote mounting on site.

- Sub-contractor to provide technical proposals.
- Arrangement: Vertical.
- Casing: Steel frame with acoustically lined steel panels.
- Finish: Manufacturer's standard.
  - Colour: Manufacturer's standard.
- Direction of airflow: *As schedule*
- Controls: All controls must be capable of being fully interrogated by the building management system through the independent network protocol.

EXECUTION

The Sub-contractor shall ensure all works carried out shall be done is a safe manner and comply with Health and Safety Regulations. This shall include clean and tidy working and working in confined spaces.

U80 AIR DUCTWORK AND ANCILLARIES

During installation the ductwork shall be installed to a PDI (Protection, Delivery & Installation) as defined in the HVCA (2005) TR/19 – Guide to good practice: internal cleanliness of ventilation systems'.

A Specialist Cleaning Operation shall be performed on all ductwork systems installed serving Clinical Areas, in accordance with the guidelines of Section 9 – Verification of Cleanliness, HVCA TR/19.

The cleanliness of the ductwork installation shall be confirmed and documented by means of the post clean verification test procedure outlined in Section 9.5 of HVCA (2005 TR/19).

300 CLASSIFICATION

Ductwork shall be classified as described in Table 1 of DW/144, as follows:-

- Plantroom and main riser ductwork: Class B
- Distribution ductwork at each floor Class: A

The ductwork sub-contractor shall clearly indicate on the manufacturing and installation drawings the classification of the ductwork proposed.

All ductwork shall meet the leakage criteria given in the Building Regulations Section 6 which requires it to meet the requirements of HVCA DW/143.

10%, chosen at random, of Class B ductwork shall be selected by the Contractor for testing.

Ductwork branch connections shall be shoe type as fig 106 in DW144, spigot type branches shall not be acceptable.

The Sub-contractor shall ensure that sufficient dampers are provided to regulate and balance the system. Dampers on grilles or diffusers shall be used only for balancing of external air distribution devices in a common branch. All dampers shall be sufficiently rigid to prevent vibration within the systems, when absorbing the additional available pressure of the system.

PRODUCTS

A specialist ductwork Sub-contractor shall be employed by the Sub-contractor to fabricate install and test a range of ductwork that shall be used for general ventilation, air conditioning or comfort cooling.

305 DAMPERS, FIRE AND SMOKE, METAL DUCTWORK

The ductwork system shall be provided with fire dampers in locations corresponding to the appropriate fire separation barriers. Actuation of the dampers shall be in accordance with SHTM81 Fire Code, and the Fire Consultants Strategy Report, subject to the separation performance of the barrier.

Where actuation of the damper is via the fire alarm system the damper shall be motorised to facilitate re-opening after testing of the fire alarm system. Dampers utilising fusible link operation only shall be provided with local mechanical indicator on the side of the fire damper. Dampers with motorised operation shall be monitored via a separate electronic remote monitoring system.

Fire dampers MUST be fitted with the correct installation frame and supports.

Fire rated ductwork shall be utilised where the use of fire dampers is inappropriate.

The smoke damper control panel must be capable of being fully interrogated by the building management system through the independent network protocol.

Smoke control dampers shall be provided in the positions as indicated on the drawings and shall be suitable for mounting in the horizontal or vertical plane. They shall be certified by the manufacturer to have been tested to the temperature time curve of BS ISO 10294, for a period of 4 hours with a classification of ES 240 in the fully closed position with power off.

Smoke control dampers shall have factory fitted installation frames to HVCA 10.1.83 specification and the sub-contractor shall allow for all additional framing, supports and bracing securing the damper to the structures, to the satisfaction of the Building Control Officer.

All smoke control dampers shall be supplied with a factory fitted actuator, complete with integral micro switches and controlled mechanical fail safe operation of not more than 20 seconds.

The totally enclosed precise movement with British Standard 5588: Part 9999: 1999 should be held in the open position by means of a thermally actuated device set to operate at approximately 74 ℃. Automatic smoke and fire control dampers are fire rated dampers as they are held in the reset (Open) position by a thermally actuated device.

The totally enclosed precise movement opposed blade drive shall be positioned out of airstream for protection against damage, be hard wearing and free running.

The control mode/damper connection shall be by means of the drive interface mechanism, which shall be totally independent of the ductwork.

Automatic smoke release dampers with their appropriate control modes shall have spring fail-safe open operation.

The Sub-contractor shall be responsible for allocating a unique reference number to each damper per system and produce a schedule for the purposes of carrying out the inspection and testing of all installed smoke/fire dampers. Upon completion of the tests, the certificates, with the schedule must be issued confirming that all dampers have been inspected and function correctly in accordance with the manufacturer's data sheets. The ductwork Sub-contractor is to allow for subsequent demonstration of all fire/smoke dampers to a witnessing party. Access door requirements as DW144 Appendix M require unique numbers to be identified on the fire damper and also on installation / record drawings, damper control graphics and within a schedule to be included in the O& M instructions.

The Sub-contractor shall be responsible for ensuring the mechanical inspection and testing of all smoke/fire dampers installed on the contract is carried out with the smoke damper control specialist testing and in attendance same time. Upon completion of the tests, the certificates must be issued for confirming that all the dampers have been inspected and that they function correctly in accordance with the manufacturer's data sheets.

The dampers shall comply to Class A and B of Eurovent Document 2/2 and Test Procedures for Classes A, B and C of HVCA Ductwork Specification DW144.

305A DAMPERS, FIRE AND SMOKE, METAL DUCTWORK

The slam shut curtain fire dampers shall have a stainless steel folding curtain having unbroken movable joints, stainless steel constant tension closure springs for positive closure and stainless steel peripheral gasketing.

The self resettable, latching removable release mechanism cassette, shall ensure the closure of the stainless steel curtain under full fire conditions. The housing shall be galvanised steel fully welded spigotted type casing suitable for square, rectangular, circular or flat oval connections.

The spigotted casing with continuously welded corners and spigot connections makes these dampers suitable for inclusion into air distribution systems to the test methods of Eurovent Class A, B & C and HVCA Ductwork specification DW144.

- Standard: To BS EN 1366-2.
- Type: Multi-blade.
- Manufacturer: Sub-contractor to submit proposals.
  - Product reference: Sub-contractor to submit proposals.
- Material: Stainless steel.
- Accessories: External visual indication of fire damper blade position.
- Fusible links fusing temperature: 72°C.

310 DAMPERS, NON-RETURN

Non return dampers shall be installed as shown on the drawings. They shall automatically shut of individual sections of an air conditioning system.

The damper shall be selected for the type of system (constant or variable volume).

- Standard: To BS EN 1751.
- Manufacturer: Sub-contractor to submit proposals.
  - Product reference: Sub-contractor to submit proposals.
- Leakage through closed blades: Class 0.
- Casing leakage: Sub-contractor to submit proposals.
- Pressure: Sub-contractor to submit proposals.
- Material: Galvanized sheet steel frame and aluminium blades.

330 DAMPERS, SHUT OFF

Shut of dampers shall be suitable for air conditioning and ventilation systems requiring air control and low closed blade leakage characteristics. For standard low/medium pressure and velocity systems.

Air control and system balancing shut-off dampers shall comprising of stainless steel aerodynamic blades with synthetic trailing edge blade seals, synthetic blade end bearings and stainless steel top and side spring tempered flexible gasketing. Dampers to have a maximum closed blade leakage of 27 l/s at 1000 Pa when measured on a 1000mm wide x 1000mm high damper. Housed in a galvanised mild steel frame having integral peripheral flanges.

- Standard: To BS EN 1751.
- Manufacturer: Sub-contractor to submit proposals.
  - Product reference: Sub-contractor to submit proposals.
- Leakage through closed blades: Sub-contractor to submit proposals.
- Casing leakage: Sub-contractor to submit proposals.
- Pressure: Sub-contractor to submit proposals.
- Setting: Sub-contractor to submit proposals.
- Material: Galvanized sheet steel.
- Control method: Electric and electronic.

340 FLEXIBLE DUCTWORK

Flexible ductwork shall not be used in runs that are more than 1.0m. Fixed ductwork shall terminate not less than 450mm from terminal equipment. Actual lengths of flexible ductwork when fully extended shall not exceed 125% of the connection distance.

Where the flexible ductwork is to be insulated, this shall be factory applied of a type approved for the application and to the thermal conductivity equivalent to the adjacent thermal insulation, and shall be Class O fire rated.

- Standard: To HVCA DW/144.
- Manufacturer: Sub-contractor to submit proposals.
  - Product reference: Sub-contractor to submit proposals.
- Material: As specification U10.

370 PRESSURE STABILISERS

Pressure control flaps/pressure stabilisers are to be installed as shown on drawings. The flap/stabiliser shall accurately control the differential air pressure between adjacent rooms, and the blades close fully as soon as the pressure differential drops below the required level. This diverts the airflow to pass through an open door forcing back airborne contamination.

The damper shall come with a Standard Finish: RAL9010 powder coated white with antimicrobial protection as standard.

Bearings shall be stainless steel ball roller type sealed for life ball bearings. Pressure Control Range shall be 3 - 50 Pa with a setting accuracy of +/- 1 Pa. Where required the

flap/pressure stabilisers shall come complete with fire/fire smoke damper.

The fire/smoke damper shall be standard smoke/fire damper integrity tested to BS EN 1366 for 245 minutes - ES classification (ES245).The fire/smoke damper shall be enclose in a case with the flap/stabiliser as one unit and the entire case shall be powder coated white with antimicrobial protection as standard. The fire damper must be compatible and be capable of being controlled by the fire damper control panel/system.

- Manufacturer: Sub-contractor to submit proposals.
  - Product reference: Sub-contractor to submit proposals.
- Material: Stainless steel flap and adjustable balance weight assembly.
- Wall mounting casings material: Sub-contractor to submit proposals.
- Control pressure of balance weight: Sub-contractor to submit proposals.

380 ACCESS DOORS

An access panel shall be provided adjacent to all items of in-line equipment that require either regular servicing or intermittent access.

Access doors shall not generally be less than 450 mm long by the full width of the duct on sizes up to 450 mm wide. For ductwork sizes up to 600 mm wide, access door shall not be less than 450 mm x 450mm clear opening. Ductwork sizes for 600 mm-900 mm shall have not less than 600 mm x 450 mm access doors. For ducts with longest dimensions below 300 mm Level 2 access doors DW/144 Table 25 shall apply. For ductwork with sides longer than 900mm access door sizes shall be agreed with the Sub-contractor. Where man access into ductwork is possible then the supports and fixing shall be suitable to support the weight of an occupant and tools. Access doors shall be installed adjacent to all coils and batteries for inspection and cleaning.

Access and inspection opening locations shall be in accordance with Part 7 of DW/144 and suitable to comply with the requirements of TR/19 with the exception of above and the following.

All doors shall be fitted with rust-resistant quick release fasteners and those in the riser shafts shall be supplied with an approved retaining device fixed to door and frame. Access doors shall be capable of withstanding the respective system test pressures referred to in Table 1 of DW/144.

All access doors are to be pre-insulated and shall be constructed and installed in such a manner that the internal face of the duct and door is maintained when fixed. On insulated services all access doors shall be fitted with raised stools which shall be equal to the depth of the insulation. For tender purposes assume insulation thickness of 38 mm. All insulation finishes shall be extended to the neck size of the access door with the access doorframe returns exposed on the surface of the insulation finish.

Ductwork test holes shall be required to be drilled in the locations recommended in SHTM 2025/03-01 (Commissioning) and identified by the commissioning engineer. Test holes shall be drilled and located in accordance with the requirements of BSRIA Application Guide 3/89 Section C3.2 at the positions confirmed by in situ marking or marked up ductwork drawings. Each test hole to be sealed with a top hat grommet. Locations shall not be limited to those described.

Access doors, panels and covers other than those regarded as standard practice (see

DW/144) shall be marked on the manufacturers drawings issued for comment or noted below or in other sections of this specification, including type to be used.

Details of large access openings shall be agreed and shall be:-

Fitted in readily accessible locations and suitable for the purpose.

Provided to the sizes, requirements and positions recommended in DW/144 and this specification and on the drawings, utilising suitable proprietary products, which meet the relevant pressure classifications. Provided adjacent to duct mounted filters, cooling coils, fans, heating coils, humidifiers, and all dampers including hand fire and smoke dampers to facilitate easy cleaning and maintenance.

For air-conditioning (A.C) systems access doors provided for Level 3 access and for other ventilation systems Level 2 access is provided all as indicated on DW/144 Table 25.

Access doors shall be sealed, to ensure an airtight seal with a soft EDPM full-face gasket secured to the ductwork with an approved adhesive. Fire rated to match the standard of ductwork in which they are installed. Insulated in all thermally insulated ductwork to match the insulation value of the associated lagging and maintain the vapour barrier.

FABRICATION

Ductwork used for general ventilation system (including air-conditioning and comfort cooling) shall be manufactured from sheet steel and may be rectangular, circular or flat oval as indicated on the scheme design drawings. Ductwork constructed from an alternative material shall be agreed with the Contractor and clearly indicated on the scheme drawings. Ductwork, shall generally be constructed from zinc coated Steel as described in DW/144.

The specialist ductwork Sub-contractor shall be responsible for:-

Reviewing associated Architects and Structural Engineers drawings to confirm routes, availability of supports etc. Site measuring built structures to confirm suitability of routes, co-ordination (with the structure).

Provision of manufacturing/installation and builderswork drawings associated with the ductwork system.

Provision of support details and proposed locations. This shall be via manufacturing drawings and mark-ups on Architectural/Structural engineers' scheme drawings.

Co-ordination and installation of all ductwork components not directly supplied by the ductwork Sub-contractor.

Manufacture and supply of all ductwork, and associated components. Installation, air leakage testing, and component operation testing of the ductwork systems and their associated equipment. Preparation of as-fitted ductwork drawings - issued as electronic copy and hard copy at a scale of 1:50 or 1:25.

All the forgoing responsibilities shall be co-ordinated and integrated within the agreed programme of installation.

520 FIRE RATED AND SMOKE EXTRACT DUCTWORK AND FITTINGS

Where indicated on the scheme drawings or where passing through fire rated rooms/enclosures, ductwork shall be of fire rated construction equal to the room/enclosure through which it passes, in accordance with the Fire Consultant's Strategy Report and NHS Fire Code SHTM 81. The Sub-contractor shall review the fire strategy and architects drawings.

The location of the fire enclosing structures and their value (in hours) are indicated on the Architects drawings.

The ductwork shall be constructed as a complete system to provide the rated protection for stability, integrity and insulation when tested in accordance with SHTM 81 and BS. Any components within the system shall maintain the overall integrity in accordance with the test procedures.

Where ductwork services penetrate fire rated walls and cavity barriers, the penetrations shall be sealed after installation by the main contractor using a proprietary fire sleeve/sealant as manufactured by specialists.

The ductwork systems shall be fire stopped where appropriate. Where plastic ductwork is specified the ductwork Sub-contractor shall supply and fit to ductwork intumescent sleeves for the main contractor to finish too.

The ductwork shall be constructed as a complete system to provide the rated protection for stability, integrity and insulation when tested in accordance with BS476 Part 24. Any components within the system shall maintain the overall integrity in accordance with the test procedures.

All fire rated ductwork shall be constructed and installed by a specialist supplier who shall certificate the complete system to the approval of the Local Authority Building Control Officer.

The standard of fire stopping shall give greater or equal fire resistance as the construction through which the service penetrates. Where sheet steel or rolled steel section sealing flanges are required the ductwork Sub-contractor shall provide them.

Cleanliness and leak tests shall be as main ductwork section.

- Standard: To HVCA DW/144.
- Fire resistance to BS 476-24: As this specification.
  - Stability: To meet room requirements.
  - Integrity: To meet room requirements.
  - Insulation: To meet room requirements.
- Accessories:
  - Materials: Compatible with ductwork.
  - Finish: Match ductwork.

530 PLASTICS DUCTWORK AND FITTINGS, CIRCULAR (No plastic ductwork shall be used without prior written agreement of the Contractor)

- Standard: To HVCA DW/154.

- Environmental conditions for plastics ductwork: As drawings.
- Material: As drawings.
- Regulating dampers: As drawings.
- Flexible joint connections: Fit on fan inlets and outlets and at building expansion joints.
- Hangers and supports
  - Strength requirements: To BS EN 12236.
- Access openings: As required.

550 SHEET METAL DUCTWORK AND FITTINGS, CIRCULAR

Standard components shall be used wherever practical. Circular ductwork supports shall be as Figures 65 (drop rod studding only) or 66(DW/144).

- Standards: To HVCA DW/144, BS EN 1506 and BS EN 12237.
- Air leakage testing: As classification requirement.
- Special installations: Not applicable.
- Material: Suitable for system and as drawings.
- Construction: Spirally wound.
- Regulating dampers:
  - Balancing type: Suitable for system and as drawings.
  - Operation: Suitable for system.
  - Material: Suitable for system.
- Flexible joint connections: Fit on fan inlets and outlets and at building expansion joints.
- Hangers and supports
  - Strength requirements: To BS EN 12236.
- Access openings:
  - Function:
  - Inspection;
  - Cleaning; and
  - Maintenance.
  - Sizes: As DW 144 and Part U10.

560 SHEET METAL DUCTWORK AND FITTINGS, RECTANGULAR

Any duct with an aspect ratio greater than 4:1 shall be supplied with a central splitter. For all slide-on flange systems (Mezz or similar) with bolted corners, joints on all systems to be further secured with intermediary fastenings to the Manufacturer's recommendations. Only full girth stiffeners shall be used. Dimpling, self-tapping screws and piercing screws shall not be used as fasteners on ductwork. Turning vanes shall be double skinned as (DW/144) and attached to ductwork using guide rails as indicated in DW/144. Access doors are required in accordance with HVCA guide TR/19 Tables 2 and 3.

The ductwork Sub-contractor may use radius bends as Figure 29 (DW/144) as an alternative, enabling turning vanes to be omitted.

- Standards: To HVCA DW/144 and BS EN 1505.
- Air leakage testing: As classification requirement.
- Special installations: Not applicable.
- Material: Suitable for system and as drawing.
- Regulating dampers:
  - Balancing type: Suitable for system and as drawing.
  - Operation: Suitable for system.

- Material: Suitable for system.

- Flexible joint connections: Fit on fan inlets and outlets and at building expansion joints.
- Hangers and supports
  - Strength requirements: To BS EN 12236.
- Access openings:
  - Function:
  - Inspection;
  - Cleaning; and
  - Maintenance.
  - Sizes: As DW 144 and Part U10.

EXECUTION

The Sub-contractor shall ensure all works carried out shall be done is a safe manner and comply with Health and Safety Regulations. This shall include clean and tidy working and working in confined spaces.

610 GENERAL

- Cut edges on ductwork, flanges and supports: Smooth and burr free.

630 INSTALLATION OF PLASTICS DUCTWORK

- Standard: To HVCA DW/154.
  - Other requirements: Generally no plastic ductwork shall be used.
- Installing flexible joint connections: Minimize pressure drop.

640 INSTALLATION OF SHEET METAL DUCTWORK

- Standard: To HVCA DW/144.
  - Other requirements: Hangers and supports shall be generally as Table 15 of DW/144 or with manufacturer's proprietary devices with the following qualifications.
- Installing flexible joint connections: Minimize pressure drop.

650 SUPPORT OF AIR TERMINALS UNITS IN CEILING GRIDS

- Standard: To HVCA DW/144.
- Special supports: Supply and extract grille/ diffuser supports shall be as manufacturers detail.
- Position: The Sub-contractor is responsible for the co-ordination of the reflected ceiling layout.

670 DUCTWORK SUPPORT FOR VAPOUR SEAL CONTINUITY

- Method of support:

The horizontal bearers shall be steel profiled section such as Uni-strut or similar proprietary support system. The horizontal bearers shall have a galvanised finish, and plastic end-caps. A medium density Class O rubber or EDPM gasket shall be provided between the ductwork and the support bearer horizontal surface. The gasket shall not fully deform under load. The ductwork Sub-contractor shall calculate the support system

selected. Horizontal supports shall not be used as secondary supports for additional services without prior approval. Calculations shall include the additional loads imposed by the agreed additional services. Multi-tier ductwork runs shall all be supported on individual horizontal bearers with single length common support rods sized for the combined load of all ducts being supported. Multiple section drop rods shall not be accepted. Insulated ducts with vapour sealing shall be provided with a timber or composite material isolating member between ductwork and the support bearer, either horizontally (rectangular ductwork) or circumferential (circular/flat oval ductwork).

The isolating member shall be the full depth of the insulation and shall have the insulation finish/vapour seal and where applicable encasement extended without a break at least 1 duct width or diameter either side of the support channel. The isolation rubber gasket shall also be included. The ductwork Sub-contractor shall include an allowance for insulation on all faces of ductwork when setting out in horizontal and vertical planes. Supports or bearers, that interrupt or penetrate the insulation or vapour seal, shall not be accepted.

The ductwork Sub-contractor shall provide a standard sheet of support details cross referenced with the manufacturing and installation drawings. Where cantilever brackets or other special forms of support are indicated, they shall be structurally strong enough to take the load and to transfer the imposed load to the building structure. The Contractor may require design and supporting calculations for comment prior to manufacture.

690 DRAINAGE OF DUCTWORK

- Ductwork: Install to drain entrained moisture
- Joints: Lap to minimize moisture leakage.

700 TEST HOLES

- Location: In accordance with CIBSE Commissioning Code Series A and HVCA DW/144.

710 CONTROLS AND SENSING EQUIPMENT

- Install sensors and test points to suit specialist control and sensing equipment.

720 WEATHERPROOFING

- All duct work penetrations to the external shall be weathered by the main Contractor.

740 INSTALLING CONTROL EQUIPMENT

- General: Fit sensors, damper motors and other control equipment.

760 ACCESS TO DAMPERS FOR RESETTING AND MAINTENANCE

- Location: Provide access to damper mechanisms on fire dampers; smoke dampers; combined smoke and fire dampers; and volume control dampers through access doors, false ceilings etc. Where more than one fire damper is installed in a frame provide access to all fire dampers.
- Fire links: Provide access so that they can be replaced.

790 DUCTWORK CLEANLINESS & VERIFICATION

Refer to section U80 above.

915 CLEANING OF KITCHEN EXTRACT SYSTEMS

- Cleaning: In accordance with HVCA TR/19.
- Method of test: Deposit thickness test.
- Method of cleaning: As section 7 TR/19.
- Post clean verification of cleanliness report: Submit.

940 AIR LEAKAGE TESTING OF MEDIUM PRESSURE DUCTWORK

- Standard: To HVCA DW/144.
- Procedure: Carry out tests. Submit report.
- Extent: Random testing of 10% maximum of the ductwork system.
- Test pressure: To HVCA DW/144.
- Documentation: Submit calculations used to arrive at the allowable loss for the section to be tested.

950 AIR LEAKAGE TESTING OF PLANT ITEMS

- Standard: To HVCA DW/144.
- Procedure: Include in-line plant with certificate of conformity for pressure class and air leakage classification for system under test.

960 FIRE DAMPER SPARES

- Fusible links: Supply spares.
  - Quantity: 4 no full set of spares.

U81 AIR HANDLING UNITS

PRODUCTS

Packaged supply and extract air handling plants shall be provided as defined in the schedules of equipment and as indicated on the drawings, or as defined further in this specification.

The air handling unit and fan supplier shall select the internal components of the plants, such that the overall system resistance does not result in system fan power being excessive.

The Sub-contractor shall obtain from his proposed supplier calculations to demonstrate that the Building Regulation requirements for Specific Fan Power, etc are being met along with his technical submission.

All items of the AHU plant and system controls must be capable of being fully interrogated by the building management system through the independent network protocol.

310 AIR HANDLING UNITS

The supply and extract air handling plant shall in all respects comply and align with the requirements and recommendation detailed within the Health Technical Memoranda (SHTM/HTMs), in particular SHTM/HTM 2025/03-01 and 08-01, except where specifically noted within this specification.

The AHU shall be arranged so that the majority of items are under positive pressure. Any item of plant requiring a drain should be on the positive pressure side of the fan.

AHU Plants shall be of a rigid, air tight, assembly and constructed in unitary form or consist of standard modular components, assembled to ensure even airflow throughout plant with no by-passing of active components. Sealing strips shall be provided between all component parts. Factory joints shall be fully tightened and all necessary sealing strips, nuts, bolts and washers etc. being provided for site made joints. The units shall be suitable for operating against closed dampers, i.e.no flow conditions during normal and fire operation. Panels penetrated by service pipes, electrical cables etc. shall be sealed together with all joints having an air leakage integrity at design pressure which is not less than the integrity of the associated ductwork systems.

The units shall incorporate gradual change section pieces between sections to minimise pressure drops, with spacing of components to manufacturer's recommendations to ensure satisfactory operation at each stage and allow access for inspection, cleaning and maintenance. The inside surfaces shall have smooth and easy clean finishes free from structural projection. The location of fan motor, fan belts, filters etc. shall be as detailed in the schedules and on the drawings.

All modular constructed plants shall be provided with purpose made base frames. Bases shall be of sufficient height to accommodate drainage traps from dehumidifiers, humidifiers etc. All plants shall be provided with sufficient access panels/doors and viewing windows to allow maintenance and repairs to be carried out. Coils used in air-handling units shall be rated in accordance with EN 1216. On larger plants, split/multiple coils shall be used.

Construction shall be such as to withstand maximum fan static pressure without deformation and with panel deflection of not more than 1/120 of maximum panel dimension under operating conditions.

Energy recovery shall be via a plate heat exchanger or thermal wheel (fitted with a purge sector), depending on the type of unit. Cleaning access shall be required to both sides of any energy-recovery device.

Where units incorporate humidifying plant, recuperators or cooling coils, the internal surfaces of the units liable to be affected by any free water produced shall be protected by anti-corrosion paint (white) or a similar finish. Such units shall have adequate drain trays to collect water; the drain trays shall be extended, or other means of collection shall be provided to ensure the removal of any water deposited or condensed in adjacent sections.

Trays collecting cooled water shall be insulated to prevent condensation on the outer surface. All the surfaces/features shall be suitable to withstand regular cleaning with a water solution containing 5ppm chlorine, such as 316 stainless steel. Internal sloping surfaces for humidifier and cooling coil sections to fall to drain. All drains shall be provided with glass U-traps suitable to withstand twice the negative/positive pressure produced by the fan and have a screwed access for cleaning and filling as indicated in TM13 (Minimising the risk of Legionnaire's disease) and as further defined in Department of Health Guidance Notes. Certified type test performance certificates shall be issued on completion of plant testing for fans, coils, filters and electric motors etc. Fire rating type test certificates shall be provided for filters. Individual pressure testing certificates shall be provided for coils. Specific fan performance curves shall be provided and these are to relate to the unit ESP with clean filters.

All wiring from fans is to be taken through the unit casing and a 2 metre tail left for connecting to inverters supplied by the controls specialist

Viewing ports and internal illumination shall be fitted to facilitate routine inspection of the AHU. Viewing ports should be at a convenient height so that temporary ladders are not required. Internal illumination should be provided by fittings to at least IP55 rating. Fittings shall be positioned so that they provide both illumination for inspection and task lighting. All of the lights in a unit shall be operated by a single switch.

Space for the future installation of impregnated carbon filters shall be provided in all supply AHUs due to the Hospital site being in the same district as the Scottish Water sewerage works. The type of carbon filters and hence space allowance shall also be capable of dealing with intermittent smells from the helicopter landing pad. Space shall also be included for upgrading the G4 panel pre-filters to F7 grade when the carbon filters are fitted.

The AHU's manufacture shall allow for the pressure drop caused by the carbon filters and F7 pre-filter in their calculations.

- Standard: To BS EN 13053.
- Sub-contractor to provide technical submissions for review. These are to include workshop drawings.
- Construction: Double skin.

320 AIR CONTROL DAMPERS

Motorised low leakage shut off dampers shall be located immediately behind the intake and discharge of each supply and extract system respectively. They shall be of the opposed blade type, opening through a full 90° and must close automatically in the event of power failure or plant shutdown to prevent any reversal of the system airflow.

A manually operated isolating damper should be installed between the main AHU and its distribution system to enable the unit to be isolated when cleaning is in progress.

- Function: Shut off.
  - Damper position: Dampers are to be rigid, with square connections fitted with end and edge seals of a flexible material and with minimal play in linkages. The leakage on shut-off should be less than 2%.
- Damper control: Motorized.
- Type: Multi-blade damper, opposed blade.
- Material: Manufacturer's standard.
- Ancillaries Locking device and Position indicator.

330 FILTERS

Filters shall be securely housed and sealed in well-fitting frames that minimise air by pass.

Mounting frames should be designed so that the air flow pushes the filter into its housing to help minimise air bypass. Mounting frames shall be capable of being withdrawn so that the filter can be changed without having to reach into the unit.

Neither the filter media, nor any material used in the construction of the filters, should be capable of sustaining combustion

All filters sections should be provided with direct reading dial type gauges marked with clean and dirty sectors to visually show filter status.

A complete spare set of filters shall be provided at handover. Filter grades to be as schedule.

Refer to section U83.

340 HEAT RECOVERY

Heat recovery shall be provided to air handling units and be of the type as indicated on the schedules.

Refer to section U85.

350 HUMIDIFIERS

Packaged steam humidifiers shall be provided to air handling units as indicated on the schedules.

Space shall be included within Operating Theatre air handling units for the provision of humidification in the future.

Refer to section U86.

360 PREHEATERS

Duties as schedule.

Frost coils shall be plain tube without fins, where practical. Where this is not practical coils with fins at 6mm spacing shall be used.

Refer to section U84.

370 COOLING COILS

Duties as schedule.

Refer to section U84.

380 REHEATER

Duties as schedule.

Refer to Section U84.

390 FANS

Fans shall be selected to limit the total system (supply and extract fans) specific fan power, as described in the 'Non-Domestic Heating, Cooling and Ventilation Compliance Guide – Section 10. External system resistances for air handling units and fans are given in the schedule.

Fans shall be centrifugal fans with backward curved aerofoil blades, and give an efficiency of not less than 78%.

Fans shall be positioned to 'blow through' the central plant so that the cooling coil and humidifier drains shall be under positive pressure.

Where a centrifugal fan is located with an open intake, the clear distance between the suction opening and the nearest wall should be not less than half the diameter of the inlet. If two fans with free inlets are positioned within the same chamber, their adjacent suction openings should be at least 1 diameter apart.

Fan/s and drive/s shall be provided with mounting frames and isolation mountings.

Motors shall be located externally. On externally driven fans, drive connection or belts shall be provided with airtight seals to prevent leakage. Externally driven fans shall have suitable anti-vibration mountings and frame with flexible connections to the fan sections of the unit. Fan-drive trains, whether supply or extract, should be easily visible without the need to remove access covers.

Fan drives shall be protected by a mesh guard.

All fans shall be controlled by inverter speed control drives supplied by the controls specialist.

Fans shall be capable of being direct start with fixed speed and manual operation in the event of a computer control system failure or software fault.

Particularly attention shall be given to critical care systems serving operating suites, high dependency care units of any type, isolation facilities, laboratories and pharmaceutical production suites in this regard.

- Performance: In accordance with BS 6583.
- Type of fan: Centrifugal.
- Motor mounting: The fan motor shall be external to the air stream.
- Blow through units: Arrange section to allow uniform velocity profile downstream.

Refer to Section U82.

405 ATTENUATOR

Where attenuators are located within the air handling unit they shall be the same cross sectional area as the AHU and have diffusion plenums as necessary.

Cleaning access should be provided at both ends of any attenuator unit.

Attenuators shall meet SHTM/HTM 2025/03-01 and this specification.

The splitters shall be fitted with 0.8mm mild steel galvanised bull nosed entries and exits to reduce pressure drop.

Normally the attenuators shall be installed with the splitters in the vertical plane. However in some circumstances, i.e. close to a vertical bend it may be necessary to install with splitters horizontally. In those circumstances the splitters shall be suitably stiffened to prevent flexing and restriction of the airway.

Refer to section U87.

FABRICATION

The Sub-contractor shall submit details of all mechanical equipment for comment and place orders in a timely fashion to ensure delivery as per programme

The Sub-contractor shall protect the AHU's from damage or interference during the works.

The AHU's shall be blanked off when delivered to site to prevent dust entering the AHU.

The Sub-contractor shall include for the services of the manufacturer's skilled services engineers to start up, test and check all the AHU's and controls. This shall include all tests to prove that all the AHU equipment is working with and responding to the clients BMS network and head end. The units when commissioned shall be "Set Up" to give maximum efficiency. The AHU's shall be witnessed by the Contractor before the plant shall be accepted from the Sub-contractor. The Sub-contractor shall allow for instruction of the

clients representative on the working of the equipment.

510 AIR HANDLING UNIT CASING CONSTRUCTION

Supply air handling plants shall be of a packaged construction with a double skin casing, complete with thermal/acoustic insulation material between the two skins. Units shall house filters, coils, fans and motorised inlet dampers, etc. Heat recovery devices shall also be incorporated as detailed in the AHU schedule.

Vibration isolation shall be provided in the form of spring anti-vibration mountings located under fan and motor bases with flexible connections from the fan discharge and the adjoining ductwork.

- Standard: To BS EN 1886.
- Details: The sub-contractor is to submit shop drawings and details of dimensions and weight for review.
- Thermal performance of casing, to form part of the technical submission.
- Acoustic insulation of casing: To form part of the technical submission.
- Fire protection: To form part of the technical submission.
- Material: To form part of the technical submission.
  - Finish: To form part of the technical submission.
- Air handling unit feet: Base to suit AHU and depth of drain and pipe fall.
- The Sub-contractor is to allow space to integrate the BMS controls into each air handling unit, to serve that respective AHU, and liase with the BMS Specialist to integrate this.

520 AIR HANDLING UNIT ACCESS

- General: Provide access openings and covers complete, including opening devices.
- Seal: To prevent excessive air leakage.
- Seal durability: For normal maintenance operations over at least 10 years.
- Access type: Access doors/hatches as appropriate and where indicated on the drawings or called for in SHTMs, shall be provided complete with handles, locks, keys and latches to the same standards of construction and finish of unit.

Where the unit is large enough for a maintenance engineer to enter the unit, facilities for local maintenance isolation of equipment and opening the doors from the inside shall be provided.

The doors should be large enough e.g. 500mm minimum to allow easy access. Items requiring infrequent access such as attenuators may be via bolted on, lift off panels All doors/panels shall be provided with seals to prevent air leakage.

Access shall be provided as a minimum to fan chamber, dampers, filters, humidifiers and both sides of heating and cooling coils.

Internal lights and double glazed viewing windows shall be provided into fan chambers, either sides of coils, humidifier sections and where indicated on the drawings. Fittings within the unit shall be to IP55 standard and be operated from a single switch. Additionally, the cladding shall be capable of being easily removed as is necessary to obtain access for necessary inspection and maintenance and also for removal of large items of equipment.
All necessary items shall be assembled by means of nuts, bolts, anti-vibration lock

washers or approved quick release fastenings. Access doors on isolation suite extract shall have biohazard label affixed.

EXECUTION

610 COMPONENT ASSEMBLY

- Sealing: Provide gaskets between air handling unit sections to prevent air leakage from casing.
- Site drilling of air handling unit: Not permitted.

620A ACCESS

- Access space: Position air handling units to allow space for maintenance and access.

  Access for servicing shall be as manufacture recommendations and drawings.

  As a minimum the Sub-contractor shall allow the width of the AHU for withdrawing the coils.

630 COIL INSTALLATION GENERALLY

- Venting and draining: Set out pipeline to and from the coils to allow venting and draining of the coils and piping.
- Support: Do not support pipeline and valves on coil connections.
- Access: Allow space to inspect and maintain the coils on both sides.

640 HOT WATER COILS INSTALLATION

- Expansion: Connect pipeline to allow free expansion of headers and tubes.

650A DRAIN LINES INSTALLATION

- All items of plant that could produce moisture must be provided with a drainage system.

  The system shall comprise a drip tray, glass trap, air break and associated drainage pipework. All parts of the drainage system must comply with SHTM 03-01.

  The drip-tray should be constructed of stainless steel, and be so arranged that it shall completely drain. To prevent 'pooling', it is essential that the drain connection should not have an up-stand; and that a slope of 1 in 20 in all directions should be incorporated to the drain outlet position. The tray must be completely accessible or, for smaller units, easily removable for inspection and cleaning.

  Where traps are fitted to plant located outside or in unheated plant rooms trace heating shall be required. The trace heating must not raise the temperature of the water in the trap above 5°C.

660 SERVICES CONNECTIONS

- Entry points: Seal around electrical cable and pipeline entry points to prevent air leakage.

- Flexible cables: Provide between fan motor and local isolator.

670 ISOLATION OF AIR HANDLING UNITS

- Electrical connections: Provide means of isolating air handling units electrically.
- Pipe connections: Provide means of isolating pipelines to air handling units.
- Steam: Provide means of isolating steam to humidifier when access door is opened.

680 SUPPORT FOR AIR HANDLING UNITS

- Method: Purpose made raised frame, with sufficient clearance for drains and traps.

COMPLETION

During the flushing of the pipework system the AHU coil must be by passed or disconnected.

Under no circumstances shall the Sub-contractor flush though the coils

The units shall be supplied initially with one complete set of spare filters and a further set is to be offered for handover to the client at the end of the contract. This set should be carefully packed and labelled for each plant and filter type.

Alongside each filter gauge a permanent label is required with the following information:-

- Type (pre, bag, final etc.)
- Grade
- Size
- Clean PD (at full speed)
- Dirty PD (at full speed)

910 PRE-COMMISSIONING OF COILS

- Preparation:
  - Remove protective covering.
  - Check frost protection and drain if heat is not available in freezing conditions.
  - Straighten fins.
- Cleaning and chemical treatment: Use chemicals compatible with the materials in the coils.

920 AIR LEAKAGE TESTING

- Testing: In accordance with HEVAC Guide to air handling unit leakage testing.

930 TESTING

- Test location: On site before incorporation in works. (Selected factory testing/inspection may be carried out)
- Test results: Submit.

U82 FANS

PRODUCTS

All fans shall be type tested to BS.848 and a type test certificate shall be provided for each type of fan supplied. All fan duties shall be at an air density of 1.2 kg/m³ at 1.01325 bar and 15°C. Fan outlet velocities shall not exceed 10.00 m/s. Each fan shall be provided with dedicated fan performance curves, with the duty selection, absorbed power requirements, motor selection and sound power levels clearly indicated.

All fans shall be selected for low noise.

All fans shall be low energy type.

All fan's and system controls must be capable of being fully interrogated by the building management system through the independent network protocol.

All fans are to be inverter driven.

310 AXIAL FLOW FANS

Axial flow fans shall be of the long case pattern with a heavy gauge mild steel casing galvanised after fabrication, flanged and drilled at each end.

The impeller shall be of multi-blade aerofoil section constructed from die cast aluminium or heavy-duty steel. The hub design shall allow for manual adjustment of the blade pitch angle. Multi-stage axial fans shall be arranged with contra-rotating stages.

The impellers shall be directly driven through a totally enclosed motor with ball or roller bearing to suit the application. The fan motor shall be sized so that a blade pitch angle adjustment of the impeller of up to 2° shall be possible without a change of motor. During assembly of each fan the fan impeller shall be statically balanced to a level of 4.5 mm/s RMS at the fan feet. All bearing lubrication shall be extended to the outside of the casing. Axial fans shall be complete with anti-vibration mounts, flexible connections and matching flanges for duct connection and bellmouths and guards where fans are in free air. Motor terminal boxes shall be external to the casing and provide protection to IP55 as defined in BSEN.60529.

- Performance: To BS 848-1.
- Sub-contractor to provide technical proposals for review.
- Mechanical safety: To BS 848-5.
- Electrical safety: To BS EN 60335-2-80.
- Dimensions: To BS 848-4.
- Operating conditions:
  - Environment: Sewerage works nearby.
  - Air density: 1.20 kg/m3.
- Operation: As schedule and drawings.
- Inspection doors: Fit airtight inspection doors giving access to drive motors and other components requiring regular servicing and maintenance.
- Motor and drive: Match fan.
- Material:
  - Casing: Manufacturer’s standard. Sub-contractor to submit proposals.

- Impeller: Manufacturer's standard.
- Anti-vibration mountings: Manufacturer's standard. Sub-contractor to submit proposals.
- Flexible duct connections: Manufacturer's standard. Sub-contractor to submit proposals.
- Accessories: As schedule and drawings.

320 CENTRIFUGAL FANS

Fan units shall be installed as detailed on drawings and fan schedules. External fans shall be weatherproofed and suitable for conditions.

The assembly is dynamically balanced to DIN ISO 1940. Motors shall be constructed from aluminium and be suitable for speed control.

Fans shall be suitable for horizontal through to vertical shaft operation. Supplied IP55, with removable drain plugs.

Sealed for life bearings lubricated with wide temperature range grease. Motors shall be fitted with thermostat overheat protection as standard. Three phase motors shall be suitable for inverter speed control down to 20% of full speed where specified.

Fans shall be fully cased, complete with an externally mounted pre-wired electrical terminal box. Casings shall be from sheet steel with integral pre-drilled inlet flanges.

Casings shall have a galvanised finish to provide a high corrosion resistance

- Performance: To BS 848-1.
- Sub-contractor to provide technical proposals for review.
- Mechanical safety: To BS 848-5.
- Electrical safety: To BS EN 60335-2-80.
- Dimensions: To BS 848-4.
- Operating conditions:
  - Environment: Sewerage works nearby.
  - Air density: 1.20 kg/m3.
- Operation: As Fan schedule.
- Motor and drive: Match fan.
- Casing: Manufacturer's standard. Sub-contractor to submit proposals.
- Inspection doors: Fit airtight doors in scroll and cover.
- Mounting: As Fan schedule and drawings.
- Material Galvanized sheet steel.
- Anti-vibration mountings: Manufacturer's standard. Sub-contractor to submit proposals.
- Flexible duct connections: Manufacturer's standard. Sub-contractor to submit proposals.
- Accessories: As Fan schedule.

350 ROOF MOUNTED FANS

The roof mounted extract/supply fans shall be located in the positions indicated on the drawings and in accordance with the relevant fan schedule. It shall be a low profile cowl manufactured in flame retardant GRP.

The roof fan shall suit the roof profile.

The fan shall be supplied complete with backdraught shutters, bird guard, purlin box curb,

hand guard, specific details of the curb and purlin shall be confirmed by the main Sub-contractor.

The Sub-contractor shall make due allowance for supporting the fan via the provision of purpose made trimmers between purlin. The trimmers shall be sized to adequately support the weight of the fans.

The fan shall be supplied with all the control interfaces to integrate with the clients BMS system.

- Performance: To BS 848-1.
  - Inlet and outlet arrangement: Sub-contractor to provide technical proposals for review.
- Sub-contractor to provide technical proposals for review.
- Mechanical safety: To BS 848-5.
- Electrical safety: To BS EN 60335-2-80.
- Dimensions: To BS 848-4.
- Operating conditions:
  - Environment: Sewerage works nearby.
  - Air density: 1.20 kg/m3.
- Operation: As Fan schedule and drawings.
- Motor and drive: Match fan.
- Anti-vibration mountings: Manufacturer's standard. Sub-contractor to submit proposals.
- Flexible duct connections: Required.
- Flexible electrical connection: Fans electrical power shall be rated for outdoor use.
- Accessories: As Fan schedule.

355 SMOKE EXTRACT FANS.

Fans shall be the bifurcated type are indicated or required, the motor shall be outside the airstream. Motors may be placed between the two halves of the casing using ambient air for motor cooling. Where hot gases, vapours or corrosive fumes are being handled, the motor bearings shall be suitable for operation at the temperatures resulting for the processes involved.

Fans shall be specially constructed for the temperature and the running duration specified during Fire/smoke condition.

- Standard: To BS EN 12101-3.
- Sub-contractor to provide technical proposals for review.
- Electrical safety: To BS EN 60335-2-80.
- Accessories:
  - Flexible connections: Required.
  - Vibration isolators: Manufacturer’s standard. Sub-contractor to submit proposals.
- Control: As schedule.
- Starting device: As schedule.

360 TOILET EXTRACT FANS

Dirty extract systems shall be provided with dedicated extract fans. The fans shall be arranged for duplicate operation in a run and stand-by configuration.

The fans shall be of the centrifugal type with forward curved blades. The impellers shall be

belt driven.

Each fan shall have its own dedicated motor and drive assembly mounted on a common base frame with spring anti-vibration mounts between the frame and the unit case/framework.

The fans shall be arranged for auto changeover achieved via the BMS. On failure of the duty fan the stand-by shall start and run. The changeover shall also include the automatic activation of backdraught dampers. The fan enclosure shall be configured to allow continuous operation of the stand-by fan while the failed unit is removed for repair or replacement. The fan and motor shall be removed as a common assembly.

The fans shall be housed in a common heavy gauge aluminium casing arranged for ducted inlet and outlets.

The units shall be provided with airflow and failure monitors suitable for interfacing with the BMS. Auto changeover shall be undertaken by the BMS.

- Performance: To BS 848-1.
  - Inlet and outlet arrangement: As drawings.
- Manufacturer: Sub-contractor to provide technical proposals.
  - Product reference: Sub-contractor to provide technical proposals.
- Sub-contractor to provide technical proposals for review.
- Electrical safety: To BS EN 60335-2-80.
- Operation: As schedule
- Electrical supply type: As schedule.
- Accessories:
  - Access panel: Removable panel
  - Controls: Speed controller to match fan, refer to BMS for further details.
  - Silencer.
  - Backdraught damper.
  - Anti-vibration mount.
  - Guards.

370 CONSTRUCTION AND HANDLING

- Casings: Rigid, so there is no drumming under operating conditions.
- Lifting: Provide lifting eyebolts or similar facilities on fans or sections heavier than 20 kg.

EXECUTION

610 INSTALLATION

- Fixing: Use fixing points provided. Do not strain the fan structure when bolts are tightened.
- Orientation: Mount impeller shaft horizontally.
- Alignment: Install fan to allow optimum air flow path.

U83 AIR FILTRATION

PRODUCTS

Filters may be provided in separate plant section of the air handling unit or, if specified, as part of a common section. Filter banks shall be provided with mounting frames to suit standard commercially available filter cells, arranged for side or front withdrawal as per schedules.

Air filter shall be constructed shall not not be capable of supporting combustion.

Gauges shall be provided across each filter. Tees and branch tubing should be fitted so that the controls specialist to fit a separate dirty filter warning pressure switch.

All filters shall have a Filter dirty alarm to the BMS.

Alongside each filter gauge a permanent label is required with the following information:-

- Type (pre, bag, final etc.)
- Grade
- Size
- Clean PD (at full speed)
- Dirty PD (at full speed)

One complete spare set of filter media for each plant shall be provided at handover, being carefully packed for storage and labelled for respective plant and filter types.

The Sub-contractor shall supply and install services and equipment to perform as per specification. The Sub-contractor shall submit details of all mechanical equipment for comment and place orders in a timely fashion to ensure delivery as per programme.

Where a particular manufacture is specified, the Sub-contractor shall include for that manufacturer.

Where considered appropriate, provide for equivalent standard alternatives to be offered for consideration.

This must be done in a timely manner and the Sub-contractor shall provide all details including but not limited to.

- Detailed description
- Cost comparison
- Technical comparison
- References to standards

310 PRIMARY FILTERS

Filter media shall be manufactured from 100% recycled materials. Filter media shall be a cotton and synthetic blend, lofted to a uniform depth, and formed into a uniform radial pleats.

A welded wire grid, treated for corrosion resistance, shall be bonded to the downstream side of the media to maintain the radial pleat and prevent media oscillation.

An enclosing frame, of biodegradable board shall provide a rigid and durable enclosure.

The frame shall be bonded to the media to prevent air bypass.

The manufacturer shall provide evidence of facility certification to ISO standard.

- Performance: To BS EN 779.
- Filter type: Sub-contractor to submit proposals.
- Manufacturer: Sub-contractor to submit proposals.
  - Product reference: Sub-contractor to submit proposals.
- Duty:
  - Air flow rate: Sub-contractor to submit proposals.
  - Air velocity: Sub-contractor to submit proposals.
  - Initial filter pressure drop: Sub-contractor to submit proposals.
  - Final filter pressure drop: 150 Pa.
  - Filter class: As schedules.
  - Filter height, width and limiting depth: As schedule and drawings.
  - Conditions: Sewerage works nearby.
- Flammability: Non-flammable for duration of recommended working life.
- Casing: Manufacturer's standard.
- Access: As specification.
- Filter mounting frames: Purpose made, rigid, with building-in ties where filter is mounted in walls or partitions.
- Allow for future upgrade to grade F7 bag filter when carbon filter is fitted.

320 SECONDARY FILTERS

Bag or extended surface type filters shall be provided to the required grade or better as specified, in the Equipment Schedules with maximum air velocity at face not exceeding 2.5 m/s. Filter meida shall be manufactured from 100% recycled meida.

Filters shall be fully self-supporting without external ties or stiffening frames. Filters shall inflate fully, shall not sag or flutter, nor have effective medium area reduced by obstruction due to contact with other filter faces or housing surfaces when operating between 60% and 110% of design air volume for constant volume systems or between the specified minimum and maximum air volume rates for multi-speed systems. Bag shall be short or normal length as noted in the Schedule of design criteria.

- Performance: To BS EN 779.
- Filter type: Bag.
- Manufacturer: Sub-contractor to submit proposals.
  - Product reference: Sub-contractor to submit proposals.
- Duty:
  - Air flow rate: Sub-contractor to submit proposals.
  - Air velocity: Sub-contractor to submit proposals.
  - Initial filter pressure drop: Sub-contractor to submit proposals.
  - Final filter pressure drop: 250 Pa.
  - Filter class: Sub-contractor to submit proposals.
  - Filter height, width and limiting depth: Sub-contractor to submit proposals.

- Flammability: Non-flammable for duration of recommended working life.
- Casing: Rigid.
- Access: Sub-contractor to submit proposals.
- Filter mounting frames: Purpose made, rigid, with building-in ties where filter is mounted in walls or partitions.
  - Material: Sub-contractor to submit proposals.

330 HIGH EFFICIENCY PARTICLE ARRESTOR (HEPA) FILTERS

High efficiency particulate air filters (HEPA/absolute) shall remove virtually all particles from air.

HEPA filters shall be H14 (EU 14) (unless otherwise Specified) with an efficiency of 99.995% @ MPPS.

HEPA filters shall be of the replaceable panel type with leak proof seals. They shall be installed in a manner that permits on site validation of the filter and its housing. This shall involve the release of a Dispersed Oil Particle (DOP) challenge smoke through an injection point upstream of the filter and a measurement of the DOP penetration across the downstream face.

A photometer shall be used to detect leaks.

The Method of testing/Validation with DOP shall be as set out in HTM 03-01.

Filter housing and seal (generally Housing shall be Electro zinced steel painted white RAL 9010, seal shall be Silicone or Polyurethane gel) shall be suitable for application.

- Standard: To BS EN 1822.
- Manufacturer: Sub-contractor to submit proposals.
  - Product reference: Sub-contractor to submit proposals.
- Use of conditioned space: Sub-contractor to submit proposals.
- Duty:
  - Maximum air flow rate: Sub-contractor to submit proposals.
  - Air velocity: Sub-contractor to submit proposals.
  - Filter height, width and limiting depth: Sub-contractor to submit proposals.
- Filter media: HEPA filter media - Group H.
- Filter class: H14.
- Filter casing: Provide with gasket fitted to casing.
- Filter material: As above.
- Flammability: Non-flammable for duration of recommended working life.
- Access: Access shall be provided for filter change and DOP test.
- Filter frame material: To suit application, as schedule.

350A IMPREGNATED CARBON FILTERS (INFORMATION FOR SPACE ALLOCATION ONLY)

Due to the Hospital site being in the same district as the Scottish water Sewerage works it is considered that large amounts of natural ventilation is not a practical solution.

The Sub-contractor shall allow for a specialist consultant to test the air and advise on the type of impregnated carbon to be utilised.

Carbon filters shall remove gases and vapours from the air stream and are graded according to the range of substances they can remove.

Carbon filters shall be impregnated carbon suitable for the atmosphere on the site.

The carbon used shall have the correct dwell time for the conditions. This shall include the sewage works and the helicopter exhaust.

All kitchen extract fans shall also be provided with carbon filters.

The Sub-contractor's specialist shall also select filters for these systems.

- Manufacturer: Sub-contractor to submit proposals.
  - Product reference: Sub-contractor to submit proposals.
- Duty:
  - Air flow rate: Sub-contractor to submit proposals.
  - Air velocity: Sub-contractor to submit proposals.
  - Initial filter pressure drop: Sub-contractor to submit proposals.
- General: Provide absorbent bed filled with uniform thickness of activated carbon granules constructed to prevent settlement. Provide bonded carbon cells to prevent pinholing.
- Media type: Sub-contractor to submit proposals.
- Casing: Provide casing with removable panels.
- Casing material: To suit application, as schedule.

370 EDGE SEALS

- Function: Prevent air by-passing filters. Seals must remain effective after removal and replacement of cells.

380 PRESSURE GAUGES

Each filter shall have a Filter dirty alarm Filter status and Filter dirty alarm. This shall be compatible with the client BMS system:

- Type: Dial.
- Manufacturer: Sub-contractor to provide technical proposals.
  - Product reference: Sub-contractor to provide technical proposals.
- Gauge markings: Positions equivalent to 'Filter Dirty' and 'Filter Clean' conditions.
- Pressure differential switch: Provide for visual or audio warning of 'Filter Blocked Condition'.

390 TERMINAL FILTER HOUSINGS

- Terminal filter housing shall be easy to maintain, clean housing, able to accept a range of standard diffusers and grilles. The diffuser and colour shall match the other supply and extract diffusers.

Before any HEPA filters are installed the ductwork system shall be suitably clean.

The terminal housings shall have:

Polyester power coat finish

Limited travel filter clamps
DOP/Pd sample port
Installation hanging brackets
Fully welded flange
Top or side circular inlet

Damaged filters must not be install in the system.

- Filters housed: HEPA and ULPA.
- Housing seals: Gaskets between holding frames on banks of filters. Seal filters into steel casing.

395 FILTER SAFE-CHANGE UNITS

Where indicated on the drawings supply and install safe change housings complete with all pre and main filters. All housings to be manufactured from seam welded carbon steel with 2 pack epoxy coat finish.

Each filter assembly shall have the following features:-

- Inlet and outlet ductwork connections and support feet.
- Inlet and outlet tight shut off dampers.

  Tight shut off dampers shall have seals to KTA 3601 or DIN 25414 (maximum leakage 0.01m³/hr x m² with a pressure differential of 2000Pa). The dampers shall be pressure tight to 5000Pa. The damper mechanism shall be designed such that after closure no energy is required to keep the damper in a closed position. The case and blades of the unit shall be constructed of sheet stainless steel to BS 1449 – Grade 304 – S11 Finish 2B. Bearing assemblies shall be stainless steel or brass. Damper blade sealed shall be neoprene foam rubber material, temperature resistant up to 80℃.

- Manometer points across each filter housing with manometer fitted across the hepa filter. Tappings to be configured to allow for BEMS monitoring of hepa filter condition. Manometer to be mounted on the assembly framework.
- 2 No. stainless steel cam bars for filter location.
- Aerosol sampling point in bottom spigot.
- All necessary safe change bag and retaining ring sets.
- All filter assemblies shall be factory pressure tested to a pressure of 2500Pa for minimum 1 hour and a test certificate provided.
- Leak test devices to DIN 1946 shall also be provided to allow maintenance staff to ensure replacement filters are properly seated prior to operation.

Each unit shall have:

- Minipleat high capacity absolute filters, 610 x 610 x 292mm deep with MDF case, efficiency to BS EN 1822 grade H14, 99.995%. All filters throughout the development shall be a common grade.

- Hardened case pre-filters 610 x 610 x 60mm to BN 779 grade G7.
- Upon completion of installation, a site validation test shall be carried out to achieve a maximum of 0.005% penetration and certificate provided.

EXECUTION

610 INSTALLING FILTER FRAMES

- Fixing: Securely fasten frames to ductwork walls.
- Gaps around the frames: Seal with mastic sealant.

620 INSTALLING FILTERS

- Mounting: Clamp securely against sealing gasket to prevent leaks.

630 INSTALLING PRESSURE GAUGES

- General: Fix external to unit to allow easy observation, within 3 m of filter.

U84 HEATING AND COOLING COILS

PRODUCTS

To facilitate maintenance access, auxiliary wet batteries should be located above corridors or other non-critical areas and not above patient occupied spaces. Access doors shall met the requirements in section U80.

310 LOW TEMPERATURE HOT WATER HEATING COILS

Hot water coils shall be installed as shown on drawings.

Tubes are arranged in a staggered pattern with respect to adjacent rows to provide maximum heat transfer efficiency.

Return bends are the full thickness and diameter of the coil tubes to provide unrestricted flow and undiminished strength Access for cleaning must be provided to both sides of all coils and batteries.

All water batteries shall be designed to ensure equal flow through all circuits. The water flow and return connections together with the airflow direction shall be permanently marked on the casing. All coils shall be supplied complete with vents and drains. Provision shall be made for expansion of the tubes and for effective venting of the coils.

Coils shall be arranged so as to facilitate removal of the coils without draining local pipework

On large coils, multiple or split coils shall be used to ease installation, repair and maintenance operations.

Heat exchanger finned surfaces shall extend the full width of the coil casing. Coils shall be suitably protected against corrosion with due regard to the geographical location of the coil and local atmospheric conditions. Sealing devices shall be provided around the casing to prevent air by-pass

Casings shall be galvanised sheet steel with angle framing at each end drilled ready to receive the counter flanges on the connecting ductwork. Coils shall be supported so that their weight is not transmitted to ductwork and so they can be removed without disturbing adjacent ductwork. Inspection doors shall be provided on both the upstream and the downstream sides of the coils.

All coils shall be tested at the manufacturer's works or an approved testing laboratory and rated for thermal performance to BS EN 13053 and certificates provided. These tests shall also include confirmation of water pressure drops at the design flow rates. These pressure drops shall be from pipework pressure topping on the flow and return connections external to the unit.

The maximum water system pressure drop shall be *25* kPa. The maximum air pressure drop across the coil shall be *20* Pa. Any site tests that show either pressure drops above this level shall require the replacement of the coil.

Where auxiliary/ret - heater-batteries are located in false ceilings, they should be fitted

with a catch tray and leak detection alarm. The catch tray shall be installed under both the battery and the control valve assembly to protect the ceiling from leaks. The moisture sensor and alarm shall be fitted in the tray and shall alarm the clients BMS in the event of a leak.

- Performance: To BS 5141-2 and BS EN 1216.
- The Sub-contractor shall submit proposals for review.
- Materials: Solid drawn copper tubes with copper fins.
- Tube wall thickness: At least 0.7 mm.
- Fin thickness (minimum):
  - Aluminium: 0.4 mm.
  - Copper: 0.3 mm.
- Fin spacing (maximum): As schedule.
- Thermal expansion: Allow for movement.
- Casing finish: Galvanized mild steel.
- Access doors: Hinged, airtight and watertight for maintenance.
- Draining and venting: As specification.
- Water test pressure: Up to 2.1 MPa or 1.5 times the working pressure, whichever is greater.
- Packaging: Fit protection for fins before despatch.
- Protection: Fit blank flanges or caps to pipe connections after manufacture.
- Accessories: As schedule.

320 CHILLED WATER COOLING COILS

Access for cleaning must be provided to both sides of all cooling coils. The coil shall have electro tinned fins.

Coils frames and casings shall be manufactured from stainless steel.

Pipe Connections shall be screwed up to 50mm, flanged above. Maximum velocity over the coils shall be 2m/s.

The coil shall have an eliminator.

All cooling coils shall be fitted with their own independent drainage system. The system shall comprise of a stainless steel drip-tray, glass trap, air break and associated drainage pipework.

The drip tray shall be arranged to drain completely and prevent pooling.

The drain connection shall not have an up-stand. A slope of 1 in 20 in all directions shall be incorporated to the drain outlet position.

Where coils are greater than one metre high intermediate drain trays shall be provided.

The AHU base shall be high enough to accommodate the trap and pipe work fall.

The tray shall be completely accessible or for inspection and cleaning.

Each drip-tray should be provided with its own drain trap. The drain trap should be of the clear (borosilicate) glass type.

The trap should have a means for filling and should incorporate couplings to facilitate removal for cleaning. It should be located in an easily visible position where it shall not be subject to casual knocks. The pipework connecting it to the drainage tray should have a continuous fall of not less than 1 in 20.

Water from each trap must discharge via a clear air gap of at least 15 mm above the unrestricted spill-over level of either an open tundish connected to a drainage stack via a second trap, or a floor gully. A support should be provided to ensure that the air gap cannot be reduced. Drainage pipework shall be copper.

A baffle or similar device must be provided in the drip-tray to prevent air bypassing the coil, and the tray should be large enough to capture the moisture from the eliminator, bends and headers.

The cooling-coil control valve should close upon selection of low speed, system shut-down, low airflow or fan failure.

The maximum water pressure drops across the coils shall be *30* kPa. The maximum air pressure drops across the coils shall be 80 Pa. Any site tests that show pressures above either of these levels shall require the replacement of the coil.

- Performance: To BS 5141-1 and BS EN 1216.
- Duty: Refer to drawings and schedules.
- Materials: Solid drawn copper tubes with copper fins, all electro-tinned.
- Tube wall thickness: At least 0.7 mm.
- Fin thickness (minimum):
  - Aluminium: 0.4 mm.
  - Copper: 0.3 mm.
- Casing:
  - Finish: Stainless steel
  - Return bends: Provide removable covers. Lag and vapour seal the bends.
- Eliminator plates: Install downstream of all coils.
- Draining and venting: As specification.
- Access doors: Hinged, airtight and watertight for maintenance.
- Water test pressure: Up to 2.1 MPa or 1.5 times the working pressure, whichever is greater.
- Packaging: Fit protection for fins before despatch.
- Protection: Fit blank flanges or caps to pipe connections after manufacture.
- Accessories As schedule.

- Airflow: Evenly distributed over face area of coil (to be verified at commissioning)
- Air velocity: Ensure it is below level at which moisture carryover occurs.

340 ELECTRIC HEATER BATTERIES

Generally electric heating batteries are to be avoided. Their use should be restricted to low power use (for example trimming control).

Where used, electric heaters shall be provided with high temperature cut out protection with automatic reset.

The Sub-contractor is to provide technical submissions for review.

- Casing material: Aluminium.
  - Casing finish: Natural.
- Access doors: Hinged, airtight and watertight for maintenance.
- Heating elements: Mount on removable terminal plate.
  - Type: As schedule.
- Terminal boxes: Welded steel.
- Safety cut-out switch: Automatic reset, wired in series or via contactor with heating elements.
- Controls:
  - Fan interlock to prevent heater operating without fan running.
  - Run-on timer to allow airflow to cool heater before switching off fan.
- Air flow detector switch: Wired in series with other safety devices.
  - Type: Differential pressure.
- Accessories: Heater batteries to be thyrister controlled.

EXECUTION

During the flushing of the pipework system all coils must be by passed or disconnected. Under no circumstances shall the Sub-contractor flush though the coils

610 INSTALLATION

- Equipment, controls and instruments positioned next to heating coils: Protect from thermal radiation.
- Fixings: Support coils independently of ductwork.

620 ELIMINATOR PLATES INSTALLATION

- General: Fit to allow removal from coil casing.

630 DRAIN TRAP INSTALLATION

- Air break: Locate between trap outlet and drainage system.
- Traps under suction: Install the outlet below the inlet by a depth equivalent to at least one and a half times working pressure.
- Traps under positive pressure: Install inlet and outlet at same level.

U85 HEAT RECOVERY

Thermal wheel heat exchangers shall be incorporated within extract air plants handling uncontaminated air (non hygro-scopic type). These plants shall also include main dirty air extract plants. The heat exchangers shall transfer heat energy within the extract air to a pumped circulation water heat recovery system. Heat exchangers within the fresh air plants shall utilise the recovered heat to pre-heat incoming fresh air.

Where the use of thermal wheel heat recovery units have been found to be inappropriate plate recuperator systems are to be employed.

The heat recovery systems shall be configured to operate at all times when useful energy can be recovered and used by the various air plants.

PRODUCTS

310 PLATE RECUPERATORS

- The Sub-contractor is to submit proposals for review based upon details shown on drawings, schematics and schedules.
- Efficiency: minimum 55%.
- Heat transfer plates: Manufacturer's standard for application. Sub-contractor to provide technical submission.
- Coating: Manufacturer's standard for application.
- Access doors: Hinged, airtight and watertight for maintenance.
- Accessories:
  - Face and bypass dampers;

330 THERMAL WHEELS

- The Sub-contractor is to submit proposals for review based upon details shown on drawings, schematics and schedules.
- Efficiency: minimum 65%.
- Rotor: Non-hygroscopic.
- Access doors: Hinged, airtight and watertight for maintenance.
- Accessories:
  - Adjustable purging sector;
  - By-pass damper;
  - Matching ductwork flanges;
  - Return air damper; and
  - Speed controller.

EXECUTION

630 INSTALLING DRAIN TRAPS

- Air break: Locate between trap outlet and drainage system.
- Traps under suction: Install the outlet below the inlet by a depth equivalent to at least one and a half times working pressure.
- Traps under positive pressure: Install inlet and outlet at same level.

U86 AIR TREATMENT

Full humidity control, including humidification and dehumidification, shall be provided only in critical air-conditioned clinical areas such as the Pharmacy Aseptic Suite or wherever close control of humidity is required for the successful operation of sensitive equipment, e.g. computers.

Only steam injection manifold-type humidifiers are considered suitable for use in health building air-conditioning systems. Water humidifiers of any other type shall not be used.

The local steam generator must be fed with potable quality water. Should the humidifier be unused for a period exceeding 48 hours, it must be capable of automatically draining its water content, including that contained in the supply pipework, right back to the running main and leave itself empty. The humidifier shall have overriding controls separate from the normal plant humidistat.

Their purpose is to prevent excessive condensation in the conditioned space when starting up. A time delay shall be incorporated into the humidifier control system such that the humidifier does not start until 30 minutes after the ventilation/plant start-up. In addition, a high limit humidistat shall be installed to limit the output of the humidifier so that the saturation in the duct does not exceed 70%.

The humidifier control system should ensure that the humidifier is switched off when the fan is not running.

- Type: Steam from self contained boiler.
- Water quality: As schedule.

PRODUCTS

310A STEAM HUMIDIFIERS

- Manufacturer: The Sub-contractor is to submit proposals for review.
  - Electrical supply type: Three phase.
- Steam source: Local Electric.
- Safety of appliance: To BS EN 60335-2-88.
- Material: Corrosion resistant.
- Access doors: Hinged airtight and watertight for maintenance.
- Safety signs: On access door, a label reading 'Isolate steam supply before opening' in letters at least 25 mm high.
- Accessories: Manufacturer's standard

EXECUTION

610 INSTALLATION

- Discharge: Install humidifiers so that air flow is uniform over cross-section of ductwork.
- Position: Do not install next to air heating coils.

620 CONDENSATE CONNECTIONS

- General: Arrange condensate lines so that back pressure does not exceed manufacturer's recommendations.

630 THERMAL EXPANSION

- General: Connect pipelines to take up thermal expansion without stressing humidifiers.

640 INSTALLING DRAIN TRAPS

- Air break: Locate between trap outlet and drainage system.
- Traps under positive pressure: Install inlet and outlet at same level.

650 FIXINGS

- General: Support humidifiers from building structure on zinc coated steel supports, independently of adjacent ductwork. Provide separate supports for components mounted outside casings.

U87 SILENCERS AND ACOUSTIC TREATMENT

PRODUCTS

The attenuators including cross talks, shall be selected and installed by the Sub-contractor. The Sub-contractor shall appoint a specialist to select these, using the noise criteria detailed elsewhere. The permissible pressure drop on cross talk attenuators is *25* Pa and *50* Pa on other attenuators. The Sub-contractor is to provide technical submissions for the silencers and acoustic treatment.

310 CIRCULAR SILENCERS

Silencers shall be installed generally as indicated on the drawings.

Silencers shall be of the size, configuration, capacity and acoustic performance required to meet the specified acoustic criteria.

All circular silencers shall be constructed with a galvanized steel casing. All casing seams and joints shall be lock formed and sealed. All fixings to the casing to be with blind rivets to eliminate leakage.

The silencer infill to be covered in ICI Melinex or similar to prevent particle migration. The membrane shall have a 25 year service life.

- Performance requirements: To BS EN ISO 7235 and BS EN ISO 11691.
- Casing: galvanised sheet steel minimum thickness 0.8mm
- Splitters: galvanised perforated sheet screen minimum thickness 0.8mm with an open area of at least 23%.
- Lining material: Inert, fire proof, inorganic and non- hygroscopic minimum density 48kg/m^3.
- Markings: Show direction of air flow on silencer.

320 RECTANGULAR SILENCERS

Silencers shall be installed as indicated on the drawings.

Silencers shall be of the size, configuration, capacity and acoustic performance required to meet the specified acoustic criteria.

All Rectangular silencers shall be constructed with a galvanized steel casing. All casing seams and joints shall be lock formed and sealed. All fixings to the casing to be with blind rivets to eliminate leakage.

The silencer infill to be covered in ICI Melinex or similar to prevent particle migration. The membrane shall have a 25 year service life.

- Performance requirements: To BS EN ISO 7235 and BS EN ISO 11691.
- Casing: galvanised sheet steel minimum thickness 0.8mm
- Splitters: galvanised perforated sheet screen mimum thickness 0.8mm with an open area of at least 23%.
- Lining material: Inert, fire proof, inorganic and non- hygroscopic minimum density 48kg/m^3.
- Markings: Show direction of air flow on silencer.

A49618520

330 AIR TRANSFER AND CROSS TALK ATTENUATORS

Cross Talk attenuators shall be installed in the ductwork in locations shown in the plans.

The performance of the attenuators is to be such that the privacy to be maintained between adjacent spaces.

The attenuator shall control noise in particular speech via the ductwork.

The Sub-contractor shall submit calculations for examination *by the acoustic consultant*.

All cross talk silencers shall be constructed with a galvanized steel casing. All casing seams and joints shall be lock formed and sealed. All fixings to the casing to be with blind rivets to eliminate leakage.

The silencer infill to be covered in ICI Melinex or similar to prevent particle migration. The membrane shall have a 25 year service life.

- Performance requirements: To BS EN ISO 7235 and BS EN ISO 11691.
- Casing: galvanised sheet steel minimum thickness 0.8mm
- Splitters: galvanised perforated sheet screen mimum thickness 0.8mm with an open area of at least 23%.
- Lining material: Inert, fire proof, inorganic and non- hygroscopic minimum density 48kg/m^3.
- Markings: Show direction of air flow on silencer.

The cross talk attenuator shall be installed / located to avoid flanking ideally places in the ductwork as it passes through the wall separating rooms.

350 ACOUSTIC INSULATION

The Sub-contractor's acoustic specialist shall examine the need for acoustic lagging. Acoustic lagging shall be provided and fitted where necessary to the outside of the ductwork to achieve an enhanced Sound Reduction Index (SRI) of ductwork and hence reduce noise break in or break out.

The lagging shall consist of mineral wool density not less than 48kg/m3 and not less than 50mm thick.

The mineral wool shall be covered with an outer skin typically lead weighed PVC material or 0.8mm thick galvanised mild steel. All joints shall be suitably sealed to maintain acoustic integrity.

The lagging shall be securely fixed to the pipework / ductwork using mechanical fixings.

- Material: Lightweight mineral wool.
- Outer covering: As specification.

EXECUTION

610 ACOUSTIC LININGS

- Access: Where personnel access is provided, protect acoustic linings to prevent damage.

U88 AIR TERMINAL DEVICES

PRODUCTS

Air terminals shall be provided as indicated on the drawings, or as defined further in this specification.

The Sub-contractor shall co-ordinate the reflected ceiling plan.

The Sub-contractor shall appoint a specialist supplier to provide the selections and schedules for the air terminal devices. The Sub-contractor's specialist shall select the grilles and diffusers using the locations and air volumes shown on the drawing. The Sub-contractor shall submit these for review.

All diffusers and grilles shall be selected for quiet operation, using the noise criteria specified.

The Sub-contractor shall provide samples of each type of air terminal device for review.

Neck velocity shall not exceed 2.5 m/s on any terminal device (diffusers/grilles etc).

310 AIR TERMINAL DEVICES, SPECIALIST UCV HOODS

The UCV shall be a Vertical-flow type system and meet all requirement of SHTM/HTM 2025/03-01 including table 6.

The return air grilles/diffusers shall be sited so as not to cause short circuiting. The Sub-contractor shall comply with SHTM/HTM 2025/03-01 to this regard.

The Sub-contractor shall ensure that each face or each corner of the theatre shall have an air path to provide good air circulation and to prevent entrainment in the clean zone. Air velocities for and over the UCV shall be as SHTM/HTM 2025/03-01 as a minimum. UCV systems shall come complete with HEPA filters. A set of new filters shall be issued to the client following commissioning of the unit.

The final filters shall be installed in a leak-proof housing in a manner that allows the terminal unit, filters and their seals to be validated. A challenge test shall be carried out during commissioning to prove the effectiveness of the complete installation. Challenge test shall be as manufactures recommendations and the Method of testing/Validation with DOP shall be as set out in HTM 2025/03-01.

The UCV shall have direct-reading pressure gauges for each final filter and a return-air filter to capture the relatively coarse particles that would otherwise significantly reduce the life of the final filter. The return air filter shall be G3 grade to BS EN 779 as a minimum.

The UCV shall not exceed NR 50. Any in line attenuation shall non-particle-shedding and fire-resistant.

Lighting for the UCV shall be as CIBSE lighting guide LG2 and BS EN 12464-1.

Operating luminaires should comply with the photometric requirements detailed in relevant sections of BS EN 60601.

The lighting level shall be even throughout and luminaries shall not adversely affect the air flow.

The functions of the canopy circulation fans shall be continuously monitored by a BMS control unit.

Additional to this the UCV system shall have

- a set-back facility that shall reduce the air supplied through the UCV terminal to a volume that equates to an amount not less than 25 air changes per hour of the operating room's gross volume whilst still leaving the supply AHU operating at full speed;
- a facility to turn off the entire system, the supply AHU and the UCV terminal (an emergency stop is not required);
- a read-out sufficiently large to be clearly visible from the operating table that shows the temperature of the air being supplied by the UCV terminal;
- a read-out sufficiently large to be clearly visible from the operating table that shows the relative humidity of the air being supplied by the UCV terminal;
- a red indicator light that shall illuminate when either the supply AHU or the UCV terminal fails; either or both are switched off or the AHU and UCV terminal are at set -back;
- an amber indicator light that shall illuminate when the UCV terminal is at set-back and the supply AHU is running;
- a green indicator light that shall illuminate when both the supply AHU and UCV terminals are operating at full speed;
- a blue indicator light that shall illuminate when the UCV terminal's HEPA-filter resistance causes the air delivered to fall below 80% of the design flow rate.
- Performance:
  - Mixed flow applications: To BS EN 12238.
  - Sound power levels: To BS EN ISO 5135.
- Performance requirement to SHTM.
- Material: Stainless steel.

325 AIR TRANSFER GRILLES

Transfer grilles shall be non-vision type and sized for a maximum face velocity of 1.5 m/s.

- Grille type: Non-vision.
- Accessories: Transfer grilles shall not be installed in a fire rated door/wall.
  Transfer grilles in operating theatres shall incorporate a volume control damper to allow adjustment to room pressure

330 DIFFUSERS

Ceiling diffusers shall be installed as shown on the drawings. The diffuser shall be a square ceiling diffuser for flush mounting, comprising diffuser face with mitred perimeter border.
Louvre face diffusers shall be of the four way pattern and shall have adjustable cores to provide horizontal or vertical distribution. The air pattern shall be achieved via the use of directional blanking plates within the body of the diffuser and shall not be visible from the diffuser face. The diffuser shall be suitable for incorporation in a standard ceiling tile grid

without overlapping the tile-supporting bar. Diffusers shall be complete with a security chain between the diffuser body and the core and an earth bonding tag.

Ceiling diffusers shall be suitable for direct replacement of 600 x 600 ceiling tiles or an overall size relative to the selected neck size for fitting within a cut tile.

Branches serving individual diffusers shall be provided with a manual volume control damper supplied and fitted by the ductwork sub-contractor, in addition to the grille damper where supplied. The duct mounted volume control damper shall be located as close as possible (within 1 duct diameter) of the take-off with the main branch duct.

Where extract is required via ceiling mounted devices louvre face diffusers shall be used. The diffusers shall be similar in construction and appearance to the supply diffusers.

The diffuser shall have fixed air control blades, central fixing screw with decorative cap and an opposed blade damper adjustable from the front face.

The plenum box shall be galvanised sheet metal with a rubber lip seal.

The plenum box shall have fixings for suspending the assembly from the ceiling slab.

The plenum boxes shall be suitable for side or top entry as required.

The diffuser face shall be extruded aluminium sections, natural anodised rear ancillaries in formed sheet steel, surfaces phosphate treated and stove-enamelled.

Supply and extract diffusers shall be at a distance from one another to prevent short circuiting. Supply diffusers shall be located away from one another to prevent two opposing air streams meeting and causing drafts, the individual velocities shall not be greater than 0.25 m/s.

- Performance:
  - Mixed flow applications: To BS EN 12238.
  - Sound power levels: To BS EN ISO 5135.

340 LAMINAR FLOW PANELS

Laminar flow panel diffusers shall be provided in operating theatres with a footprint that encompasses the operating site to produce a downward-displacement parallel-flow air distribuion.

Diffusers, of all patterns, to operating theatres shall achieve the required velocity at the operating table position of between 0.2 and 0.3 metres per second, and achieve good air distribution throughout the remainder of the room. Particular care shall be taken to ensure that in a heating mode air discharge velocity overcomes the bouyancy of the air to achieve the required velocity at the operating table position.

The ventilation distribution arrangement must take priority over the layout of luminaires and pendants, etc.

350 TOILET SUPPLY AND EXTRACT VALVES

Extract with toilets, bathrooms and showers shall be via exhaust air disc valves. Each valve shall be constructed from sheet steel and provided with a stove-enamelled finish. The centre disc valve core shall be mounted on a threaded adjustable centre spindle complete with locking nut to provide air volume flow rate adjustment.

The centre disc assembly shall be mounted in a profiled outer ring complete with an edge seal and tamperproof sub-frame.

Generally each valve shall be installed within a cut tile. Each valve shall not require a plenum but shall be connected into a section of rigid ductwork before any flexible is used.

Each branch connecting to individual valves shall be provided with a manual volume control damper fitted as close to the upstream branch connection as possible.

360 DIFFUSERS, LINEAR

Linear diffusers shall be installed as shown on drawings.

They shall be made from aluminium extrusion, natural anodised.

Diffusers shall come complete with end caps and air control blades.

The diffusers shall have a rear mounted plenum box fitted with a side entry spigot and suspension brackets to hang the complete assembly from the ceiling.

The plenum box shall be fitted with a volume control damper adjustable from the diffuser face and be made from galvanised sheet steel.

- Performance:
  - Mixed flow applications: To BS EN 12238.
  - Sound power levels: To BS EN ISO 5135.
- Diffuser: Slot.
- Material: Aluminium.
  - Finish: Anodized.

370 DIFFUSERS, SWIRL

The swirl diffusers shall be adjustable in square or circular face plates with swirling horizontal discharge of supply air with high induction.

Diffusers shall consist of a pressed front face with radially angled air discharge sections incorporating adjustable directional air control blades.

Diffusers shall be complete with a plenum box with circular top or side entry spigots and volume control damper. The Plenum box shall be supplied with fixed hanging brackets.

The face plate shall be galvanised sheet steel with the surfaces pre-treated and powder coated white (RAL 9010).

The control blades shall be made from Polystyrol coloured black or white as Architects specification.

The plenum box is made from galvanised sheet steel with a rubber lip seal.

The plenum box shall be galvanised sheet metal with a rubber lip seal.

The plenum box shall have fixings for suspending the assembly from the ceiling slab.

The plenum boxes shall be suitable for side or top entry.

Supply and extract diffusers shall be at a distance from one another to prevent short circuiting. Supply diffusers shall be located away from one another to prevent two opposing air streams meeting and causing drafts, the individual velocities shall not be greater than 0.25 m/s.

- Performance:
  - Mixed flow applications: To BS EN 12238.
  - Sound power levels: To BS EN ISO 5135.
- Material: Galvanized steel.
  - Finish: Epoxy resin powder/ hardener coating.

380 MEDICINEMA FLOOR DIFFUSERS

The Medicinema shall be served by floor mounted displacement diffusers.

The diffusers shall be as Krantz DB-E.

390 GRILLES

Grilles shall be installed as shown on the drawings.

The grilles shall be made from extruded aluminium sections. The finish shall be as Architects RAL number. Grilles shall be selected for quite operation.

Grilles, shall have corner mitres and rear perimeter sealing strip with profiled front blades.

Sub frames shall be used where required.

- Performance:
  - Mixed flow applications: To BS EN 12238.
  - Displacement flow applications: To BS EN 12239.
  - Sound power levels: To BS EN ISO 5135.

400 CEILING VENTING GRILLES (CVG)

Ceiling venting grilles shall be provided along the main distribution routes for medical gas and natural gas pipework.

Ceiling venting grilles shall be of similar construction and arrangement to the supply diffusers. The diffuser body only shall be provided for these items.

The minimum size of CVGs shall be 150 x 150mm.

410 PLENUM BOXES, CEILING OR WALL MOUNTED

Plenum boxes shall be made of 0.7mm Galvanised steel plenum.

Spigot construction shall be a top or side entry plenum option robustly fabricated plenums shall come complete with all necessary fixing angles for drop rod support.

- Duty: To match grille and diffuser.
- Configuration: Single plenum box or a series of plenum boxes butted together to form a continuous length.
- Construction: Sturdy and rigid with circular inlet spigots of 65 mm minimum length.
- Fixing: Incorporate means for fixing to, or suspending from, building or other construction.

EXECUTION

610 INSTALLATION

- General: Do not distort air terminal devices. Fix securely.
- Air leakage: Prevent. Seal joints with self adhesive foam strip or equivalent.
- Appearance: Finish visible edge joints neatly. Do not leave sharp edges and protruding screws.

620 FIXING CIRCULAR AND RECTANGULAR DIFFUSERS

- Method: As per manufacturers instructions and specification.

640 FIXING LINEAR AND SLOT DIFFUSERS

- Method: As per manufacturers instructions and specification.

650 FIXING FLOOR MOUNTED SWIRL DIFFUSERS

- General: Fit flush with finished floor.
- Method: As per manufacturers instructions and specification.

660 FIXING GRILLES

- Method: As per manufacturers instructions and specification.

670 OPERATION

- General: Fit so that moving parts operate correctly and removable cores can be taken out and replaced.
- High level and ceiling applications: On removable cores, provide safety wires with quick release ends.

680 BLANKING PLATES

- Location: Where needed to restrict projection of air flow from section of grille or diffuser.

APPENDIX A

SUPPORTING DOCUMENTATION

In order to carry out the design, the Sub-contractor shall require access at least to the documentation listed below.

The following information is, or shall be, available from the Contractor:-

1. Standard General Conditions and Preliminary Clauses
2. All ZBP Layout Drawings, Schematics, Specifications and Schedules
3. Nightingale Associates: Fire Strategy Drawings
4. Nightingale Associates: Building Plans
5. Nightingale Associates: Building Sections
6. Nightingale Associates: Wall Elevations
7. Nightingale Associates: Reflected ceiling plans
8. ZBP: Automatic Controls and Building Management System Specification : ZBP-XX-XX-SP-660-401 to 406
9. ZBP: Fire Detection and Alarm Specification : ZBP-XX-XX-SP-572-214
10. ITPD Documentation and Appendices

Drawings for other specialist systems shall be developed by other Sub-contractors during the detailed design period and shall be made available by the Contractor

NHS National Services Scotland

Draft for consultation

Scottish Health Technical Memorandum 03-01: Ventilation for healthcare premises

Part B: Operational management and performance verification

Health Facilities Scotland
Engineering and Environment

February 2009

Acknowledgements

Malcolm Thomas – Consulting Engineer – Lead Author

Principal contributors

Craig MacIntosh – Principal Clinical Scientist – Wirral Hospitals NHS Trust

Andy McGrath – BSRIA Instrument Solutions

Helen & Philip Sturdy – DSSR Consulting Engineers

Richard Gatley – Apreco

Russell Pitman – Henderson Green consultancy

Kevin Reynolds – Deputy Head of Estates – Sandwell and West Birmingham NHS Trust

Ian Fraser – Department of Health

Main Steering Group and Working Groups comprising representatives from:

Department of Health

Welsh Health Estates

Health Facilities Scotland

Health & Social Services, Northern Ireland

Health Protection Agency (HPA)

Building Research Establishment (BRE)

Building Services Research and Information Association (BSRIA)

University of Leeds

CIBSE Healthcare Group

IMechE/ASHRAE

IHEEM

HEFMA

Draft under Preparation

© Health Facilities Scotland, a Division of NHS National Services Scotland

BSI

Faber Maunsell consultancy

Couch Perry Wilkes consultancy

DSSR Consulting Engineers

Howarth Airtech

Medical Air Technology/Thermo Electric

BPG Medical

Admeco/Trumpf Medical Systems

Volkes SPX

Weiss Kilmatechnik

Sound Research Laboratories

NHS Security Management Service

Pennine Acute NHS Trust

Hospital Infection Society (HIS)

Central Sterilising Club

HEVAC – Air-handling Unit Manufactures Group

Draft under Preparation

© Health Facilities Scotland, a Division of NHS National Services Scotland

Health Facilities Scotland

NHS National Services Scotland

Contents

Page

Acknowledgements **2**

Contents **4**

Preface **7**

About Scottish Health Technical Memoranda 7
Structure of the Scottish Health Technical Memorandum suite 8

Executive summary **10**

Who should use this guidance? 10
Main recommendations 10

1. Introduction **11**

Ventilation in healthcare premises 11
Statutory requirements 11
Health and Safety at Work etc Act 1974 12
COSHH 12
Fire regulations 12
Plants installed in units manufacturing medicinal products 13
Plants installed in laboratories 13
Codes of practice and guidance 13
Management responsibilities – general 13
System information 14
Frequency of inspections and verifications 14
Implications of PPP/PFI Procurement 15

2. Functional responsibilities **16**

Management responsibilities 16
Designated staff functions 16
Management 16
Designated Person 16
Authorising Engineer (Ventilation) (AE(V)) 16
Authorised Person (Ventilation) (AP(V)) 17
Competent Person (Ventilation) (CP(V)) 17
Infection Control Officer 17
Plant Operator 17
User 17
Contractor 17
Records 18
Training 18

Draft Under Preparation

© Health Facilities Scotland, a Division of NHS National Services Scotland

A49618520

Specific health and safety aspects....18

3. Ventilation systems – minimum requirements....19

General requirements....19
Location and access....19
Basic requirements....20
AHU intakes and discharges....20
AHU drainage system....21
Dampers....21
Fan drives....22
Heater & Frost batteries....22
Cooling coils....22
Humidifiers....23
Filtration....23
High-efficiency filters – HEPA and ULPA....24
Energy recovery....24
Attenuation....24
Identification and labelling....24
Pressure stabilisers....25

4. Annual inspection and verification requirements....26

Ventilation systems inspection....26
Critical ventilation systems....26
Definition of a critical system....26
Annual verification....27
Fabric of the area served....27
Critical ventilation systems – verification standards....28
Vertical ultra-clean operating theatres....30
Horizontal ultra-clean operating theatres....31
Category 3 and 4 laboratories and rooms....31
Pharmacy aseptic suites....31
Sterile services department – inspection and packing rooms....32
LEV systems....32
Critical system verification failure....32

5. Inspection and maintenance....33

General....33
Inspection and maintenance of critical systems....33
AHU drainage....33
Filter changing....34
Changing extract filters containing hazardous substances....34
Ventilation system cleaning....35
Chilled beams....36
Split and cassette cooling units....36
Portable room cooling units....36
Self-contained mobile filter and/or ultraviolet (UV) light units....36
Inspection and maintenance records....37

Draft under Preparation

© Health Facilities Scotland, a Division of NHS National Services Scotland

A49618520

Appendix 1: Annual inspection of critical ventilation systems – AHU and plantroom equipment 38

Checklist 1

Annual inspection of critical ventilation systems – AHU and plantroom equipment 40

Appendix 2: Operating suite annual verification.....44

Checklist 2

Annual verification of theatre ventilation systems -Theatre suite information 46

References.....49

Draft for Preparation

Disclaimer

The contents of this document are provided by way of general guidance only at the time of its publication. Any party making any use thereof or placing any reliance thereon shall do so only upon exercise of that party's own judgement as to the adequacy of the contents in the particular circumstances of its use and application. No warranty is given as to the accuracy, relevance or completeness of the contents of this document and Health Facilities Scotland, a Division of NHS National Services Scotland, shall have no responsibility for any errors in or omissions therefrom, or any use made of, or reliance placed upon, any of the contents of this document.

© Health Facilities Scotland, a Division of NHS National Services Scotland

Preface

About Scottish Health Technical Memoranda

Scottish Engineering Health Technical Memoranda (SHTMs) give comprehensive advice and guidance on the design, installation and operation of specialised building and engineering technology used in the delivery of healthcare.

The focus of Scottish Health Technical Memorandum guidance remains on healthcare-specific elements of standards, policies and up-to-date established best practice. They are applicable to new and existing sites, and are for use at various stages during the whole building lifecycle.

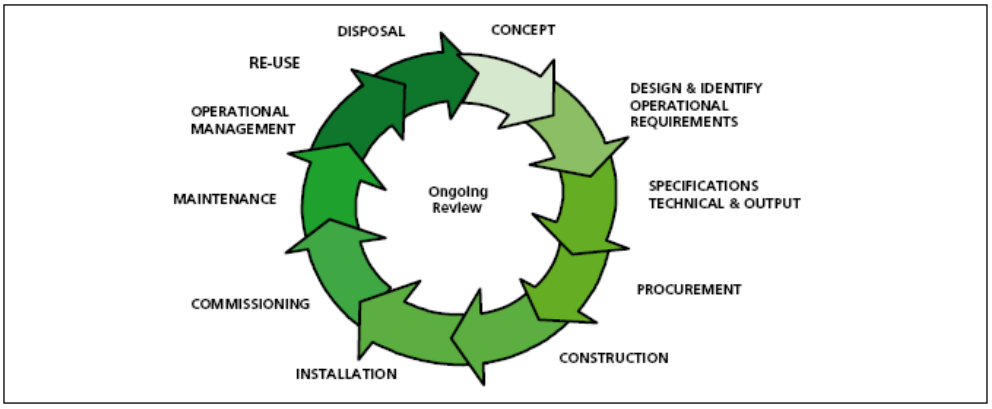

Figure 1: Healthcare building life-cycle

Healthcare providers have a duty of care to ensure that appropriate engineering governance arrangements are in place and are managed effectively. The Scottish Engineering Health Technical Memorandum series provides best practice engineering standards and policy to enable management of this duty of care.

It is not the intention within this suite of documents to unnecessarily repeat international or European standards, industry standards or UK Government legislation. Where appropriate, these will be referenced.

Healthcare-specific technical engineering guidance is a vital tool in the safe and efficient operation of healthcare facilities. Scottish Health Technical Memorandum guidance is the main source of specific healthcare-related guidance for estates and facilities professionals.

The core suite of nine subject areas provides access to guidance which:

- is more streamlined and accessible;

© Health Facilities Scotland, a Division of NHS National Services Scotland

Draft under consultation

- encapsulates the latest standards and best practice in healthcare engineering;
- provides a structured reference for healthcare engineering.

Structure of the Scottish Health Technical Memorandum suite

The series of engineering-specific guidance will ultimately contain a suite of nine core subjects pending a re-assessment of Firecode SHTMs 81-66.

Scottish Health Technical Memorandum 00: Policies and principles (applicable to all Health Technical Memoranda in this series)

Scottish Health Technical Memorandum 01: Decontamination

Scottish Health Technical Memorandum 02: Medical gases

Scottish Health Technical Memorandum 03: Heating and ventilation systems

Scottish Health Technical Memorandum 04: Water systems

Scottish Health Technical Memorandum 05: Reserved for future use.

Scottish Health Technical Memorandum 06: Electrical services

Scottish Health Technical Memorandum 07: Environment and sustainability

Scottish Health Technical Memorandum 08: Specialist services

Some subject areas may be further developed into topics shown as -01, -02 etc and further referenced into Parts A, B etc.

Example: Scottish Health Technical Memorandum 06-02 Part A will represent Electrical Services – Electrical safety guidance for low voltage systems.

In a similar way Scottish Health Technical Memorandum 07-02 will simply represent Environment and Sustainability - EnCO_2de.

All Scottish Health Technical Memoranda are supported by the initial document Scottish Health Technical Memorandum 00 which embraces the management and operational policies from previous documents and explores risk management issues.

Some variation in style and structure is reflected by the topic and approach of the different review working groups.

Draft under Preparation

© Health Facilities Scotland, a Division of NHS National Services Scotland

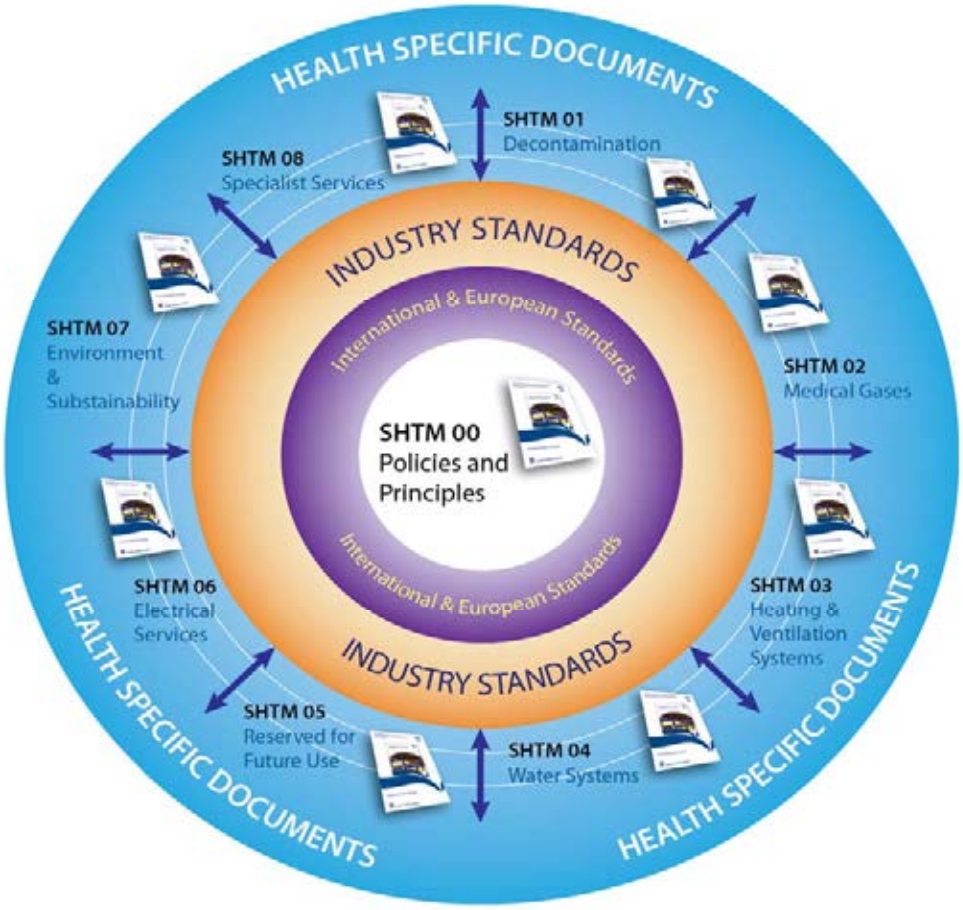

Figure 2: Engineering guidance

Draft under

© Health Facilities Scotland, a Division of NHS National Services Scotland

Executive summary

Scottish Health Technical Memorandum 03-01: 'Ventilation in healthcare premises' is published in two parts. Part A deals with the design and installation of ventilation systems; Part B covers operational management.

The document gives comprehensive advice and guidance on the legal requirements, design implications, maintenance and operation of specialised ventilation in all types of healthcare premises.

The guidance contained in this Scottish Health Technical Memorandum applies to new installations and major refurbishments of existing installations.

Scottish Health Technical Memorandum 03-01 supersedes all previous versions of Scottish Health Technical Memorandum 2025: 'Ventilation in healthcare premises'.

Who should use this guidance?

This document is aimed at healthcare management, estates managers and operations managers.

Main recommendations

- all ventilation plant should meet a minimum requirement in terms of the control of *Legionella* and safe access for inspection and maintenance;
- all ventilation plant should be inspected annually;
- the performance of all critical ventilation systems (such as those servicing operating suites) should be verified annually.

Draft under Preparation

© Health Facilities Scotland, a Division of NHS National Services Scotland

1. Introduction

1.1 Scottish Health Technical Memorandum 03-01: 'Specialised ventilation in healthcare premises' is published in two parts. Part A deals with operation of general and specialised ventilation; Part B covers operational management.

1.2 The document gives comprehensive advice and guidance to healthcare management, design engineers, estates managers and operations managers on the legal requirements, design implications, maintenance and operation of specialised ventilation in all types of healthcare premises.

1.3 The guidance contained in this Scottish Health Technical Memorandum applies to new installations and major refurbishments of existing installations.

1.4 Scottish Health Technical Memorandum 03-01 supersedes all previous versions of Scottish Health Technical Memorandum 2025: 'Ventilation in healthcare premises'.

Ventilation in healthcare premises

1.5 Ventilation is used extensively in all types of healthcare premises to provide a safe and comfortable environment for patients and staff. More specialised ventilation is provided in areas such as operating departments, critical care areas and isolation facilities for primary patient treatment.

1.6 It is also installed:

- to ensure compliance with the quality assurance requirements of items processed in pharmacies and sterile services departments;
- to protect staff from harmful organisms and toxic substances (for example in laboratories).

Statutory requirements

1.7 Increased health risks to patients will occur if ventilation systems do not achieve and maintain the required standards. The link between surgical site infection and theatre air quality has been well established.

If the ventilation plant has been installed to dilute or contain harmful substances, its failure may expose people to unacceptable levels of contamination. Proven breaches of the statutory requirements can result in prosecution and may also give rise to a civil suit against the operators.

Draft Under Preparation

© Health Facilities Scotland, a Division of NHS National Services Scotland

Health and Safety at Work etc Act 1974

1.8 The Health and Safety at Work etc Act 1974 is the core legislation that applies to ventilation installations. As these installations are intended to prevent contamination, closely control the environment, dilute contaminants or contain hazards, their very presence indicates that potential risks to health have been identified.

COSHH

1.9 The Control of Substances Hazardous to Health (COSHH) Regulations 2002 place upon management an obligation to ensure that suitable measures are in place to protect their staff and others affected by the work activity. These methods may include both safe systems of work and the provision of a specialised ventilation system. In laboratories the requirements are often met by the provision of fume cupboards and microbiological safety cabinets.

1.10 Where specialised ventilation plant is provided as part of the protection measures, there is a statutory requirement that it be correctly designed, installed, commissioned, operated and maintained. The local exhaust ventilation (LEV) section of COSHH requires that the system be examined and tested at least every 14 months by a competent person and that management maintain comprehensive records of its performance, repair and maintenance.

1.11 Certain substances have workplace exposure limits (WELs) set out in the Health and Safety Executive's Guidance Note EH40 – 'Workplace exposure limits: containing the list of workplace exposure limits for use with the Control of Substances Hazardous to Health Regulations 2002 (as amended)'. If specialised ventilation systems are provided in order to achieve these standards, they will be subject to the COSHH Regulations as above.

Fire regulations

1.12 The Fire Regulations require that if ventilation ductwork penetrates the fabric of a building, it should be designed and installed so as to contain the spread of fire (see Firecode: SHTM 81: 'Fire Precautions in New Hospitals, Version 3' and the requirements of the Scottish Technical Handbooks, Non-Domestic, Section 2: Fire).

1.13 It is management's responsibility to ensure that the standards applied during the design and installation are not reduced during the subsequent operation and maintenance of the equipment.

Draft Under Preparation

© Health Facilities Scotland, a Division of NHS National Services Scotland

Plants installed in units manufacturing medicinal products

1.14 Plants installed in units manufacturing medicinal products to the standards set out in the current European guide to good manufacturing practice (http://ec.europa.eu/enterprise/pharmaceuticals/ eudralex/homev4.htm) may also be subject to particular legislation with regard to their operation and maintenance.

1.15 There are specific requirements under the Medicines Act 1968 to maintain accurate records of plant performance, room conditions and maintenance events. Such records would need to be preserved for up to 35 years as part of a quality assurance audit trail.

Plants installed in laboratories

1.16 Specialised ventilation plants installed in laboratories dealing with research, development or testing, whether involving drugs, animals or genetically modified organisms, may be subject to particular legislation with regard to their operation in addition to that mentioned above.

Codes of practice and guidance

1.17 All ventilation systems should conform to the principles set out in the Health and Safety Commission's Approved Code of Practice and guidance document 'Legionnaires' disease: the control of *Legionella* bacteria in water systems' (commonly known as L8), and Scottish Health Technical Memorandum 04-01: 'The control of *Legionella*, hygiene, 'safe' hot water, cold water and drinking water systems'.

1.18 Scottish Health Facilities Note 30: 'Infection Control in the Built Environment, Design and planning' guides and stimulates thinking on the planning of and execution of new construction and refurbishment works in all types of healthcare facilities. Ventilation systems (covered in this guidance) play an important role in reducing the risk of Healthcare Associated Infection.

Management responsibilities – general

1.19 It is a management responsibility to ensure that inspection, service and maintenance activities are carried out safely without hazard to staff, patients or members of the public.

1.20 Those required to monitor and/or maintain ventilation equipment will need to show that they are competent to do so (see Section 2).

1.21 Maintenance procedures should be reviewed periodically to ensure that they remain appropriate.

Draft Under Preparation

© Health Facilities Scotland, a Division of NHS National Services Scotland

System information

1.22 When new ventilation systems are accepted for use, full information as to their designed mode of operation together with recommended maintenance procedures should be provided as part of the handover procedure.

1.23 In many existing systems, original design and commissioning information will not be available. It will therefore be necessary to determine a suitable level of system performance based on the function, purpose and age of the installation.

1.24 Part A of this Scottish Health Technical Memorandum gives design parameters for new installations.

1.25 Section 3 of this document sets out the minimum standards for all air-handling units (AHUs) and their air distribution systems.

1.26 Ventilation system records and logbooks should be kept of the commissioning information, operational management routine, monitoring and maintenance. The Health and Safety Executive and other interested bodies have a statutory right to inspect them at any time. All records should be kept for at least five years.

Note	In the event of a reportable incident connected with ventilation equipment or the area that it serves; all records and plant logbooks will need to be collected as evidence.

1.27 A set of specimen maintenance checklists is given in Appendix 1.

Frequency of inspections and verifications

1.28 All ventilation systems should be subject to, at least, a simple visual inspection annually.

1.29 Ventilation systems serving critical care areas should be inspected quarterly and their performance measured and verified annually. The quarterly inspection should be a simple visual check; the annual verification will be a more detailed inspection of the system together with the measurement of its actual performance.

1.30 The LEV section of the COSHH regulations contains a statutory requirement that systems installed to contain or control hazardous substances be examined and tested at least every 14 months by a competent person.

1.31 Regular tests, at intervals agreed with the local fire prevention officer, will need to be carried out in order to demonstrate the continuing efficiency of the fire detection and containment systems. These may be in addition to the inspections detailed above. Records of these tests should be kept.

Draft under Preparation

© Health Facilities Scotland, a Division of NHS National Services Scotland

Implications of PPP/PFI Procurement

1.32 While the ultimate responsibilities as set out in this SHTM in terms of overall management remain with Health Boards, when a new or recent hospital has been procured via the Public-Private Partnership (PPP) or Private Finance Initiative (PFI) routes, there are changes in the chain of responsibilities.

1.33 More often than not, the operator of the facility will subcontract or enter into partnership with a Facilities Management (FM) Provider who will maintain and operate mechanical and electrical installations, including ventilation systems. It is not unknown for the FM provider to be the Health Board's own estates staff. Whichever organisation carries out the functions set out in this SHTM, it will be necessary for the same practice and procedures to be carried out, records maintained and reports prepared to maintain an audit trail. These have to be submitted to the Health Board for which the hospital has been established. The Health Board will retain in-house estates staff and/or technical advisers to monitor these records and reports, having the right to comment where performance standards are not being achieved, inspect installations, and seek to ensure that remedial measures are put in hand and monitored as to their effect.

In the event that a civil suit is served on a Health Board, they would seek redress from the operator of the Hospital, where appropriate.

1.34 Issues related to control of infection where mechanical ventilation systems are implicated will be the remit of the Health Board's control of teams set up for the purpose and representation should be arranged for estates staff or the FM Provider so that any remedial action agreed can be can be set in motion without delay.

Draft under Preparation

© Health Facilities Scotland, a Division of NHS National Services Scotland

2. Functional responsibilities

Management responsibilities

2.1 Clear lines of managerial responsibility should be in place so that no doubt exists as to who is responsible for the safe operation and maintenance of the equipment.

2.2 A periodic review of management systems should take place in order to ensure that the agreed standards are being maintained.

2.3 Those required to inspect, verify or maintain ventilation equipment will need to show that they are competent to do so. As a minimum they should have sufficient knowledge of its correct operation to be able to recognise faults.

2.4 It is anticipated that training in the validation and verification of specialised healthcare ventilation systems for Authorised Persons and Competent Persons will become available during the life of this Scottish Health Technical Memorandum.

Designated staff functions

2.5 A person intending to fulfil any of the staff functions specified below should be able to prove that they possess sufficient skills, knowledge and experience to be able to safely perform the designated tasks.

Management

2.6 Management is defined as the owner, occupier, employer, general manager, chief executive or other person who is ultimately accountable for the safe operation of premises.

Designated Person

2.7 This person provides the essential senior management link between the organisation and professional support. The Designated Person should also provide an informed position at board level.

Authorising Engineer (Ventilation) (AE(V))

2.8 The AE(V) is defined as a person designated by Management to provide independent auditing and advice on ventilation systems and to review and witness documentation on validation.

Draft under Preparation

© Health Facilities Scotland, a Division of NHS National Services Scotland

Authorised Person (Ventilation) (AP(V))

2.9 The AP(V) will be an individual possessing adequate technical knowledge and having received appropriate training, appointed in writing by the Designated Person (in conjunction with the advice provided by the AE(V)), who is responsible for the practical implementation and operation of Management's safety policy and procedures relating to the engineering aspects of ventilation systems.

Competent Person (Ventilation) (CP(V))

2.10 The CP(V) is defined as a person designated by Management to carry out maintenance, validation and periodic testing of ventilation systems.

Infection Control Officer

2.11 The Infection Control Officer (or consultant microbiologist if not the same person) is the person nominated by management to advise on monitoring the infection control policy and microbiological performance of the systems.

2.12 Major policy decisions should be made through an infection control committee. The infection control committee should include representatives of the user department and estates and facilities or their nominated representative (that is, the Authorised Person).

Plant Operator

2.13 The Plant Operator is any person who operates a ventilation installation.

User

2.14 The User is the person responsible for the management of the unit in which the ventilation system is installed (for example head of department, operating theatre manager, head of laboratory, production pharmacist, head of research or other responsible person).

Contractor

2.15 The Contractor is the person or organisation responsible for the supply of the ventilation equipment, its installation, commissioning or validation. This person may be a representative of a specialist ventilation organisation or a member of the general manager/chief executive's staff.

Draft under Preparation

© Health Facilities Scotland, a Division of NHS National Services Scotland

Records

2.16 A record should be kept of those appointed to carry out the functions listed above. The record should clearly state the extent of the postholder's duties and responsibilities, and to whom they are to report.

2.17 Substitute or replacement staff should be designated in order to cover for sickness, holidays and staff transfers.

Training

2.18 Routine inspection and maintenance procedures can cause risks to the health of staff carrying out the work and those receiving air from the plant. All those involved should be made aware of the risks, and safe systems of work should be agreed. Suitable safety equipment should be provided as necessary, and training in its use should be given.

2.19 Any training given should be recorded, together with the date of delivery and topics covered.

2.20 Training in the use of safety equipment and a safe system of work will need to be repeated periodically in order to cater for changes in staff.

Specific health and safety aspects

2.21 Staff engaged in the service and maintenance of extract ventilation systems from pathology departments, mortuaries, laboratories, source- protective isolation facilities and other areas containing a chemical, biological or radiation hazard may be particularly at risk. In these cases, the risk should be identified and assessed.

2.22 The means by which the system can be rendered safe to work on should be determined, and a permit-to-work on the system implemented.

2.23 Training in the exact procedures should be given to all staff involved.

2.24 Some healthcare facilities may contain specialised units that are subject to access restrictions (for example pharmacy aseptic suites). Estates or contract staff requiring access may need additional training or to be accompanied when entering the unit.

Note: See also the following guidance published by the Health and Safety Commission's Health Services Advisory Committee:
- 'Safe working and the prevention of infection in clinical laboratories and similar facilities';
- 'The management, design and operation of microbiological containment laboratories';
- 'Safe working and prevention of infection in the mortuary and post-mortem room'.

Draft under Preparation

© Health Facilities Scotland, a Division of NHS National Services Scotland

3. Ventilation systems – minimum requirements

General requirements

3.1 All ventilation systems should be inspected annually to ensure conformity with minimum requirements, which are designed to:

- ensure safe access when carrying out routine service and maintenance activities;
- prevent or control risks associated with *Legionella* and other potential hazardous organisms;
- check that the system remains fit for purpose;
- maintain records of outcomes.

3.2 Every effort should be made to ensure that all AHUs achieve the minimum requirement set out below.

Location and access

3.3 AHUs should be secured from unauthorised access.

3.4 Units located on roofs must have a safe and permanent means of access. Suitable precautions must be in place to prevent personnel or equipment from falling during maintenance activities.

3.5 Units located outside at ground level should be secured within a compound to prevent unauthorised access. Vehicles should be excluded from the vicinity to ensure that exhaust fumes will not be drawn into intakes.

3.6 All parts of the AHU should be easily and safely accessible for routine inspection and service.

3.7 The area around an AHU within a building should be tanked to prevent water penetration to adjacent areas, and should be adequately drained.

3.8 Fire precautions should be in accordance with Firecode.

3.9 Combustion equipment must not be located in a fire compartment that houses air-handling equipment.

3.10 Plantrooms that house AHUs must not be used for general storage. Care should be taken to ensure that combustible material is not kept in the plantroom.

Draft Under Preparation

© Health Facilities Scotland, a Division of NHS National Services Scotland

Basic requirements

3.11 The plant must not contain any material or substance that could support the growth of microorganisms.

3.12 The plant must not contain any material or substance that could cause or support combustion.

3.13 Access to items that require routine service, such as filters, coils and chiller batteries, should be via hinged doors.

3.14 Items requiring infrequent access such as attenuators may be via clipped or bolted-on lift-off panels.

3.15 All doors and panels should be close-fitting and without leaks.

3.16 Every effort should be made to ensure that access is via fixed ladders and platforms or pulpit-style movable steps.

3.17 Electrical and mechanical services should not restrict or impede access to those parts of the AHU that require inspection.

3.18 Viewing ports and internal illumination should be fitted in order to inspect filters and drainage trays.

3.19 Internal illumination should be provided by fittings to at least IP55 rating. Fittings should be positioned so that they provide both illumination for inspection and task lighting.

3.20 A single switch should operate all of the lights in a unit.

AHU intakes and discharges

3.21 Intake and discharge points should not be situated where they will cause vitiated air to be drawn into a system (see paragraphs 3.61-3.70) in Part A, which give detailed information). In existing systems, it may be necessary to extend the intake or discharge point to a suitable position.

3.22 Each intake and discharge point should be fitted with corrosion-resistant weatherproof louvres or cowls to protect the system from driving rain. The inside of the louvres should be fitted with a mesh of not less than 6mm and not more than 12mm to prevent infestation by vermin and prevent leaves being drawn in.

3.23 The duct behind a louvre should be self-draining. If this is not practicable, it should be tanked and provided with a drainage system. Cleaning access must be provided either from the outside via hinged louvres or by access doors in the plenum behind the louvre. Where a common plenum is provided, cleaning access should be via a walk-in door.

Draft under Preparation

© Health Facilities Scotland, a Division of NHS National Services Scotland

AHU drainage system

3.24 All items of plant that could produce moisture must be provided with a drainage system. The system will comprise a drip-tray, glass trap, air break and associated drainage pipework.

3.25 Some existing units may not have been mounted far enough above the floor to permit the correct installation of a drainage system. If the AHU cannot be raised to an adequate height, an alternative arrangement (such as a pump-out system) must be provided.

3.26 The drip-tray should be constructed of a corrosion- resistant material (stainless steel is preferred) and be so arranged that it will completely drain. To prevent 'pooling', it is essential that the drain connection should not have an up-stand and that a slope of approximately 1 in 20 in all directions should be incorporated to the drain outlet position. The tray must be completely accessible or, for smaller units, easily removable for inspection and cleaning.

3.27 Each drip-tray should be provided with its own drain trap. The drain trap should be of the clear (borosilicate) glass type. This permits the colour of the water seal to be observed, thus giving an early indication of corrosion, biological activity or contamination within the duct (Part A, Section 4, paragraphs 4.20-4.25 refer and paragraph 3.29 of this Part B).

3.28 The trap should have a means for filling and should incorporate couplings to facilitate removal for cleaning. It should be located in an easily visible position where it will not be subject to casual knocks. The pipework connecting it to the drainage tray should have a continuous fall of not less than 1 in 20.

3.29 Traps fitted to plant located outside or in unheated plantrooms may need to be trace-heated in winter. The trace heating should be checked for operation and must not raise the temperature of water in the trap above 5°C.

3.30 Water from each trap must discharge via a clear air gap of at least 15mm above the unrestricted spill-over level of either an open tundish connected to a drainage stack via a second trap, or a floor gully (or channel). A support should be provided to ensure that the air gap cannot be reduced. More than one drain trap may discharge into the tundish, providing each has its own air break.

3.31 Drainage pipework may be thermoplastic, copper or stainless steel. Glass should not be used. The pipework should be a minimum diameter of 22mm and have a fall of at least 1 in 60 in the direction of flow. It should be well supported, and located so as not to inhibit access to the AHU.

Dampers

3.32 AHUs serving critical areas and those areas that are shut down out of hours should be fitted with motorised low-leak shut-off dampers located immediately behind the intake and discharge of each supply and extract system.

Draft, under Preparation

© Health Facilities Scotland, a Division of NHS National Services Scotland

Fan drives

3.33 Fan-drive trains, whether supply or extract, should be easily visible without the need to remove access covers. Protecting the drive train with a mesh guard is the preferred option. For weatherproof units designed to be located outside, the fan drive should be enclosed. It should be easily visible through a viewing port with internal illumination and be accessed via a lockable, hinged door.

3.34 The motor windings of induction-drive 'plug' motor arrangements and in-line axial fans having a pod motor within the air stream must be protected from over-temperature by a thermistor and lock-out relay.

3.35 It is necessary to ensure that – should the computer control system or its software develop a fault – the fan can be switched to a direct start with fixed speed and manual operation. This is particularly important for critical care systems serving operating suites, high dependency care units of any type, isolation facilities, laboratories and pharmaceutical production suites.

Heater & Frost batteries

3.36 Access for cleaning must be provided to both sides of frost batteries and heater-batteries.

3.37 Where auxiliary wet heater-batteries are located in false ceilings, they should be fitted with a catch tray and leak alarm. The catch tray should be installed under both the battery and the control valve assembly to protect the ceiling from leaks. A moisture sensor and alarm should be fitted in the tray. Placing wet heater batteries in ceiling voids should be avoided if at all possible.

Cooling coils

3.38 All cooling coils – whether within the AHU or within a branch duct – must be fitted with their own independent drainage system as specified above. A baffle or similar device must be provided in the drip-tray to prevent air bypassing the coil, and the tray should be large enough to capture the moisture from the eliminator, bends and headers.

3.39 The cooling-coil control valve should close upon selection of low speed, system shut-down, low air flow or fan failure.

3.40 Where auxiliary wet-cooling coils are located in false ceilings, they should be fitted with a catch tray and leak alarm. The catch tray should be installed under both the battery and the control valve assembly to protect the ceiling from leaks. A moisture sensor and alarm should be fitted in the tray.

Draft under Preparation

© Health Facilities Scotland, a Division of NHS National Services Scotland

Humidifiers

3.41 Humidifiers are not generally required. Where they are fitted, but have been out of use for a significant period of time, they should be removed. All associated pipework should also be removed back to its junction with the running main.

3.42 Where humidifiers are fitted and their use is still required, they should fully conform to the installation standard set out in Section 4 of Part A.

3.43 The section of ductwork containing the humidifier may need to be periodically decontaminated. Hinged access doors with viewing ports and internal illumination should be provided.

3.44 All humidifiers must be fitted with their own independent drainage system as detailed above.

3.45 Only steam-injection humidifiers, whether mains fed or locally generated, are suitable for use in air-conditioning systems within healthcare facilities. Water humidifiers, if fitted, should be removed.

3.46 Self- and locally-generated steam humidifiers must be supplied with potable water. The installation should be capable of being isolated, drained and cleaned. Section 4 in Part A of this Scottish Health Technical Memorandum gives further details.

3.47 Some steam generators are of a type that requires regular cleaning and descaling. The installation should enable them to be physically isolated from the air duct in order to prevent contamination of the air supply by cleaning agents.

3.48 The humidifier control system should fully conform to the standard set out in Sections 4 and 6 of Part A.

Filtration

3.49 Filters must be securely housed and sealed in well-fitting frames that minimise air bypass. Air bypass significantly reduces filter efficiency; the higher the filter grade, the greater the effect. Mounting frames should be designed so that the air flow pushes the filter into its housing to help minimise air bypass.

3.50 All filters should be of the dry type. Panel filters are generally used as prefilters and should be positioned on the inlet side of the supply fan, downstream of the frost battery. Where required, secondary filters (these will be bags or pleated paper) should be on the positive-pressure side of the fan.

3.51 The filter installation should provide easy access to filter media for cleaning, removal or replacement; therefore, a hinged access door should be provided. The upstream side of the filter should be visible for inspection through a viewing port with internal illumination.

Draft under Preparation

© Health Facilities Scotland, a Division of NHS National Services Scotland

3.52 All filters should be provided with a means of checking the differential pressure across them. Direct-reading dial-type gauges marked with clean and dirty sectors are preferred.

High-efficiency filters – HEPA and ULPA

3.53 Where fitted, HEPA filters should be of the replaceable-panel type with leak-proof seals. Their installation should permit the validation of the filter and its housing.

3.54 HEPA filters are sometimes used in extract systems for the containment of hazardous substances or organisms. They may be fitted with prefilters to extend their service life.

3.55 When used for the containment of hazardous substances, the installation should incorporate design provision for the subsequent safe removal and handling of contaminated filters by maintenance staff.

Energy recovery

3.56 Energy recovery, where fitted, will require cleaning access to both sides of the device.

3.57 Whichever type of energy recovery device is fitted, the extract side should be protected by a G3 filter and provided with a drainage system to remove condensate.

3.58 The heat-recovery device should be controlled in sequence with the main heater-battery, and may need to incorporate a control to prevent the transfer of unwanted heat when the air-on condition rises above the plant's required set-point.

Attenuation

3.59 Cleaning access should be provided at both ends of any attenuator unit.

Identification and labelling

3.60 All supply and extract ventilation systems should be clearly labelled. The label should identify both the AHU and the area that it serves. The lettering should be at least 50mm high and be mounted in an easily visible place near the fan of the unit. Any subsystems and the principal branch ducts should be similarly labelled.

3.61 The direction of airflow should be clearly marked on all main and branch ducts.

3.62 All airflow test-points should be clearly identified, and the size of the duct given.

Draft under Preparation

© Health Facilities Scotland, a Division of NHS National Services Scotland

Pressure stabilisers

3.63 Pressure stabilisers should be unobstructed and silent in operation.

Draft under Preparation

© Health Facilities Scotland, a Division of NHS National Services Scotland

4. Annual inspection and verification requirements

Ventilation systems inspection

4.1 All ventilation systems should be subject to at least a simple visual inspection annually.

4.2 The purpose of the inspection is to establish that:

- the system is still required;
- the AHU conforms to the minimum standard (see Section 3);
- the fire containment has not been breached;
- the general condition of the system is adequate for purpose;
- the system overall is operating in a satisfactory manner.

4.3 It is recommended that a simple check sheet be used to record the result of the inspection. Examples are given in Appendices 1 and 2.

Critical ventilation systems

4.4 All critical ventilation systems should be inspected quarterly and verified at least annually. In some circumstances the verification may need to be carried out more frequently.

4.5 The quarterly inspection should be as detailed in paragraphs 4.1 – 4.3.

4.6 The purpose of the annual verification will be to ensure additionally that the system:

- achieves minimum standards specific to the application;
- is operating to an acceptable performance level;
- remains fit for purpose.

Definition of a critical system

4.7 Ventilation systems serving the following are considered critical:

- operating theatres of any type, including rooms used for investigations (for example catheter laboratories);
- patient isolation facility of any type;
- critical care, intensive treatment or high-dependency unit;
- neonatal unit;

Draft under Preparation

© Health Facilities Scotland, a Division of NHS National Services Scotland

- category 3 or 4 laboratory or room;
- pharmacy aseptic suite;
- inspection and packing room in a sterile services department;
- MRI, CAT and other types of emerging imaging technologies that require particularly stable environmental conditions to remain within calibration;
- any system classified as an LEV system under the COSHH Regulations;
- any other system that clearly meets the definition.

4.8 The loss of service from such a system would seriously degrade the ability of the premises to deliver optimal healthcare.

Annual verification

4.9 The annual verification is intended to establish that:

- the system is still required;
- the AHU conforms to the minimum standard (see Section 3);
- the fire containment has not been breached;
- the general condition of the ventilation system is adequate;
- the fabric of the area served is satisfactory;
- the system performance is adequate with respect to the functional requirement – this will require:
  - a full measure of the supply and extract air-flow rates;
  - the calculation of room air-change rates if applicable;
  - the measurement of room differential pressures if applicable;
  - the measurement of room noise levels;
  - air-quality checks if appropriate;
  - a check on the control functions.

4.10 An assessment should then be made as to whether the system overall is fit for purpose and operating in a satisfactory manner.

Fabric of the area served

4.11 The building elements in the room or rooms served by a critical ventilation system should also be suitable for the function. As an example, in a suite of rooms comprising an operating theatre complex, the following elements should be checked:

Draft under Preparation

© Health Facilities Scotland, a Division of NHS National Services Scotland

- the ceiling should be complete and, if tiled, all tiles should be clipped down and sealed;
- the walls and floors should be free from significant construction and finish defects;
- windows and their trickle vents should be sealed and locked shut;
- the doors should close completely and the door closers should be correctly adjusted to hold them against the room pressure;
- all service penetrations and access panels should be sealed to prevent uncontrolled air flow between rooms and service voids;
- steps should have been taken (if necessary) to prevent portable equipment and stock items from obstructing low-level supply, transfer or extract air-flow paths.

4.12 Failure to achieve a suitable standard will render even the most sophisticated ventilation system ineffective.

4.13 All fire dampers should be tested as part of the annual verification.

4.14 LEV systems will be subject to an examination and test by a competent person at least every 14 months.

4.15 Table 1 below provides a model for the verification of critical ventilation systems.

Critical ventilation systems – verification standards

4.16 Unless otherwise specified below, the ventilation system should achieve not less than 75% of the design air-change rate given in Appendix 1 of Part A, or its original design parameters.

4.17 The pressure regime should achieve not less than 75% of the design value given in Appendix 1 of Part A, or its original design parameters; and the pressure gradient relationships with regards to surrounding areas must be maintained.

4.18 The sound levels given in Table 2 below are maximum permissible levels and should not be exceeded. Measurements should be made using at least a Type 2 sound meter fitted with a muff. Its accuracy should be checked using a calibration sound source before use.

Draft under Preparation

© Health Facilities Scotland, a Division of NHS National Services Scotland

Table 1: Operational management and routine verification process model

Step	Question	Information/standard required	Comment
1	Is the system still required?	Why was it installed?	Is that function still required?
2	Does the AHU achieve the minimum standard?	• Health and safety aspects • Intake/discharge positions • Inspection access • *Legionella* control and drainage • Fire and electrical safety • Leaks, cleanliness and insulation • Filtration	Inspect to ascertain compliance with minimum standards set out in Section 3 Part B of this SHTM
3	Is the air distribution system satisfactory?	• Access • Fire dampers • Cleanliness • Insulation • Identification • Room terminals • Pressure stabilisers	Inspect to ascertain continued fitness for purpose
Step	**Question**	**Information/standard required**	**Comment**
4	Does the measured system performance still accord with the design intent and achieve a minimum acceptable standard?	• Design air velocities • Design air-flow rates • Room air-change rates • Pressure differentials • Noise levels • Air quality	Establish the design values Measure the system output to verify its performance
5	Does the control system function correctly?	• Desired environmental conditions • Control sequence logic	Establish the design requirement Inspect/test to verify performance

Draft under Preparation

© Health Facilities Scotland, a Division of NHS National Services Scotland

		• Run; set back, off philosophy	
6	Having regard to the foregoing, is the system 'fit for purpose' and will it only require routine maintenance in order to remain so until the next scheduled verification?		Yes or No
7	What routine service and maintenance will be required for the system to remain fit for purpose and function correctly until the next scheduled verification?	• Filter changes • System cleaning • Performance indication • Performance monitoring • Performance measurement	Decide inspection frequency and maintenance schedule

Table 2: Maximum sound levels (service noise only)

Location	Design sound level (NR)	Measured sound level (dB(A))
Ultra-clean operating room	50	55
Conventional operating room	40	45
All other non-specified rooms	40	45
Corridors	40	45
Recovery room	35	40
Ward areas, sleeping areas	30	35

Vertical ultra-clean operating theatres

4.19 The following additional measurements should be taken:

- the average air velocity at the 2m level under the canopy: it should achieve a minimum average of 0.38m/s for a partial wall system and 0.3m/s for a full wall system;
- the air velocity within the inner zone at the 1m level: every reading should achieve a minimum velocity of 0.2m/s.

4.20 The air velocity measurements are to be taken using the equipment, test grid and method set out in Section 8 of Part A.

Note: There is no requirement to carry out filter scanning or entrainment tests at the annual verification unless the HEPA filters or recirculating air fans are changed, or the system is in some other significant way disturbed or altered. Changing the filters in the AHU or recirculating air filters does not constitute a significant disturbance to the ultra-clean ventilation (UCV) unit.

Draft Under Preparation

© Health Facilities Scotland, a Division of NHS National Services Scotland

4.21 Should the UCV terminal fail to achieve a suitable standard, resulting in the need to disturb or replace the HEPA filters or recirculating air fans, the unit should be revalidated using the procedure given in Section 8 of Part A.

Note: Scottish Health Technical Memorandum 08-01 gives detailed guidance on acoustics and the measurement of sound

Horizontal ultra-clean operating theatres

4.22 The following additional measurements should be taken:

- the discharge velocity test at 1m, 1.5m and 2m in front of the terminal: the average velocity should be not less than 0.4m/s.

4.23 The measurements are to be taken using the equipment, test grid and method set out in Section 8 of Part A.

Note: There is no requirement to carry out filter scanning at the annual verification unless the HEPA filters or recirculating air fans are changed; or the system is in some other significant way disturbed or altered. Changing the filters in the AHU or recirculating air filters does not constitute a significant disturbance to the UCV unit.

4.24 Should the UCV terminal fail to achieve a suitable standard, resulting in the need to disturb or replace the HEPA filters or recirculating air fans, the unit should be revalidated using the procedure given in Section 8 of Part A.

Category 3 and 4 laboratories and rooms

4.25 These areas should conform to the requirements of current information published by the Advisory Committee on Dangerous Pathogens and the Health and Safety Executive:

- 'The management, design and operation of microbiological containment laboratories';
- 'Biological agents: managing the risks in laboratories and healthcare premises'; and
- 'Biological agents: the principles, design and operation of Containment Level 4 facilities'.

Pharmacy aseptic suites

4.26 Pharmacy aseptic suites should conform to the requirements of the European guide to good manufacturing practice

Draft under Preparation

© Health Facilities Scotland, a Division of NHS National Services Scotland

(http://ec.europa.eu/enterprise/pharmaceuticals/eudralex/homev4.htm) and the requirements of the Medicine Inspectorate if a licensed manufacturing unit.

Sterile services department – inspection and packing rooms

4.27 Inspection and packing rooms should conform to the requirements of BS EN ISO 14644 and any additional requirements for the processing of medical devices, if applicable (see also Health Building Note 13 – 'Sterile services department').

LEV systems

4.28 LEV systems should conform to the Health and Safety Executive's 'The maintenance, examination and testing of local exhaust ventilation'.

Critical system verification failure

4.29 Should a critical system be unable to achieve the standard set out above, it should be taken out of service. If healthcare provision needs prevent the system being taken out of service, the senior manager of the user department should be informed in writing that the system performance is suboptimal. A copy of the notice should be sent to the infection control committee.

4.30 If a critical system is refurbished in order to bring it to a suitable standard, it should be subject to the full validation procedure set out in Section 8 of Part A or other application-specific guidance as appropriate.

Draft under Preparation

© Health Facilities Scotland, a Division of NHS National Services Scotland

5. Inspection and maintenance

General

5.1 Inspection and maintenance activities should be assessed to ensure that they do not create a hazard for those who undertake the work or for those who could be affected by it.

5.2 The degree and frequency of maintenance should relate to the function of the system, its location, its general condition and the consequence of failure.

5.3 Specimen inspection and maintenance checklists are given in Appendices 1 & 2.

Inspection and maintenance of critical systems

5.4 The loss of service of these systems would seriously degrade the ability of the premises to deliver optimal healthcare. In order to ensure reliable service provision, it is essential to inspect, verify and maintain these systems at appropriate intervals.

5.5 For many of these systems a permit-to-work will need to be completed to ensure that taking the ventilation system out of service does not compromise the activities of the user department. In any event, it will be necessary to liaise with the user department when switching the system off to carry out routine inspection and maintenance.

AHU drainage

5.6 AHU drainage systems comprise a drainage tray, glass trap, connecting pipework and an air break. The system should be inspected to ensure that it is clean and operating correctly. The cleanliness of the drainage tray and colour of the water in the trap will give an indication of a fault condition (see Table 3 below).

Draft under Preparation

Table 3: Colour of water in glass trap

Colour of water	Probable cause and comment
Normal	Satisfactory.
Green	Copper corrosion of pipework Possible leek in battery tubing.
White	Aluminium corrosion of battery fins.
Black	General dirt Filter faulty allowing air bypass System is overdue for a thorough clean Urgent action required.

© Health Facilities Scotland, a Division of NHS National Services Scotland

Brown/red	Iron corrosion (rust) within the duct May indicate a specific *Legionella* hazard Immediate action required.
Bubbly/slimy	Microbiological activity within the duct May indicate a specific *Legionella* hazard Immediate action required.

Filter changing

5.7 Dirty supply air filters may pose a general dust hazard when being changed.

5.8 Dirty extract-and-return air filters may pose an increased level of hazard. This will relate to the particular contamination within the air that they have filtered. Filters handling extract air from general areas are unlikely to present a significantly greater hazard than that posed by dirty supply air filters.

5.9 Care should be taken to protect staff from inhaling the dust. If there is a need to enter the duct when changing filters, a dust mask should be worn.

5.10 Dirty filters should be carefully removed and placed in the box that contained the replacement filters or in a plastic bag. On completion of the work, the dirty filters should be removed from the plantroom and disposed of appropriately.

5.11 The duct in the area of the filter housing should be carefully vacuumed before fitting the replacement filters. This will prevent particles (that is, those that are shed when the dirty filters are disturbed) being blown into the system downstream.

5.12 It is important to ensure that replacement filters are fitted the right way round. Most panel filters are manufactured with a membrane or wire support mesh on their downstream side. Alternatively they may be colour-coded. The manufacturer's instructions regarding fitting should be followed.

5.13 Bag filters should be fitted with the pockets vertical. Care should be taken to remove any transit tapes and to ensure that the individual pockets are separate and free to inflate.

Changing extract filters containing hazardous substances

5.14 Filters handling extract air from an LEV system will obviously present a hazard and should be subject to a safe system of work.

5.15 Filters used in an extract system for the containment of hazardous substances or organisms should incorporate design provision for their safe removal when so contaminated. This may be achieved by:

- sealing the hazardous substance into the filter before it is removed;
- a system to fumigate the filter to kill any organisms;

Draft Under Preparation

© Health Facilities Scotland, a Division of NHS National Services Scotland

- housing it in a 'safe change' unit that permits the filter to be ejected into a bag and sealed without staff having to come into direct contact with it.

5.16 The method chosen should reflect the nature of the hazard.

5.17 Filters fitted to remove hazardous substances from extract air are classed as hazardous waste and should be handled and disposed of accordingly.

Ventilation system cleaning

5.18 The intake section of a ventilation system should be vacuumed-out as necessary to remove visible particles.

5.19 AHUs should be vacuumed-out and/or washed down internally as necessary to remove obvious dust and dirt.

5.20 Chiller batteries, humidifier units, energy-recovery batteries or plates and their drainage systems should be washed down with hot water annually to remove visible contamination.

5.21 Supply air distribution ductwork conveys air that has been filtered. It will require internal cleaning only when it becomes contaminated with visible dirt. The frequency of cleaning will depend on the age of the system and grade of the AHU final filter but will typically be in excess of ten years. There is no requirement to clean ductwork annually. A rapid build-up of visible dirt within a supply duct is an indication of a failure of the filtration or its housing.

5.22 Extract air systems handle unfiltered air. They should be cleaned as frequently as necessary in order to maintain their operating efficiency. Room extract terminals, particularly those sited at low level in critical care areas, will need regular cleaning.

5.23 On completion of cleaning, the ductwork should not be 'fogged' with chemicals. This treatment has no lasting biocidal effect and is responsible for initiating the breakdown of the galvanised coating of ductwork. This will result in accelerated corrosion of the inside of the duct, with the products of corrosion being shed into the air stream. It will also significantly shorten service life.

5.24 Following duct cleaning, all service hatches should be checked to ensure that they have been correctly replaced and do not leak.

5.25 Duct-cleaning equipment that uses rotating brushes or a vacuum unit can easily damage flexible sections of ductwork. On completion of cleaning, all flexible duct sections should be checked for rips and tears. The straps that secure them to rigid duct sections and air terminals should also be checked to ensure that there is no air leakage.

Draft under Preparation

© Health Facilities Scotland, a Division of NHS National Services Scotland

Chilled beams

5.26 The efficiency of these units will rapidly decline if they become blocked with fluff/lint. They should be inspected every six months and cleaned as appropriate.

Split and cassette cooling units

5.27 These units incorporate internal recirculation air filters and a drainage system to remove condensate from the cooling coil. The systems should be inspected and cleaned every three months.

Portable room cooling units

5.28 Portable units are sometimes kept in-store or hired-in to cope with temporary local situations giving rise to excessive temperatures. They typically incorporate internal recirculation air filters and a drainage system to remove condensate from the cooling coil. Units employing an internal water reservoir and wick to promote evaporative cooling must not be used in healthcare premises.

5.29 The infection control team must be consulted before these types of unit are deployed.

5.30 The units should be inspected and thoroughly cleaned before being taken into use. Units that are to be used in areas containing immunocompromised patients will, unless new, need to be fumigated before use.

5.31 All portable units should be inspected and cleaned every week that they remain in use.

Self-contained mobile filter and/or ultraviolet (UV) light units

5.32 The efficacy of these units is directly related to their cleanliness. In this respect, the manufacturer's instructions regarding service/maintenance and lamp and filter replacement should be closely followed.

5.33 Units that have been used in isolation rooms or areas containing infective patients will need to be fumigated before being used in other locations, or returned to store or to the hirer.

5.34 Units that have been used in isolation rooms or areas containing infective patients will need to be fumigated before being used in other locations, or returned to store.

5.35 Filters fitted to remove hazardous substances from the recirculated room air are classed as hazardous waste and should be handled and disposed of accordingly (see also Scottish Health Technical Memorandum 07-01 – 'Safe management of healthcare waste').

Draft under Preparation

© Health Facilities Scotland, a Division of NHS National Services Scotland

Inspection and maintenance records

5.36 Records of inspection and maintenance activities should be kept for at least five years.

Draft under Preparation

© Health Facilities Scotland, a Division of NHS National Services Scotland

Health Facilities Scotland

NHS National Services Scotland

Appendix 1: Annual inspection of critical ventilation systems – AHU and plantroom equipment

Definition of terms used on survey form

General condition

End of useful life
This should be clear from the condition of the AHU and its associated services and plant. The main indicators will be: • extensive internal and/or external corrosion of the AHU casing; • failure of filter housings to prevent air bypass; • general corrosion of heater and cooling battery fins, attenuator surfaces etc; • significant failure to meet minimum standards; • associated plant services and control elements in a poor condition or not able to fulfil their purpose; • AHU aged 20 years or more.
Action: Urgent replacement indicated.

Poor
Should be fairly apparent but should include an assessment of the degree of corrosion; • cleanliness of coils and batteries; quality of filter mountings and their ability to prevent air bypass; fan and drive train condition; the control system elements' ability to fulfil their function; • condition of the access doors and inspection covers. The age of the AHU is generally less important.
Action: Extensive refurbishment or prolonged replacement indicated.

Average
Some faults but generally free of significant corrosion, clean internally and conforming to minimum standards.
Action: Faults capable of corrosion at next maintenance period.

Good
Conforming to the minimum standards, obviously cared for and subject to routine maintenance.
Action: Routine maintenance will preserve standard of equipment.

Draft under Preparation

© Health Facilities Scotland, a Division of NHS National Services Scotland

Compliance with minimum standards (questions 2 to 23, 32 and 33)

Poor
More than three answers are negative.
Action: Management action require by estates/facilities department.

Average
No more than 3 answers are negative.
Action: Maintenance action required.

Good
No answers are negative, full compliance.
Action: None.

Maintenance quality (questions 5, 12, 26 to 31 and 34 to 40)

Poor
More than three answers are negative.
Action: Management action required by estates/facilities department.

Average
No more than three answers are negative.
Action: Maintenance action required.

Good
No answers are negative.
Action: None.

Draft under Preparation

© Health Facilities Scotland, a Division of NHS National Services Scotland

Health Facilities Scotland

NHS National Services Scotland

Annual inspection of critical ventilation systems – AHU and plantroom equipment

Hospital ☐

Plantroom ☐

Air-handling unit ☐ **Age of unit** ☐

Area served by unit ☐

Date of survey ☐ **Name** ☐

General condition: End useful life ☐ **Poor** ☐ **Average** ☐ **Good** ☐

Compliance with minimum standards **Poor** ☐ **Average** ☐ **Good** ☐

(Questions 2 to 23; 32 and 33)

Maintenance quality **Poor** ☐ **Average** ☐ **Good** ☐

(Questions 5, 12, 26 to 31, 34 to 40)

No	Survey question	Yes	No	Comments
1	Plant running?			
2	Is the unit and its associate plant secure from unauthorised access?			
3	Is the unit safely accessible for inspection and maintenance?			
4	Is the air intake positioned to avoid short circuiting with extract or foul air from other sources such as gas scavenging outlets?			
5	Are all inspection lights operating?			
6	Are motorised dampers fitted to the intake and discharge?			
7	Are the fan motor(s) outside of the air stream?			

Draft Under Preparation

© Health Facilities Scotland, a Division of NHS National Services Scotland

8	Is the fan drive train visible without removing covers?			
No	Survey question	Yes	No	Comments
9	Is the cooling coil located on the discharge side of the fan?			
10	Is an energy-recovery system fitted (state type)?			
11	Are condensate drainage systems fitted to all energy recovery systems, cooling coils and humidifiers in accordance of Section 3 of Scottish Health Technical Memorandum 03-01, Part B?			
12	Are drainage traps clean and filled with water? (see Table 3 in SHTM 03-01, Part B)			
13	Is the drain trap air break at least 15mm?			
14	If a humidifier is fitted, state the type			
15	Is the humidifier capable of operation?			
16	Is there space to safely change the filters?			
17	Are there test holes in the principal ducts?			
18	Are the test holes capped?			
19	What is the general condition of the exterior of the AHU?			
20	Are the principal ducts lagged?			
21	What is the general condition of the associated control valves and pipework?			
22	Is the pipework adequately lagged?			
23	Is the system clearly labelled?			
24	Record prefilter differential pressure.			

Draft Under Preparation

© Health Facilities Scotland, a Division of NHS National Services Scotland

25	Record main filter differential pressure.			
Switch plant off. Fit padlock to isolator.				
26	Did the motorised dampers close on plant shut-down?			
27	Is the vermin/insect screen clean?			
28	Is the intake section including the fog coil clean?			
29	Are the prefilters correctly fitted with no air by-pass?			
30	Are all drive belts correctly aligned and tensioned?			
31	Is the cooling-coil matrix cleaned?			
32	Are all drip trays fully accessible or capable of being removed for cleaning and have a fall to drain?			
33	Are the drainage trays stainless?			
34	Are the drainage trays clean?			
35	Are there any signs of water ponding in the AHU?			
36	Is the matrix clean for each heater-battery?			
37	Have the main filters been correctly fitted with no air by-pass?			
38	Is AHU and its associated main ductwork clean internally?			
Remove padlock and Re-start plant.				
39	Did unit restart satisfactorily?			
Test automatic fan-motor change-over, if fitted				
40	Did automatic change-over operate satisfactorily?			

Draft under Preparation

© Health Facilities Scotland, a Division of NHS National Services Scotland

Additional comments
(For example: air leaks from access doors; control valves leaking or passing; general cleanliness of the area around the unit; or any other items of concern.)

Competent person/Authorised person……

Draft under Preparation

© Health Facilities Scotland, a Division of NHS National Services Scotland

Health Facilities Scotland

NHS National Services Scotland

Appendix 2: Operating suite annual verification

Definition of terms used on survey form

Assessment of compliance with Scottish Health Technical Memorandum 03-01 (all questions relevant to the type of theatre)

Poor
• Air volumes and hence air-change rates is less than 75% of the design; • room pressure differentials do not ensure a flow from clean to less clean areas; • supply or extract air diffusers are not clean; • pressure stabilisers not clean and/or not operating correctly; • significant faults or failures of indicators on surgeon's panel; • visible faults in the fabric of the suite; • doors unable to close completely; • general air of neglect.
Action: Urgent management action required

Average
• Air pressure and room pressure differentials approximate to the original design values; • supply air diffusers clean but extracts visibly fouled; • most pressure stabilisers clean and operating correctly; • some of the indicators on the surgeon's panel not working; • minor faults in the fabric and décor of the suite.
Action: Maintenance action required

Good
Better than average
Action: None

Maintenance quality (all questions relevant to the type of theatre)

Poor
More than three answers are negative
Action: Management action required by estates/facilities department

Average
No more than three answers are negative
Action: Maintenance action required

Draft under Preparation

© Health Facilities Scotland, a Division of NHS National Services Scotland

Good
No answers are negative
Action: None

Draft under Preparation

© Health Facilities Scotland, a Division of NHS National Services Scotland

Health Facilities Scotland

NHS National Services Scotland

Annual verification of theatre ventilation systems - Theatre suite information

Hospital ☐

Theatre name/no. ☐ **Type of Theatre** ☐

Date of survey ☐ **AHU location & ID** ☐

Name ☐

Compliance with SHPN & SHTM **Poor** ☐ **Average** ☐ **Good** ☐

Maintenance quality **Poor** ☐ **Average** ☐ **Good** ☐

No	Survey question	Yes	No	Comments
1	Has the annual verification of the AHU been carried out?			
2	Are windows hermetically sealed?			
3	Are the theatre is the theatre and prep room complete and sealed?			
4	Are there any significant faults in the fabric of the rooms in the suite?			
5	Are room light fittings correctly sealed?			
6	Do all doors close completely and hold against the room pressure?			
7	Are the pressure stabilisers operating correctly and silently?			
8	Are the supply and extract air terminals and pressure stabilisers visibly clean?			
9	Measure and record the operating room temperature			
10	Does this accord with that displayed on the surgeon's panel?			

Draft under Preparation

© Health Facilities Scotland, a Division of NHS National Services Scotland

No	Survey question	Yes	No	Comments
11	Measure and record the operating room relative humidity.			
12	Does this accord with that displayed on the surgeon's panel?			
13	Measure and record the supply and extract air flow in the principal ducts.			
14	Measure and record the air flow at all supply and extract terminals.			
15	Does the derived air-change rate achieve at least 75% of the design?			
16	For UCV units, also measure and record the air velocities within the canopy using the method set out in Section 8 of Scottish Health Technical Memorandum 03-01 (Part A)			
17	Do the air velocities achieve the standard appropriate for the type of canopy?			
18	Measure and record the room differential pressures			
19	Do the room differential pressures ensure a flow of air from the clean to the less clean areas?			
20	Measure and record the noise levels in the principle rooms of the suite.			
21	Do the noise levels fall below the limits set out in Table 2 of SHTM 03-01 Part B			
22	Check the operation of all ventilation control functions represented on the surgeon's panel.			
23	Do the indicators accurately represent the operational state of the ventilation			

Draft under Preparation

© Health Facilities Scotland, a Division of NHS National Services Scotland

	system(s)?			

No	Survey question	Yes	No	Comments
24	For UCV systems: is the UCV and AHU interlocked to ensure that the AHU runs at full speed when the UCV is at operating speed or at set-back? (see Table 6 in Scottish Health Technical Memorandum 03-01, Part A)			
25	With the UCV running at set-back, does the system maintain the standard of a conventional operating room?			
26	For all theatres: with the system running at set-back, does it maintain a flow of air from the clean to the less clean areas?			

Additional comments
(For example: the general décor; are the suite and its ventilation systems suitable for their designated functions?)

Competent person/Authorised person……

Draft under Preparation

© Health Facilities Scotland, a Division of NHS National Services Scotland

References

Acts and regulations

Scottish Technical Handbooks Non Domestic. Scottish Building Standards Agency, 2007. http://sbsa.gov.uk

Scottish Technical Handbooks, Non Domestic, Section 2: Fire. Scottish Building Standards Agency. 2007 http://sbsa.gov.uk

Scottish Technical Handbooks, Non Domestic Section 6: Energy. Scottish Building Standards Agency 2007. http://sbsa.gov.uk

Control of Substances Hazardous to Health Regulations (COSHH) 2002. SI 2002 No 2677. TSO, 2002. www.opsi.gov.uk/si/si2002/20022677.htm

Health Act 2006. TSO, 2006. www.opsi.gov.uk/ACTS/acts2006/20060028.htm

Health and Safety at Work etc Act 1974. HMSO, 1974.

Management of Health and Safety at Work Regulations 1999. SI 1999 No 3242. TSO, 1999. www.opsi.gov.uk/SI/si1999/19993242.htm

Medicines Act 1968. TSO, 1968.

Provision and Use of Work Equipment Regulations 1998. SI 1998 No 2306. HMSO, 1998. www.opsi.gov.uk/SI/si1998/19982306.htm

Workplace (Health, Safety and Welfare) Regulations 1992. SI 1992 No 3004. HMSO, 1992. www.opsi.gov.uk/si/si1992/Uksi_19923004_en_1.htm

British Standards

BS EN ISO 14644-1:1999. Cleanrooms and associated controlled environments. Classification of air cleanliness.

NHSScotland Publications

Scottish Health Planning Note 13: Sterile services department. Health Facilities Scotland forthcoming.

Scottish Health Technical Memorandum 04-01 – The control of *Legionella*, hygiene, 'safe' hot water, cold water and drinking water systems. Health facilities Scotland 2009.

Scottish Health Technical Memorandum 81: Fire Preventions in New Hospitals, 2003. Health Facilities Scotland.

Draft Under Preparation

© Health Facilities Scotland, a Division of NHS National Services Scotland

Scottish Health Technical Memorandum 07-01: Safe management of healthcare waste. Health Facilities Scotland forthcoming.

Scottish Health Technical Memorandum 08-01: Acoustics. Health Facilities Scotland forthcoming.

Scottish Health Facilities Note 30: Infection Control in The Built Environment: Design and planning. Health Facilities Scotland 2007.

Other publications

Health & Safety Commission (2000). Approved Code of Practice, Legionnaires' disease: the control of legionella bacteria in water systems (L8). Health and Safety Executive, 2000.

Health & Safety Executive (1998). The maintenance, examination and testing of local exhaust ventilation. HSE Books, 1998.

Health & Safety Executive (2005). Workplace exposure limits: containing the list of workplace exposure limits for use with the Control of Substances Hazardous to Health Regulations 2002 (as amended). HSE Books, 2005.

Health & Safety Commission's Health Services Advisory Committee (2005). Biological agents: managing the risks in laboratories and healthcare premises. HSE Books, 2005.

Health & Safety Commission's Health Services Advisory Committee (2005). Biological agents: the principles, design and operation of Containment Level 4 facilities. HSE Books, 2005.

Health & Safety Commission's Health Services Advisory Committee (2001). (The) Management, design and operation of microbiological containment laboratories. HSE Books, 2001.

Health & Safety Commission's Health Services Advisory Committee (2003). Safe working and the prevention of infection in clinical laboratories and similar facilities. HSE Books, 2003.

Health & Safety Commission's Health Services Advisory Committee (2003). Safe working and the prevention of infection in the mortuary and post-mortem room. HSE Books, 2003.

Draft under Preparation

© Health Facilities Scotland, a Division of NHS National Services Scotland

From: Lockhart Michael (NATIONAL SERVICES SCOTLAND)
Sent: 25 November 2015 10:44
To: O'Brien Geraldine (NATIONAL SERVICES SCOTLAND)
Cc: Rankin Annette (NATIONAL SERVICES SCOTLAND); Brown Claire (NATIONAL SERVICES SCOTLAND)
Subject: 20151125 (10.44) M Lockhart Re: QEUH WARD 4B HAEMATO-ONCOLOGY

Dear all,
I guess ideally we should be clear on our take with the info then discuss with Peter Hoffmann -but do we still have a tight turnaround time to work within -in which case I would suggest sharing earlier?

I can be flexible for meeting on Friday time wise,
m

Dr Michael Lockhart,
Consultant Medical Microbiologist,
Health Protection Scotland

On 25 Nov 2015, at 09:57, O'Brien Geraldine (NATIONAL SERVICES SCOTLAND) <geraldineobrien[redacted] wrote:

> Hi Annette
>
> Thanks for getting back to me, I am content with those arrangements if they suit Michael and Claire.
>
> Kind regards
>
> Geraldine
>
> PS your voicemail is still asking for mailbox numbers
>
> **Dr Geraldine O'Brien**
> Research Manager
> Engineering & Environment
> Health Facilities Scotland
> Procurement,Commisioning and Facilities
>
> NHS National Services Scotland
> **3rd Floor**
> Meridian Court
> 5 Cadogan Street
> Glasgow
> G2 6QE
>
> Telephone:
> [redacted]
>
> **Visit our website to find out more, book your places and register for updates or follow us**
> **<image001.png>**
>
> Please consider the environment before printing this email.
> NHS National Services Scotland is the common name for the Common Services Agency for the Scottish Health Service. www.nhsnss.org

NHS National Services Scotland Disclaimer

The information contained in this message may be confidential or legally privileged and is intended for the addressee only. If you have received this message in error or there are any problems please notify the originator immediately. The unauthorised use, disclosure, copying or alteration of this message is strictly forbidden.

From: Rankin Annette (NATIONAL SERVICES SCOTLAND)
Sent: 25 November 2015 09:39
To: O'Brien Geraldine (NATIONAL SERVICES SCOTLAND)
Subject: Re: QEUH WARD 4B HAEMATO-ONCOLOGY INFORMATION REQUEST

Hiya
I'm not in the office on Friday but could try and set up a t/c and at least we have talked this through?
For that sounds okay I'll see if Michael and Claire free around 1230?
I was thinking it might be helpful if we pulled together a table detailing the guidance (Scottish, U.K. , CDC etc) and the requirements within the guidance for this unit and then we could add in what the unit has. That would allow us to do a read across?
Does that make any sense??
A

On 25 Nov 2015, at 09:01, O'Brien Geraldine (NATIONAL SERVICES SCOTLAND) <geraldineobrien@[redacted] wrote:

> Good Morning Annette,
>
> I am really sorry I am not available tomorrow, I can make Friday anytime between 10.30 and 13.30 if that helps.
>
> Kind regards
>
> Geraldine
>
> **Dr Geraldine O'Brien**
> Research Manager
> Engineering & Environment
> Health Facilities Scotland
> Procurement,Commisioning and Facilities
>
> NHS National Services Scotland
> **3rd Floor**
> Meridian Court
> 5 Cadogan Street
> Glasgow
> G2 6QE
>
> Telephone:
> [redacted]
>
> **Visit our website to find out more, book your places and register for updates or follow us**
> **<image001.png>**

Please consider the environment before printing this email.
NHS National Services Scotland is the common name for the Common Services Agency for the Scottish Health Service. www.nhsnss.org

NHS National Services Scotland Disclaimer

The information contained in this message may be confidential or legally privileged and is intended for the addressee only. If you have received this message in error or there are any problems please notify the originator immediately. The unauthorised use, disclosure, copying or alteration of this message is strictly forbidden.

From: Rankin Annette (NATIONAL SERVICES SCOTLAND)
Sent: 24 November 2015 16:14
To: O'Brien Geraldine (NATIONAL SERVICES SCOTLAND); Lockhart Michael (NATIONAL SERVICES SCOTLAND); Brown Claire (NATIONAL SERVICES SCOTLAND)
Cc: Wilson Alison (NATIONAL SERVICES SCOTLAND)
Subject: FW: QEUH WARD 4B HAEMATO-ONCOLOGY INFORMATION REQUEST

Hi Geraldine/Michael/Claire

Please see attached documents from NHS GGC. Can I propose that we catch up on Thursday around 11 if possible. I have acknowledged receipt of the documents and have advised that I will be back in touch once we have discussed these. I haven't forwarded them to Peter Hoffman and wonder if I should at this stage?

Annette

From: Inkster Teresa (NHS GREATER GLASGOW & CLYDE - SGA20)
Sent: 24 November 2015 15:54
To: Rankin Annette (NATIONAL SERVICES SCOTLAND)
Cc: Moir Peter (NHS GREATER GLASGOW & CLYDE - SGA20); Loudon David (NHS GREATER GLASGOW & CLYDE - SGA20); Williams Craig (NHS GREATER GLASGOW & CLYDE - SGA20); Walsh Thomas (NHS GREATER GLASGOW & CLYDE - SGA20)
Subject: FW: QEUH WARD 4B HAEMATO-ONCOLOGY INFORMATION REQUEST

Annette - please find documents attached as requested
Kind Regards
Teresa

Dr Teresa Inkster
Consultant Microbiologist and Infection Control Doctor
Dept of Microbiology
Queen Elizabeth University Hospital
Glasgow
[redacted]

From: Moir, Peter [Peter.Moi[redacted]
Sent: 24 November 2015 15:10
To: Inkster Teresa (NHS GREATER GLASGOW & CLYDE - SGA20)
Cc: Walsh Thomas (NHS GREATER GLASGOW & CLYDE - SGA20); Williams Craig (NHS GREATER GLASGOW & CLYDE - SGA20); Powrie Ian (NHS GREATER GLASGOW & CLYDE - SGA20); Loudon David (NHS GREATER GLASGOW & CLYDE - SGA20)
Subject: QEUH WARD 4B HAEMATO-ONCOLOGY INFORMATION REQUEST

Dear Teresa

Response to questions below;

1. **What was the original specification for ventilation in the adult BMT unit?**
   QEUH Ward 4B - The specification for the 14 in-patient bed Haemato-oncology ward was issued as part of the Board's Invitation to Participate in Competitive Dialogue (2009) and comprised three documents. These were either issued as part of the document pack or referred to in text as follows;

   a) The Board's clinical output specification (COS). (Refer attached document – Haemato oncology Ward 4B Brief 2009 & 2013). This document includes the original COS from 2009 and the COS for the Compensation Event issued to Brookfield Multiplex in 2013 to increase the number of in-patient beds in this ward to 24.
   b) SHPN 054 – Facilities for Cancer Centres (Available HFS website- 2009 relevant copy).
   c) SHTM 03-01 Ventilation for Healthcare Premises (Available HFS website – 2009 relevant copy).

2. **What was the original specification for ventilation in the paediatric BMT unit?**
   RHC Ward 2A - The specification for the 8 isolation rooms in Schiehallion Ward was issued as part of the Board's Invitation to Participate in Competitive Dialogue (2009) and comprised three key documents. These were either issued as part of the document pack or referred to in text as follows;

   a) The Board's clinical output specification. (Refer attached document – NSGACL Haemat-Oncology NCH).
   b) SHPN 054 – Facilities for Cancer Centres (Available HFS website - 2009 relevant copy).
   c) SHPN 04: Supplement 1: Isolation Facilities in Acute Settings (Available HFS website – 2009 relevant copy).

3. **What evidence was presented to NHSGGC that the BMT units (adult and paediatric) met the agreed specification prior to handover?**

   RHC Ward 2A – I attach a zip file for the test data provided by Brookfield Multiplex during the commission period prior to handover in January 2015. (Refer attached file Ward 2A Commissioning Results (Children's isolation rooms).

   Ward 4B – As the ward has been fully upgraded the supply of a large amount of now redundant commissioning information does not seem sensible.

4. **What is the revised specification in the adult BMT unit?**
   The revised specification for the upgrade of Ward 4B is attached in the Word document - Ward 4b Upgrade Description of Works rev1.

5. **What changes have been made in the adult BMT unit since the patients were relocated from ward 4B back to the Beatson.**
   The works listed in item 4 have been fully implemented and inspected by the Board's Supervisor (Capita) and undergone commissioning and validation tests as noted in item 6 below.

6. **What evidence was presented to NHSGGC that the adult BMT unit now meets the agreed specification since the changes have been made?**
Brookfield Multiplex has provided a full commissioning and validation report, please refer attached document - QEUH Ward 4B Upgrade Works Report Oct 2015. This report summarises the works undertaken, the install of digital pressure gauges, the balancing and testing of the air supply system by H&V, the DOP test to HEPA filters and the air permeability tests undertaken by RSK to meet the requirements of SHPN 04: Appendix 2. I believe a deep clean by NHS Estates and microbiological tests remain outstanding.

7. **What is the current specification in the existing BMT unit in the Beatson?**
I don't have access to the original design or 'as fitted' information for the BMT Unit at the Beatson, I suggest the Estates Department at Gartnavel General are contacted to supply.

I have visited the unit and can describe **my own** understanding of how the unit is configured as follows, note this is only for information and should be verified with the Estates Dept.

The BMT bedrooms are single rooms opening directly onto the main circulation corridor. The rooms each have an adjoining shower/wc/whb compartment. There is no pressure lobby between the room and corridor. The rooms are fitted with digital pressure gauges that measure the pressure between the room and the ward corridor. During my visit I sampled three rooms where the doors had remained closed, they displayed pressures of 3.9pa; 4.1pa and 9.9pa, I have a photo record. The rooms were understood to work in the 5-10pa range with extract through the en-suite and some minor leakage to corridor under doors. When doors were opened I noted the pressure drop to around 0pa, quickly rising to original pressure once closed. The ceilings in the bedrooms are imperforate with sealed light fittings and hatches where fitted. At each end of the ward there are two sets of double doors.

8. **What was the commissioning process for the adult and paediatric BMT?**
The commissioning process for QEUH Ward 4B is set out in the documentation provided by Brookfield Multiplex, as referred above. The commissioning results for RHC Ward 2A were supplied by Brookfield Multiplex at handover and should be located on the Zutec building management system held by our Estates Department; this will include airflows, pressure tests and DOP tests for HEPA filters. Brookfield Multiplex is about to issue air permeability test results to meet requirements of SHPN 04 Supp. 2, for the eight rooms in Schiehallion Ward and I will copy this information to you when received. We have verbal confirmation that the eight rooms in Ward 2A have passed air permeability tests. For noting this report will record the results from air permeability tests to all the thirty-six isolation rooms throughout the QEUH and RHC, I'm advised all have passed.

9. **Was there an ICT/microbiology sign off on handover for these areas?**
There was no requirement in the Board's contract with Brookfield Multiplex to undertake microbiological testing at completion of the works, due to the length of time between handover and service

migration. The planning and timing of such tests were to be part of the migration and arranged by the Service to suit move in date and time scales for results etc,.

If you require any further information please make contact by email.

Regards

Peter Moir
Deputy Project Director

South Glasgow Hospitals Project Office
NHS Greater Glasgow & Clyde
Room L1/25
Management Building
1345 Govan Road
Glasgow G51 4TF

[redacted]

From: Inkster Teresa (NHS GREATER GLASGOW & CLYDE - SGA20) [mailto:teresa.inkster[redacted]
Sent: 24 November 2015 10:02
To: Loudon, David; Walsh, Tom; Williams, Craig; Moir, Peter; Powrie, Ian
Cc: McColgan, Melanie; Rankin Annette (NATIONAL SERVICES SCOTLAND); O'Brien Geraldine (NATIONAL SERVICES SCOTLAND); McNamee, Sandra
Subject: RE: BMT QEUH

Dear David,

I have been asked to lead on the BMT move back to QEUH. Up until this time I have had no involvement in the project and I have been supplied with minimal information to date. It is imperative expert opinion is sought and this would be my normal practice for a specialised ventilated area, in the interest of patient safety.

I appreciate that the BMT unit in QEUH is not built to the same spec as the unit at Gartnavel, even more reason why it would be useful to have an expert on ventilation comment on the spec and validation reports.

As I explained I am following up on correspondence with Peter Hoffman initiated by a colleague in July - see attached email for more info. Peter himself has suggested the involvement of HPS.

Environmental sampling policies are attached.

Kind Regards
Teresa

Dr Teresa Inkster
Consultant Microbiologist and Infection Control Doctor
Dept of Microbiology
Queen Elizabeth University Hospital

Glasgow
[redacted]

From: Loudon, David [David.Loudon[redacted]
Sent: 23 November 2015 16:14
To: Inkster Teresa (NHS GREATER GLASGOW & CLYDE - SGA20); Walsh Thomas (NHS GREATER GLASGOW & CLYDE - SGA20); Williams Craig (NHS GREATER GLASGOW & CLYDE - SGA20); Moir Peter (NHS GREATER GLASGOW & CLYDE - SGA20); Powrie Ian (NHS GREATER GLASGOW & CLYDE - SGA20)
Cc: Mccolgan Melanie (NHS GREATER GLASGOW & CLYDE - SGA20); Rankin Annette (NATIONAL SERVICES SCOTLAND); O'Brien Geraldine (NATIONAL SERVICES SCOTLAND); Mcnamee Sandra (NHS GREATER GLASGOW & CLYDE - SGA20)
Subject: RE: BMT QEUH

Dear Dr Inkster,

Thank you for your message but it doesn't quite answer the questions I asked.

Can you please confirm the nature of your discussions with HPS and advise on your concerns regarding the BMT rooms. I think it is reasonable to ask for a copy of the briefing document and scope of services that may be requested from Peter Hoffman.

Can you please provide a copy of the local guideline which is based on expert opinion. This would be helpful.

David W. Loudon, MCIOB, CBIFM, MBA
Director of Facilities and Capital Planning
NHS Greater Glasgow & Clyde
Corporate Headquarters
JB Russell House
Gartnavel Royal Hospital
Glasgow
G12 0XH

[redacted]

From: Inkster Teresa (NHS GREATER GLASGOW & CLYDE - SGA20) [mailto:teresa.inkster[redacted]
Sent: 23 November 2015 10:25
To: Loudon, David; Walsh, Tom; Williams, Craig; Moir, Peter; Powrie, Ian
Cc: McColgan, Melanie; Rankin Annette (NATIONAL SERVICES SCOTLAND); O'Brien Geraldine (NATIONAL SERVICES SCOTLAND); McNamee, Sandra
Subject: RE: BMT QEUH

Dear David,

I am the ICD for Regional services and have been asked to lead on this. I am simply following up on correspondence between my colleague Prof Williams and Peter Hoffman.

With regards to air sampling I am following a local guideline based on expert opinion.

Teresa

Dr Teresa Inkster
Consultant Microbiologist and Infection Control Doctor
Dept of Microbiology
Queen Elizabeth University Hospital
Glasgow
[redacted]

From: Loudon, David [David.Loudon[redacted]
Sent: 20 November 2015 16:13
To: Inkster Teresa (NHS GREATER GLASGOW & CLYDE); Walsh Thomas (NHS GREATER GLASGOW & CLYDE); Williams Craig (NHS GREATER GLASGOW & CLYDE); Moir Peter (NHS GREATER GLASGOW & CLYDE); Powrie Ian (NHS GREATER GLASGOW & CLYDE)
Cc: Mccolgan Melanie (NHS GREATER GLASGOW & CLYDE); Rankin Annette (NATIONAL SERVICES SCOTLAND); O'Brien Geraldine (NATIONAL SERVICES SCOTLAND); Mcnamee Sandra (NHS GREATER GLASGOW & CLYDE)
Subject: RE: BMT QEUH

Dear Dr Inkster,

Thank you for copying me in to your reply.

It would be helpful to know the nature of your discussions with HPS and to outline your issues with the BMT. Presently, this is not clear.

I would anticipate that any involvement by Peter Hoffman will be in accordance with a scoping document or brief. Can you please provide a copy of the intended scope / brief.

I also understand that you are to conduct or are currently conducting an infection control testing regime in the rooms. Can you please advise on the nature of the testing and to which accredited guidance documentation that you are using to assess the results.

David W. Loudon, MCIOB, CBIFM, MBA
Director of Facilities and Capital Planning
NHS Greater Glasgow & Clyde
Corporate Headquarters
JB Russell House
Gartnavel Royal Hospital
Glasgow
G12 0XH

[redacted]

From: Inkster Teresa (NHS GREATER GLASGOW & CLYDE) [mailto:teresa.inkster[redacted]
Sent: 20 November 2015 15:14
To: Walsh, Tom; Williams, Craig; Moir, Peter; Loudon, David; Powrie, Ian
Cc: McColgan, Melanie; Rankin Annette (NATIONAL SERVICES SCOTLAND); O'Brien

Geraldine (NATIONAL SERVICES SCOTLAND); McNamee, Sandra
Subject: RE: BMT QEUH

Dear Tom ,

The meeting was a fact finding exercise for HPS. Annette has taken notes of the meeting and the actions are the questions listed in the email Annette sent yesterday afternoon.

HPS have already involved HFS in discussions and will be taking the lead coordinating role. Once the information requested has been provided HPS will liaise with and distribute the documents to both HFS and Peter Hoffman.

It would be useful if we could give HPS a timescale for document submission.

Kind Regards
Teresa

Dr Teresa Inkster
Consultant Microbiologist and Infection Control Doctor
Dept of Microbiology
Queen Elizabeth University Hospital
Glasgow
[redacted]

From: Walsh, Tom [Tom.Walsh[redacted]
Sent: 20 November 2015 14:39
To: Inkster Teresa (NHS GREATER GLASGOW & CLYDE); Williams Craig (NHS GREATER GLASGOW & CLYDE); Moir Peter (NHS GREATER GLASGOW & CLYDE); Loudon David (NHS GREATER GLASGOW & CLYDE); Powrie Ian (NHS GREATER GLASGOW & CLYDE)
Cc: Mccolgan Melanie (NHS GREATER GLASGOW & CLYDE); Rankin Annette (NATIONAL SERVICES SCOTLAND); O'Brien Geraldine (NATIONAL SERVICES SCOTLAND); Mcnamee Sandra (NHS GREATER GLASGOW & CLYDE)
Subject: RE: BMT QEUH

Dear Teresa

It would be very helpful for us to have the minutes, or as a minimum further detail and action notes, from your meeting with HPS please.

We have, as you know, already initiated contact with colleagues in HFS on this matter and I am keen to continue with this helpful input. To this end I have copied Geraldine O'Brien at HFS into this email. My own understanding is that HFS would normally lead on matters relating to ventilation and associated engineering works, this is however a matter for HFS and HPS to decide and I am pleased to note that all agencies are to be involved.

Could I also ask for confirmation that Peter Hoffman has been (or will be) provided with all the relevant Scottish Building and Technical notes so that his advice can be provided in the context of our extant guidance?

Many thanks

Tom

From: Inkster Teresa (NHS GREATER GLASGOW & CLYDE)
[mailto:teresa.inkster[redacted]
Sent: 19 November 2015 16:10
To: Williams, Craig; Walsh, Tom; Moir, Peter; Loudon, David; Powrie, Ian
Cc: McColgan, Melanie
Subject: FW: BMT QEUH
Importance: High

Dear all - please see below info requested from HPS in relation to the BMT unit.
I have forwarded the revised specification and validation reports, however I do not have the other documents/information they have requested . Can you forward to me and I will send on.
Kind Regards
Teresa

Dr Teresa Inkster
Consultant Microbiologist and Infection Control Doctor
Dept of Microbiology
Queen Elizabeth University Hospital
Glasgow
[redacted]

From: Rankin Annette (NATIONAL SERVICES SCOTLAND)
Sent: 19 November 2015 15:34
To: Inkster Teresa (NHS GREATER GLASGOW & CLYDE)
Cc: Lockhart Michael (NATIONAL SERVICES SCOTLAND); Brown Claire (NATIONAL SERVICES SCOTLAND); HPSInfectionControl (NATIONAL SERVICES SCOTLAND)
Subject: BMT QEUH

Dear Teresa

Many thanks for meeting with us today to talk through the issues relating to ventilation in the Adult bone marrow transplant (BMT) units at QEUH. I understand the paediatric BMT unit remains unchanged however there have been some changes made to the adult BMT unit since the hospital was originally handed over from the contractors.
To allow us to provide the support requested relating to the BMT unit at Queen Elizabeth University Hospital are you able to provide information on the following?:

- What was the original specification for ventilation in the adult BMT unit?
- What was the original specification for ventilation in the paediatric BMT unit?
- What evidence was presented to NHSGGC that the BMT units (adult and paediatric) met the agreed specification prior to handover?
- What is the revised specification in the adult BMT unit?
- What changes have been made in the adult BMT unit since the patients were relocated from ward 4B back to the Beatson
- What evidence was presented to NHSGGC that the adult BMT unit now meets the agreed specification since the changes have been made?
- What is the current specification in the existing BMT unit in the Beatson?
- What was the commissioning process for the adult and paediatric BMT?
- Was there an ICT/microbiology sign off on handover for these areas?

HPS are happy to support NHSGGC. Once I am in receipt of the above information I will set up a meeting with HPS, NHSGGC, HFS and Peter Hoffman from PHE.

Annette

Annette Rankin
Nurse Consultant Infection Control

NHS National Services Scotland
Health Protection Scotland
4th Floor
Meridian Court
5 Cadogan Street
Glasgow
G2 6QE
[redacted]
www.hps.scot.nhs.uk/
Pease consider the environment before printing this email.
NHS National Services Scotland is the common name for the Common Services Agency for the Scottish Health Service. www.nhsnss.org

****
****

This message may contain confidential information. If you are not the intended recipient please inform the sender that you have received the message in error before deleting it.
Please do not disclose, copy or distribute information in this e-mail or take any action in reliance on its contents: to do so is strictly prohibited and may be unlawful.

Thank you for your co-operation.

NHSmail is the secure email and directory service available for all NHS staff in England and Scotland
NHSmail is approved for exchanging patient data and other sensitive information with NHSmail and GSi recipients
NHSmail provides an email address for your career in the NHS and can be accessed anywhere

****
****
****
****

NHSGG&C Disclaimer
The information contained within this e-mail and in any attachment is confidential and may be privileged. If you are not the intended recipient, please destroy this message, delete any copies held on your systems and notify the sender immediately; you should not retain, copy or use this e-mail for any purpose, nor disclose all or any part of its content to any other person.
All messages passing through this gateway are checked for viruses, but we strongly recommend that you check for viruses using your own virus scanner as NHS Greater Glasgow & Clyde will not take responsibility for any damage caused as a result of virus infection.
****
****

****
****

This message may contain confidential information. If you are not the intended recipient please inform the sender that you have received the message in error before deleting it.
Please do not disclose, copy or distribute information in this e-mail or take any action in reliance on its contents:

to do so is strictly prohibited and may be unlawful.

Thank you for your co-operation.

NHSmail is the secure email and directory service available
for all NHS staff in England and Scotland
NHSmail is approved for exchanging patient data and other
sensitive information with NHSmail and GSi recipients
NHSmail provides an email address for your career in the NHS
and can be accessed anywhere

****
****
****
****

NHSGG&C Disclaimer
The information contained within this e-mail and in any attachment is confidential and may be privileged. If you are not the intended recipient, please destroy this message, delete any copies held on your systems and notify the sender immediately; you should not retain, copy or use this e-mail for any purpose, nor disclose all or any part of its content to any other person.
All messages passing through this gateway are checked for viruses, but we strongly recommend that you check for viruses using your own virus scanner as NHS Greater Glasgow & Clyde will not take responsibility for any damage caused as a result of virus infection.

****
****

****
****

This message may contain confidential information. If you are
not the intended recipient please inform the
sender that you have received the message in error before
deleting it.
Please do not disclose, copy or distribute information in this
e-mail or take any action in reliance on its contents:
to do so is strictly prohibited and may be unlawful.

Thank you for your co-operation.

NHSmail is the secure email and directory service available
for all NHS staff in England and Scotland
NHSmail is approved for exchanging patient data and other
sensitive information with NHSmail and GSi recipients
NHSmail provides an email address for your career in the NHS
and can be accessed anywhere

****
****
****
****

NHSGG&C Disclaimer
The information contained within this e-mail and in any attachment is confidential and may be privileged. If you are not the intended recipient, please destroy this message, delete any copies held on your systems and notify the sender immediately; you should not retain, copy or use this e-mail for any purpose, nor disclose all or any part of its content to any other person.

All messages passing through this gateway are checked for viruses, but we strongly recommend that you check for viruses using your own virus scanner as NHS Greater Glasgow & Clyde will not take responsibility for any damage caused as a result of virus infection.
****
****

****
****

This message may contain confidential information. If you are not the intended recipient please inform the
sender that you have received the message in error before deleting it.
Please do not disclose, copy or distribute information in this e-mail or take any action in reliance on its contents:
to do so is strictly prohibited and may be unlawful.

Thank you for your co-operation.

NHSmail is the secure email and directory service available for all NHS staff in England and Scotland
NHSmail is approved for exchanging patient data and other sensitive information with NHSmail and GSi recipients
NHSmail provides an email address for your career in the NHS and can be accessed anywhere

****
****
****
****

NHSGG&C Disclaimer
The information contained within this e-mail and in any attachment is confidential and may be privileged. If you are not the intended recipient, please destroy this message, delete any copies held on your systems and notify the sender immediately; you should not retain, copy or use this e-mail for any purpose, nor disclose all or any part of its content to any other person.
All messages passing through this gateway are checked for viruses, but we strongly recommend that you check for viruses using your own virus scanner as NHS Greater Glasgow & Clyde will not take responsibility for any damage caused as a result of virus infection.
****
****

To: Inkster Teresa (NHS Greater Glasgow & Clyde)
Subject: RE: Isolation rooms

Dear Teresa,

I suspect these rooms are "positive pressure ventilated lobby" (PPVL) room to the design in Health Building Note 4 supplement 1 (HBN4 suppl 1) – pdf attached. I'm not sure of the position in Scotland, but this guidance was archived in 2010 and replaced (England) very recently by the isolation room guidance attached.

I am not entirely happy with the HBN 4 suppl 1 room concept and see it as a series of engineering solutions to problems that may not merit that degree of solution. Let me explain (with reservations in brackets). The concept is that a high volume of air is supplied to the lobby. That air then flows out to both the corridor and into the room, creating a barrier to protect patients in the room from airborne microbes in the corridor. (I can't see what infectious agents would be relevant here). Air flows into the patient's room via a pressure release dampers – those moveable flaps you get in theatres. If built precisely to the design parameters of the test setup used to "prove" these rooms, this air circulates in the patient room and rapidly dilutes any airborne infectious agents from a patient in the bed. (1 – the tested dimensions are not published and the rooms I have seen are all variants on that pattern; 2 - I can't see why there needs to be such rapid dilution – staff are not that much at airborne risk). The air then passes through a transfer grille in the bathroom door and is extracted via a powerful extract in the ensuite bathroom. Another worry is that, while described as "neutral" pressure, this only means that the patient rooms are not intentionally positive or negative; they nevertheless will be either one or the other. If they leak outwards, there is the possibility of escape of infectious agents to adjacent rooms. The rooms are meant to be leak tested when they are first commissioned (but to a standard that relates to energy efficiency rather than total sealing) and annually thereafter (not sure how realistic this is).

I am happier with the concept of negative pressure. No attempt at "protective" isolation and rooms can leak, but they leak safely inwards. Simple and robust.

For protection of highly neutropenic patients (these are specifically excluded from both previous and current editions of the guidance), all fungal spores need to be removed from the air. This would be by HEPA-filtering the supplied air and ensuring that these room leak outwards, preventing ingress of unfiltered air via gaps (hence "positive pressure", but the protection is mostly in the HEPA filtering – positive pressure without HEPA filtration is pointless).

Does this address you questions? Happy for further exploration of the matter.

Regards,
Peter

From: Inkster Teresa (NHS Greater Glasgow & Clyde) [mailto:teresa.inkster[redacted]
Sent: 09 November 2012 10:57
To: Peter Hoffman
Subject: Isolation rooms

Dear Peter,

I was wondering if I could ask your advice about isolation rooms . I have been shown plans for the new Southern general hospital in Glasgow which include a suite of isolation rooms with lobbies . I am not familiar with these rooms although I am aware they have been put in new builds elsewhere . Is there any disadvantages to having them as opposed to the conventional negative and positive pressure rooms?

Kind Regards
Teresa

09/11/2015

Dear Dr Stewart

Further to the outcome of your investigation on 30/10/15 into concerns we raised regarding patient safety we feel it necessary to write to you to reiterate these concerns. Whilst we acknowledge there are issues within the infection control team with respect to functioning , governance, behaviour and cultures the focus of our concerns was and remains patient safety. It is unclear to us how the OD event later this month will adequately address these concerns. A brief summary of ongoing issues and patient safety concerns are detailed below.

QEUH new build

There was minimal involvement from the Infection Control Team (ICT) with regards to the new build design. SHFN 30 clearly delineates the roles and responsibilities of the ICT at each stage from planning to handover and ongoing monitoring. In summary plans for ventilation specifications were not signed off, validation reports were unchecked and monitoring prior to and after patients moving in was not undertaken. As a result essential components were missing from the design putting patients at risk. We have no had assurances that these deficiencies have been addressed in the following areas;

A) **Adult BMT** - ward 4B QEUH was moved back to the Gartnavel site in July 2015 .The BMT rooms in 4B were not fit for purpose. During our involvement with the process of moving the unit back specification plans and validation reports were not made available to us. No environmental monitoring took place prior to patients moving in . Air monitoring subsequent to patients moving in revealed high levels of fungus in the environment . Please note that on two occasions reference to CDC guidance on specification was forwarded to the design and infection control teams by Dr Inkster at least a year prior to the move. Ward 4B has now been handed back to the users. The last involvement either of us had was the meeting on Friday July 10th when the decision was made to move the patients back to the Beatson. We were not invited to the follow up meeting on the Monday and have had no correspondence regarding the process of remedial work until Dr Inkster was informed on Monday 2nd November that the building was being handed back and she was now Leading for infection control regarding the move back from the Beatson. Our concerns have yet to be adequately addressed.

B) Children's BMT –In contrast air monitoring was performed in the children's BMT prior to patients entering the unit. Despite fungus being found on air sampling and holes present in the ceiling where light fittings were missing, patients were moved in and transplants allowed to proceed. Whilst remediation works are taking place transplants continue to take place and air sampling results have continued to be positive. Highly pathogenic fungi were frown in the environment eg Mucor and Aspergillus.

C) **Isolation rooms in critical care** – On several occasions we have been informed by senior management that these rooms are safe. In July BICC were assured that these rooms met the national specs, however in June Dr Peters had pointed out to IC management that this was not the case as permeability testing was not carried out and she had concerns around the design and commissioning process. Furthermore on inspection pressures have been wrong (-30 Pa instead of +10Pa), baffles were jammed shut, and rooms are not sealed. There are no alarms in place which is a specific stipulation in the SHBN-04 for consideration of these rooms to be fit for purpose. We continue to experience calls regarding safe placement of patients with infectious conditions with no assurances that these rooms meet the required specification. There continues to be confusion regarding which rooms have been "fixed" and we are not in receipt of any documentation that gives us assurance that this is the case.. In addition to patient safety issues there are issues with staff safety should these rooms not be functioning.

D) **Other clinical areas**
– there had been shortcomings in design and commissioning with regard to the decontamination room in A+E which was identified as the place to admit ?VHF patients
- Respiratory clinics did not have adequate decontamination facilities with buckets of water being used as decontamination sinks were not provided in the design.
- We have heard rumours regarding other defects in ventilation and design, but have no access to the information or the discussion surrounding the design and commissioning of these units eg dental facilities, audiology units etc..

Old Build

A)**Neurosurgical theatres**– there have historically been recurrent sewage leaks in these theatres. During investigation of a recent leak fungus was

identified on air sampling and wet mouldy materials removed from ceilings above theatres. Major issues were noted with theatre layout and practice and these have been escalated but not actioned. Of particular note is that sterile stores for instruments do not meet recommended standards with respect to ventilation . One such store has missing ceiling tiles with evidence of water damage but is still in use. A recent review of spinal surgery rates indicate that NHS GGC rates are up to six times higher than the literature on the subject quotes.

Outbreaks/Incidents

A) **NICU** – there has been a recent death due to Serratia bacteraemia in NICU. We are aware from attendance at team meetings that Serratia has been present in the unit since July. Despite asking we were given minimal information as we do not have ICD responsibility for this area . Screening for a source was suggested by us in August however we were told that this was not felt necessary until further cases emerged. Other environmental organisms such as Acinetobacter , Pseudomonas and Burkholderia have also been identified. . There has been a death due to Pseudomonas bacteraemia. This would suggest major failings with the environment . Furthermore there have also been a number of SABs, and genotyping of isolates has been suggested, but not carried out to date which would clarify whether these are the same strain or not. Whilst this is not our area of responsibility, we do cover the unit out of hours and have concerns that IC issues have not been resolved.

B) **EBOLA**

IC planning for the care and isolation of ?VHF cases has lacked clarity. The decon room in A+E was identified as an appropriate place to care for high risk patient, however the room was not functional, with doors not shutting , temperature control being inadequate and the floor difficult to decontaminate due to rough surface, among other issues. That room was designed for radiological and chemical incidents, with completely different requirements from infectious agents. There is confusion around which level of the IPCT is responsible for the full planning of such incidents and decisions are made without being communicated to local teams which had a direct adverse consequence in the recent Ebola case as well as with ?MERS cases admitted recently.

In conclusion we do not have reassurance that these situations are being adequately addressed/ resolved . We are concerned that local colleagues with expertise have also raised concerns regarding these issues. We suggest that it may be beneficial to have an external expert opinion with regard to these situations in order to give the organisation comfort that patients are not being put at risk.

Dr Teresa Inkster MBChB, BSc (Hons), FRCP, DTMH, MPH, FRCPath
Consultant Microbiologist and Infection Control Doctor
Training Programme Director, Medical Microbiology.
Dept of Microbiology
Queen Elizabeth Hospital
Glasgow

Dr Christine Peters MBChB, BSc (Hons), DTMH, FRCPath
Consultant Microbiologist and Infection Control Doctor
Dept of Microbiology
Queen Elizabeth Hospital
Glasgow

From: Peters, Christine
Sent: 01 July 2015 13:16
To: Jones, Brian; Parker, Anne; McQuaker, Grant; Campbell, Myra; Inkster, Teresa (NHSmail); Jenkins, Gary
Subject: RE: Transplant ventilation
Attachments: BMT Accomodation.docx

Thank you Brian,
This is in agreement with the specifications that we outlined this morning,

Please find attached a summary of the specifications and current state of knowledge about what we have in place, pending further information becoming available this afternoon.

Regards,

Christine

Dr Christine Peters
Consultant Microbiologist
Southern General Hospital
GGC
[redacted]

From: Jones, Brian
Sent: 01 July 2015 13:09
To: Parker, Anne; McQuaker, Grant; Campbell, Myra; Peters, Christine; Inkster, Teresa (NHSmail); Jenkins, Gary
Subject: FW: Transplant ventilation

FYI

From: Hood, John
Sent: 23 June 2015 18:13
To: Williams, Craig; Powrie, Ian; Walsh, Tom
Subject: RE: Transplant ventilation

Dear Craig,
Sorry for delayed reply. My computer was changed last Chritmas and a decade of emails still reside in it that I cannot (easily) access. I have scanned in a document which includes the spec for the haematology BMT rooms in the top floor of the Beatson - Ian had already asked me this question some time ago and I pointed him in the direction of the Estates Dept at GGH - but as Mel Aitken left some years ago, the original commissioning details may be lost. The other specifications that are not on this sheet are:

1. Sealed rooms (can't remember the leak allowed)
2. Waterproof paint throughout - particularly in toilet/shower areas
3. Plasterboard that has fungicide in it - in toilet/shower areas particularly
4. Positive pressure from room to corridor of at least 5 but as near 10 Pa as possible.
5. A clear **digital** read out of the pressure difference across the door (**not** a magnahelix guage)
6. The particle counts in these rooms when commissioned, cleaned and empty of people, should be certainly below 1000 particles of ≤0.5microns per cubic foot. Good ones should be 100 - 200 or less.

The second question about adult UK BMT units and 'non DH rooms' I cannot answer…..but suggest you talk to Peter Hoffman at PHE Colindale:
[redacted], Peter. Hoffman[redacted]

Hope that this helps.
Kindest regards
John

From: Williams, Craig
Sent: 19 June 2015 15:31
To: Hood, John
Cc: Powrie, Ian; Walsh, Tom
Subject: Transplant ventilation

Dear John

It appears that bone marrow transplants are being undertaken in ward 4B1 SGUH not in the lobbied side-rooms in the renal area where we thought that they would be done. The rooms on 4B1 have HEPA filtered inlets but no lobbies. Ian Powrie is currently trying determine which pressure gradients are in place. These rooms will offer less protection than the previous unit at the Beatson. Do you have the engineering specs for the Beatson, also do you know if any adult BMT units in the UK just have "non-DH" rooms.

Best wishes

Craig

Prof Craig Williams
Consultant Microbiologist RHSC Glasgow
Lead ICD NHSGGC
Professor of HAI UWS

[redacted]
w www.uws.ac.uk/hai

From:	Jones, Brian on behalf of [redacted]
To:	Inkster, Teresa (NHSmail); Peters, Christine; Wright, Pauline;
Subject:	FW:
Attachments:	BMT 2009 44 495-507.pdf;HICPAC Guidelines Isolation 2007.pdf;
Sent:	13/08/2015 13:44:07

FYI

From: Jones, Brian
Sent: 12 August 2015 12:34
To: Archibald, Grant
Subject:

Dear Grant,

I have not been asked to address any action points (and I don't want to muddy the waters) but I thought, in order to provide a more complete picture, I would send you copies of the guidance from an international group published in Bone Marrow Transplantation in 2009 and the HICPAC Guidance 2007 from the US (see Table 5 on p.132 Components of a protective environment).

In the SHPN 04 Supplement 1 (2008) it states on p.4 that the supplement does not describe the facilities required ….on wards where severely immunocompromised patients are nursed. On p.16 it states that where immunocompromised patients are to be accomodated such as in transplant units…. there could be a need for positive pressure isolation rooms. In the DoH HBN 04-01 Supplement 1, Isolation facilities for *infectious patients* in acute settings (2013) it states that the HBN does not describe the specialist facilities required …..for protective isolation of severely immunocompromised patients.

Peter Hoffman's advice has been consistent over the years and remains that these rooms are not appropriate for the protective isolation of severely immunocompromised patients.

I hope this helps and I'd be happy to discuss further.

Kind regards,

Brian

Professor Brian L. Jones
Consultant Medical Microbiologist, Glasgow Royal Infirmary
Head of Service, Microbiology & Virology, NHS GGC

Professor of Clinical Microbiology & Infection
Institute of Infection, Immunity & Inflammation,
University of Glasgow

[redacted]

brian.jones [redacted]
brian.jones [redacted]

Queen Elizabeth University Hospital (NHSGGC) Bone Marrow Transplant Unit HPS Support	
Situation	NHS Greater Glasgow and Clyde (NHSGGC) requested support from Health Protection Scotland (HPS) in the review of their Bone Marrow Transplant Unit within Queen Elizabeth University Hospital (QEUH)
Background	The decision to transfer the care of bone marrow transplant patients from the Beatson Oncology Unit to the QEUH was made in June 2013. Construction of the QEUH was well established at this point and therefore the unit was not purpose built. When the new hospital opened patients transferred to ward 4b form the Beatson Oncology unit. Concern was raised following environmental and air sampling yielded high particulate counts and fungal spore growth. On identification of these results the patients were relocated back to the Beatson Oncology Unit on xx as a temporary measure whilst remedial work was undertaken in ward 4b. HPS were contacted on xxx and support requested for a pragmatic assessment which would allow NHSGGC to provide a safe environment for the care of BMT patients to resume within ward 4B QEUH. HPS were also asked to consider whether additional precautions would be required over the coming years to protect these patients from environmental micro-organisms generated from the building works ongoing on the surrounding hospital site. This SBAR focuses on the adult BMT (Ward 4b): further work will be undertaken to support NHSGGC with other areas including the paediatric BMT (Schiehallion ward)
Assessment	A situational assessment was undertaken by HPS. This was undertaken by : • Requesting information from NHSGGC via a series of questions • Contacting Health Facilities Scotland to request support with the technical aspect of relevant guidance. • Liaising with Peter Hoffman (Public Health England) who is an internationally recognised ventilation expert • HPS undertaking a rapid literature review (Appendix 1) Guidance: There is no one single piece of suitable guidance applicable in this situation. The guidance comes from various sources including Scottish Health Technical Memoranda, Health Technical Memoranda,

Formatted: Font colour: Red

	Scottish Health Facilities notes, CDC guidance and expert opinion. As the planned of this unit was undertaken in June 2013, the applicable Scottish Guidance is SHTM 03-01 Additional reference guidance includes • HTM 2025 • HTM 0401 : however this guidance states that it doesn't offer protection for highly compromised patients • SHFN 30 • HAI scribe • HPS worked with HFS to produce a table of the relevant guidance applicable and gaps identified from the specification and other information provided by NHS GGC (Appendix 2) Expert Opinion/Scientific Evidence: A systematic literature review was undertaken by HPS (Appendix 1) A teleconference was held between HPS and Peter Hoffman to discuss the minimum requirements required in the provision of a safe environment for bone marrow transplant patients. Two of the most important aspects required to ensure a safe environment are that the rooms should be sealed and the air circulating should have passed through a HEPA filter. This is supported by SHTM 03-01, HTM 04-01, consensus in the scientific literature and expert opinion[1,2]. The purpose of having HEPA filtration is primarily to remove fungal spores. These require to be well fitting to ensure that any air does not bypass the filtration system. The patients within this unit should be breathing air, 100% of which has passed through HEPA filtration. There should be 2 pre filters prior to the HEPA filter. The HEPA filter should be H12 (0.3 microns)[1] and to enable this to function correctly will require a powerful fan. The room must be sealed with no ability to open windows. The room can leak clean air out however it must be protected from unfiltered air coming in. To enable this, the room must always be at positive pressure, with a rate sufficient to ensure a robust outward flow. In line with SHTM 03-01 anything from 10Pa or above is considered to be safe. In addition to having adequate pressures and to ensure safety there must be a monitoring system which allows regular monitoring of the pressure within the room. This system must have an alarm system which will alert a drop in pressure after a reasonable time lag,

Formatted: Superscript

Formatted: Superscript

	such as five minutes. To allow a robust positive pressure system the ventilation system within the rooms must be designed specifically for HEPA filters. The walls and ceilings must be sealed smooth and impervious with any access hatches securely sealed. Ceiling tiles are not recommended. In an ensuite room the clean air will pass from the main room into the bathroom, therefore the bathroom also requires to be sealed to ensure no access of unfiltered air. There are recommended air changes detailed with SHTM 03-01 of 10 per hour, this is detailed in other literature (including CDC) as 12 per hour. Air change rate is a marker of how quickly microorganisms emanating from staff and the patient are diluted. Ante rooms/Lobbies: there are no rooms within this unit which have ante rooms/lobbies. This presents a bigger challenge when the corridor is not ventilated via a HEPA filter (or to positive pressure??) and challenges the reliability of the HEPA filtered air and positive pressure within the room when the door is opened. A strict protocol which minimises the air entry via this route is required. To commission (or recommission) this unit particulate and settle plate testing should be undertaken to ensure a one off useful reassurance however what is of great importance is robust smoke testing to ensure any leaks are outwards. Ideally the corridor should also be at positive pressure however this is normally only achieved in a purpose built unit and is less important if the rooms are appropriately ventilated and robust positive pressure. The only room within this unit which requires to be at negative pressure is the “pentamidine” treatment room. From a health and safety perspective this room must be negatively pressured at - 1 ½ - to -2 I need some more advice on this one?? When the patients from this area require more intensive support they will be managed in the critical care unit (ICU/HDU). The patients should be managed in a similar positive pressure/Hepa filtered environment. Peter these are DH rooms: what are the issues with these?
Recommendation	To allow the provision of a safe environment for patients within the bone marrow transplant unit (Ward 4B) • The rooms must be positively pressured at 10 pa • ALL air entering the room must be via the HEPA filter • The HEPA filter should be H12 (0.3 micron) • The rooms must be sealed and no air which has not passed via the HEPA filter should access the room

	• There must be a pressure monitoring system for each room which alarms and gives an early indication of a pressure drop within the room • Air changes of at least 10 must be achieved • The walls and ceilings within the rooms and bathrooms should be sealed. • All access vents within the rooms/bathroom should be sealed • The pentamidine room must be negatively pressured at - 1 ½ -to -2 • There must be a room available in the critical care unit capable of providing the same level of protection s those proposed in ward 4B • A strict protocol which minimises the air entry via this route is required. • HPS will continue to provide support with this issue and subsequently the Children's unit and additional areas of ventilation concern (Critical care, ID Unit, theatres) • HPS will provide support a required relating to water control and testing in this unit

References

SHTM 03-01

SHTM 0401

Appendix 1:

Rapid review on microbial air quality in bone marrow transplant units

Introduction:
Invasive infections caused by *Aspergillus* species are relatively rare in immunocompetent hosts; however the pathogen is recognised as being the second most common cause of fungal infections in certain immunocompromised patient groups.[1] The most frequently affected patient populations include bone marrow transplantation (BMT) recipients and patients with haematological malignancies undergoing intensive chemotherapy. Prolonged neutropenia is the major risk factor for invasive aspergillosis.[1] As *Aspergillus* spp. can be readily found in the environment, it has been widely believed that aspergillosis occurs as a consequence of exogenous acquisition of the fungus.[2] *Aspergillus* spp. are ubiquitous, aerobic fungi that occur in soil, water, and decaying vegetation; the organism also survives well in air, dust, and moisture present in health-care facilities.[3]Stringent environmental controls in transplant units such as air filtration, particularly by laminar air flow (LAF) or high efficiency particulate air (HEPA) filters, has been shown to decrease the level of fungal contamination in the air and the incidence of invasive *Aspergillus* infections in immunocompromised patients.[1;4] Construction work inside or adjacent to the hospital can cause aspergillosis outbreaks, particularly if the ventilation system is faulty or if the protective measures around the construction area are not sufficient.[5-7]

Site renovation and construction can disturb *Aspergillus*-contaminated dust and produce bursts of airborne fungal spores. Increased levels of atmospheric dust and fungal spores have been associated with clusters of healthcare–associated infections in immunocompromised patients.[8] Current guidelines and standards support the use of adequately managed isolation to prevent the transmission of pathogens from the outside environment to profoundly immunocompromised patients. Such isolation consists of negative air pressure rooms (for isolating patients who are capable of transmitting infections via airborne droplets) and positive pressure rooms (for protecting immunocompromised patients susceptible to infection) fitted with HEPA filters (among other types of filters, such as ultra-low penetration air filters and medium efficiency particulate air filters) which assist in protecting immunocompromised patients.[9]
Several environmental pathogens have life-cycle forms that are similar in size to droplet nuclei and may exhibit similar behaviour in the air. The spores of *Aspergillus fumigatus* have a diameter of 2–3.5 µm, with a settling velocity estimated to be at 0.03 cm/second (or about 1 meter/hour) in still air. With this enhanced buoyancy, the spores, which resist desiccation, can remain airborne indefinitely in air currents and travel far from their source.[7;8] The spores are echinulate (spiny), increasing air resistance, to enhance wind-aided dispersion. As a result, *A. fumigatus* spores are found in unfiltered air whenever they have been sought.[7]
There are consistent recommendations for the requirements of protective environments (positive pressure rooms) for bone marrow transplant patients, these are:

- Positive pressure should be maintained at either ≥ + 10 Pa, or a pressure differential of ≥ 2.5 Pa [0.01" water gauge] in comparison to the corridor[10]

- Ventilation to maintain ≥ 10-12 air changes per hour[8,14]
- To have directed air flow (intake at one side and exhaust at opposite)[11]
- To have central or point of use HEPA filters H12 (99.97% efficiency) capable of removing particles 0.3µm in diameter for supply (incoming) air[5;8;9;11,14]

Inadequate filtration of outside air by the air handling system is the most obvious source of *Aspergillus* spores in hospital. Rhame *et al*[7] demonstrated that following introduction of 'in room' HEPA air filters *aspergillus* spores were reduced from 2 CFU/m^3 to 0.9 CFU/m^3; this reduced but did not completely prevent *aspergillus* infections in patients. The authors speculate that this is due to patients coming into contact with spores in other areas of the hospital, where corridor counts were 5 CFU/m^3. The study also discussed HEPA filtration efficiency and determined that when functioning properly all *aspergillus* spores should be removed i.e. 0 CFU/m.[3;7] A review on microbiological air quality and its association with fungal infections in haematology/oncology patients concluded that there is a clinical benefit associated with the treatment of ambient air in haematology/oncology units using HEPA filters and positive pressure, although various forms of bias were identified.[12] The study also highlighted the importance of maintenance of filtration systems and operation following manufacturer's instructions. There was no consensus regarding the maximum permissible fungal count in the air because levels varied widely between studies.[12]

What is the average CFU/m^3 during fungal outbreaks in bone marrow transplant units reported in the literature?

Environmental sampling during outbreaks has revealed a wide range of *Aspergillus* CFU/m^3. Outbreaks have occurred when *Aspergillus* spores were present at counts as low as 0.9 CFU/m^3 and up to at least 100 CFU/m^3.[9] Clusters of *Aspergillus* infections have been associated with poorly maintained or malfunctioning HEPA ventilation systems. HEPA filters should be replaced regularly based on the manufacturer's instructions and regular monitoring should be conducted during construction/renovation. In addition, high numbers of spores observed during environmental sampling could indicate contamination of the filters or air-handling system prior to installation.[11]

What is the recommended air quality (CFU/m^3) in bone marrow transplant units?

Most current guidelines are unable to present recommendations for environmental (air) sampling; this is due to the variability in the literature, variety in sampling methods and results, in addition to a lack of consensus on defined tolerable limits for microbial air contamination. [12]

The CDC suggests a threshold of 15 CFU/m^3 for total fungal counts and of <0.1 CFU/m^3 for *Aspergillus* spp. This is consistently recommended in national and international guidelines.[5;8-11;13]

Properly functioning HEPA filters with 99.97% filtering efficiency are theoretically capable of removing all *Aspergillus* spores and health facilities are required to ensure adequate maintenance of HEPA filtration systems and other appropriate types of filters with medium to high efficiency filtration.[9] There is no tolerable level/concentration for *Aspergillus* spores in HEPA filtered air samples. An exposure level of < 5 CFU/m^3 of *Aspergillus* spp. in protective isolation areas and < 0.1 CFU/m^3 in HEPA-filtered environments, with limits of 15 CFU/m^3 for total colony counts of all fungal organisms, is recommended.[2;9]

What is the optimum method for air sampling?
Active air sampling – a quantitative method, typically samples large quantities of air in a short time period. It is suggested that in highly filtered areas it may be difficult to detect low numbers of spores and that at least 1000L should be sampled.[11]
Passive air sampling (settle plates) – a qualitative method and not suitable for monitoring microbial counts in clean rooms as this method selectively collects larger particles and does not detect airborne pathogens that may remain suspended indefinitely. However, it has been suggested that settle plates are a more reliable measure of risk due to fallout onto wounds/surfaces etc. than airborne contaminants. If settle plates are used these should be in conjunction with active air sampling.[8]

Discussion:
Given the lack of conclusive evidence-based guidance in the literature, it is not possible for HPS to make a specific (CFU/m^3) recommendation on acceptable limits for microbial counts air counts on bone marrow transplant units. However, the most recent (2014) consensus guidelines[9] suggested that sampling values should be compared to a 'scientifically determined or baseline value'; a possible approach for newly commissioned haematology/oncology units in NHSScotland to determine acceptable limits for microbial air quality would be to calculate the theoretical capabilities of their air management systems to remove airborne pathogens based on known filter efficiencies and rates of air exchange. In addition, the Beatson Oncology Centre in NHS GG&C currently cares for bone marrow transplant patients and performs routine air sampling; acceptable baseline values for microbial air quality for similar units throughout NHSScotland could be determined using available routine sampling data from this unit.
The [redacted] gives additional guidance on the prevention and management of *Aspergillus* outbreaks during construction work. It was highlighted in the literature that HEPA filter installation alone is likely insufficient to guard against infection; proper maintenance must also be performed. If any preventive benefit is actually associated with the use of this type of system, this benefit will likely occur only when the equipment is operated according to the manufacturer's recommendations, using unsaturated filters.[12]
Specific construction measures have been highlighted in another study stating that in addition to a well-functioning air filtration system, infection control measures such as building protective barriers, using negative-pressure ventilation on in-hospital renovation areas and isolating the traffic to and from the construction area from other traffic are important in preventing the invasion of fungal spores to the specialist ward during construction work.[4]

Reference List

(1) Oren I, Haddad N, Finkelstein R, Rowe JM. Invasive pulmonary aspergillosis in neutropenic patients during hospital construction: before and after chemoprophylaxis and institution of HEPA filters. American Journal of Hematology 2001 Apr;66(4):257-62.

(2) Morris G, Kokki MH, Anderson K, Richardson MD. Sampling of Aspergillus spores in air. [Review] [40 refs]. Journal of Hospital Infection 2000 Feb;44(2):81-92.

(3) Pasqualotto AC, Denning DW. Post-operative aspergillosis. Clinical Microbiology and Infection 2006;12(11):November.

(4) Nihtinen A, Anttila V-J, Richardson M, Meri T, Volin L, Ruutu T. The utility of intensified environmental surveillance for pathogenic moulds in a stem cell transplantation ward during construction work to monitor the efficacy of HEPA filtration. Bone Marrow Transplantation 2007;40(5):September.

(5) Managing water safety in healthcare: A snapshot of a conference by the Royal Society for Public Health. Perspectives in Public Health 2012;132(5):September.

(6) Arnow PM, Sadigh M, Costas C, Weil D, Chudy R. Endemic and epidemic aspergillosis associated with in-hospital replication of Aspergillus organisms. Journal of Infectious Diseases 1991 Nov;164(5):998-1002.

(7) Rhame FS, Streifel AJ, Kersey JH, Jr., McGlave PB. Extrinsic risk factors for pneumonia in the patient at high risk of infection. [Review] [68 refs]. American Journal of Medicine 1984 May 15;76(5A):42-52.

(8) CDC. Guidelines for environmental infection control in healthcare facilities. 2003.

(9) Chang CC, Ananda-Rajah M, Belcastro A, McMullan B, Reid A, Dempsey K, et al. Consensus guidelines for implementation of quality processes to prevent invasive fungal disease and enhanced surveillance measures during hospital building works, 2014. [Review]. Internal Medicine Journal 2014 Dec;44(12b):1389-97.

(10) CDC. Guideline for isolation precautions: preventing transmission of infectious agents in the healthcare setting. 2007.

(11) CDC. Guidelines for preventing opportunistic infectiosn among hematopoietic stem cell transplant recipients. Recommendations of CDC, the Infectious Disease Society of America, and the American Society of Blood and Marrow Transplantation. 2000.

(12) Menegueti MG, Ferreira LR, Silva MFI, Silva ASd, Bellissimo-Rodrigues F. Assessment of microbiological air quality in hemato-oncology units and its relationship with the occurrence of invasive fungal infections: an integrative review. Revista da Sociedade Brasileira de Medicina Tropical 2013;46(4):391-6.

(13) Department of Health. Heating and ventilation systems - Health Technical Memorandum 03-01: Specialised ventilation for healthcare premises. 2007.

(14) Health Facilities Scotland. Ventilation for Healthcare Premises (part A) Design and validation. Scottish Health Technical Memorandum:03-01. 2013.

Appendix 2: this has to be completed by HFS

Table of Guidance

Guidance available 2009	Relevant to BMT Unit	Comments	Guidance in use 2013	Relevant to BMT Unit	Comments
SHTM 20-25	Ventilation- Air Changes- Room Spec- Environment- Air testing-		SHTN 03-01	Ventilation- Air Changes- Room Spec- Environment- Air testing-	
SHFN 30v.3, corresponding HAI SCRIBE	Ventilation- Air Changes- Room Spec- Environment- Air testing- Commissioning- Sign off-		SHPN 4 supp 1 HAI SCRIBE	Ventilation- Air Changes- Room Spec- Environment- Air testing- Commissioning- Sign off -	
ENDAP process implemented 2010 with the option of work that had already commenced to opt out (grace period)	Ventilation- Air Changes- Room Spec- Environment- Air testing-		ENDAP process		
HBNO4-01	Ventilation- Air Changes- Room Spec- Environment- Air testing-				

If Scottish Guidance unavailable HFS would default to English guidance.

New Southern General Hospitals

Project Manager Instruction #5453

Status: Accepted

Notification

Raised By

GGC01.NSGLP.sfrew on 9 Mar 2016 11:20AM

Raised To

BCL01

Response Required By

23 Mar 2016 12:00AM

Title

PMI 471 ADULT HOSPITAL - WARD 4B/HAEMATO-ONCOLOGY WARD - ALTERATION TO BOARD REQUIREMENTS

Description

The Board requests that BMCL establish the feasibility, estimated costs and programme of works in order to achieve the revised specification as listed below Corridor to be HEPA filtered Bathrooms to be fully sealed Room pressures to be 2.5 -8 PA ACH 6/hr Air Change in prep room 6/hr Entrance to ward to be air locked using double door at front entrance. Exit door (beside room 76) to be sealed and only used as fire exit. BMCL is also requested to confirm the timescale to complete the feasibility study.

Instruction

As above

Documents

Document Name

Bone Marrow Transplant Unit_Estates CommissionMarch16.doc

Description

Spec as signed off by User Group

File Type

application/msword

Uploaded

On 9 Mar 2016 by GGC01.NSGLP.sfrew

Document Name

PMI 471- BMCE Quote.pdf

Description

BMCE-PMI 471-QUOTATION

File Type

application/pdf

Uploaded

On 1 Apr 2016 by BCL01.NSGLP.leighj

This document states the correct information at time of production (2019/5/27 13:34).
Content is subject to change at any moment in time and cannot be used as evidence of current information. Sypro takes no responsibility for out of date information.

From: Annette Rankin
Sent: 03 March 2021 14:38
To: nss hpshaiic
Subject: FW: SBAR for the BMT NHSGGC
Attachments: SBAR BMT Adults NHSGGC oct 2017 version1 PH comments 26-10-17.docx

Follow Up Flag: Follow up
Flag Status: Completed

Bmt
For filing

From: Peter Hoffman <Peter.Hoffman[redacted]
Sent: 26 October 2017 11:54
To: RANKIN, Annette (NHS NATIONAL SERVICES SCOTLAND) <annette.rankin[redacted] KANE, Hayley (NHS NATIONAL SERVICES SCOTLAND) <hayley.kane[redacted]; MACDONALD, Laura (NHS NATIONAL SERVICES SCOTLAND) <laura.macdonald5[redacted]; STORRAR, Ian (NHS NATIONAL SERVICES SCOTLAND) <ian.storrar[redacted]
Subject: RE: SBAR for the BMT NHSGGC

Hi Annette,

A few suggestions from me – attached.

Let me know if clarification or discussion are needed.

Regards,
Peter

From: RANKIN, Annette (NHS NATIONAL SERVICES SCOTLAND) [mailto:annette.rankin[redacted]
Sent: 25 October 2017 16:04
To: KANE, Hayley (NHS NATIONAL SERVICES SCOTLAND); MACDONALD, Laura (NHS NATIONAL SERVICES SCOTLAND); STORRAR, Ian (NHS NATIONAL SERVICES SCOTLAND); Peter Hoffman
Subject:

Hi all

A draft of the SBAR for the BMT NHSGGC
I will need to format etc but would appreciate comments on content

A

[redacted]

Annette Rankin
Nurse Consultant Infection Control

NHS National Services Scotland
Health Protection Scotland

4th Floor
Meridian Court
5 Cadogan Street
Glasgow
G2 6QE
[redacted]
Reception: [redacted]
www.hps.scot.nhs.uk/

Pease consider the environment before printing this email.

NHS National Services Scotland is the common name for the Common Services Agency for the Scottish Health Service. www.nhsnss.org

****
****

This message may contain confidential information. If you are not the intended recipient please inform the
sender that you have received the message in error before deleting it.
Please do not disclose, copy or distribute information in this e-mail or take any action in relation to its contents. To do so is strictly prohibited and may be unlawful. Thank you for your co-operation.

NHSmail is the secure email and directory service available for all NHS staff in England and Scotland. NHSmail is approved for exchanging patient data and other sensitive information with NHSmail and other accredited email services.

For more information and to find out how you can switch,
[redacted]

****
The information contained in the EMail and any attachments is confidential and intended solely and for the attention and use of the named addressee(s). It may not be disclosed to any other person without the express authority of Public Health England, or the intended recipient, or both. If you are not the intended recipient, you must not disclose, copy, distribute or retain this message or any part of it. This footnote also confirms that this EMail has been swept for computer viruses by Symantec.Cloud, but please re-sweep any attachments before opening or saving. [redacted]
****

Room Number	Room Name	Design Notes	Temperature	Temperature	Temperature Notes	Temperature	Ventilation	Ventilation	Mechanical Ventilation Notes
			Winter degC	Summer degC		Relative Humidity%	Extract ac/hr	Supply ac/hr	
NCH-02-SCH-007	NCH Inpatient En-suite	The lamp repeat call is situated over the door outside the room. Where there is significant risk of assault or self-harm; fixtures; fittings and furniture need to be reviewed. Luminaires should be sufficiently robust and inherently safe for user groups. Diffusers should be tamper-proof and secure. The bin for the disposal of sanitary towels will not be required in male only facilities. SpaceNotes: If used within a multi-bed bay area; the size of this room may be reduced to 6.5 sqm if fully assisted shower or bathrooms available nearby.	22	None	-	-	10	-	-
NCH-02-SCH-008	Junior Medical Staff Office (3P)	-	21	26	26oC not to be exceeded for more than 50 hours per annum against CIBSE DSY weather data.	-	-	-	Air volume to suit occupancy at 10 litres per second per person
NCH-02-SCH-009	Lobby: air lock to bedroom	WARNING NOTICE: This room is based on a theoretical design model; which has not been validated (see paragraph 1.8 of HBN 4 Supplement 1). Specialist advice should be sought on its design. The lamp repeat call from the bedroom is situated over the door outside the room.	21	None	-	-	-	-	See HBN 04-01 Supplement 1 for further details of specific requirements.
NCH-02-SCH-010	Single bedroom: Children/young people; with relatives overnight stay	Child bed can be replaced by variable height cot - project team option. Magnetic board can be replaced by Velcro board - project team option. Maintaining safety and security; all the equipment and furniture must be safe for children. Safe for valuables - project team option.	24	26	26oC not to be exceeded for more than 50 hours per annum against CIBSE DSY weather data.	-	-	-	See HBN 04-01 Supplement 1 for further details of specific requirements.
NCH-02-SCH-011	Single bedroom: Children/young people; with relatives overnight stay	Child bed can be replaced by variable height cot - project team option. Magnetic board can be replaced by Velcro board - project team option. Maintaining safety and security; all the equipment and furniture must be safe for children. Safe for valuables - project team option.	24	26	26oC not to be exceeded for more than 50 hours per annum against CIBSE DSY weather data.	-	-	-	See HBN 04-01 Supplement 1 for further details of specific requirements.
NCH-02-SCH-012	Touchdown	Clear access space past the touchdown base should be maintained even when someone is standing at the front of the base. Where a computer is not required; the size of the worktop may be reduced to 800 mm wide and 500-600 mm deep. The following items may be provided: - alarm panel; see HTM 08-03; - lamp repeat calls for controlled drugs cupboards; - wall storage units. SpaceNotes: 2400 mm is the anticipated minimum ceiling height. Should be sized to suit surrounding area/design.	21	None	-	-	-	-	Supply air to balance extract from other areas
NCH-02-SCH-013	Lobby: air lock to bedroom	WARNING NOTICE: This room is based on a theoretical design model; which has not been validated (see paragraph 1.8 of HBN 4 Supplement 1). Specialist advice should be sought on its design. The lamp repeat call from the bedroom is situated over the door outside the room.	21	None	-	-	-	-	See HBN 04-01 Supplement 1 for further details of specific requirements.
NCH-02-SCH-014	Dirty utility: bedpan disposal & urine test	Limited space for holding of materials requiring disposal or reprocessing. Sack holder and bags quantity should be limited; once full; should be sealed and taken to the disposal hold to await collection. The space required for holding will depend on the local hospital disposal policy. Disposal of bedpans; disposal of potentially infected liquid waste; urine testing; cleansing of other items of equipment and handwashing must be zoned separately within this activity space. In HBN Accom for M.I.: Flower arrangement or disposal will be dealt within this space. In HBN Critical Care: Clinical hand wash - taps to be replaced by 'Sensor operated tap 'non-touch'. DesignNotes: In HBN23 HACh & YP; door hinge protectors are required.	18	None	-	-	10	-	-
NCH-02-SCH-015	NCH Inpatient En-suite	The lamp repeat call is situated over the door outside the room. Where there is significant risk of assault or self-harm; fixtures; fittings and furniture need to be reviewed. Luminaires should be sufficiently robust and inherently safe for user groups. Diffusers should be tamper-proof and secure. The bin for the disposal of sanitary towels will not be required in male only facilities. SpaceNotes: If used within a multi-bed bay area; the size of this room may be reduced to 6.5 sqm if fully assisted shower or bathrooms available nearby.	22	None	-	-	10	-	-
NCH-02-SCH-016	NCH Inpatient En-suite	The lamp repeat call is situated over the door outside the room. Where there is significant risk of assault or self-harm; fixtures; fittings and furniture need to be reviewed. Luminaires should be sufficiently robust and inherently safe for user groups. Diffusers should be tamper-proof and secure. The bin for the disposal of sanitary towels will not be required in male only facilities. SpaceNotes: If used within a multi-bed bay area; the size of this room may be reduced to 6.5 sqm if fully assisted shower or bathrooms available nearby.	22	None	-	-	10	-	-
NCH-02-SCH-017	Single bedroom: Children/young people; with relatives overnight stay	Child bed can be replaced by variable height cot - project team option. Magnetic board can be replaced by Velcro board - project team option. Maintaining safety and security; all the equipment and furniture must be safe for children. Safe for valuables - project team option.	24	26	26oC not to be exceeded for more than 50 hours per annum against CIBSE DSY weather data.	-	-	-	See HBN 04-01 Supplement 1 for further details of specific requirements.
NCH-02-SCH-018	Lobby: air lock to bedroom	WARNING NOTICE: This room is based on a theoretical design model; which has not been validated (see paragraph 1.8 of HBN 4 Supplement 1). Specialist advice should be sought on its design. The lamp repeat call from the bedroom is situated over the door outside the room.	21	None	-	-	-	-	See HBN 04-01 Supplement 1 for further details of specific requirements.
NCH-02-SCH-019	Lobby: air lock to bedroom	WARNING NOTICE: This room is based on a theoretical design model; which has not been validated (see paragraph 1.8 of HBN 4 Supplement 1). Specialist advice should be sought on its design. The lamp repeat call from the bedroom is situated over the door outside the room.	21	None	-	-	-	-	See HBN 04-01 Supplement 1 for further details of specific requirements.
NCH-02-SCH-020	Single bedroom: Children/young people; with relatives overnight stay	Child bed can be replaced by variable height cot - project team option. Magnetic board can be replaced by Velcro board - project team option. Maintaining safety and security; all the equipment and furniture must be safe for children. Safe for valuables - project team option.	24	26	26oC not to be exceeded for more than 50 hours per annum against CIBSE DSY weather data.	-	-	-	See HBN 04-01 Supplement 1 for further details of specific requirements.
NCH-02-SCH-021	Chemotherapy Room	3x Boxes lead lined & 1x set of Bricks lead are project specific. In preparation area; a section of worktop should be shielded in lead/plywood laminate lead equivalent thickness 1cm. Wall mounted telephone handset is required. Controlled Area warning sign.	22	25	-	-	-	-	As HBN 14 -01
NCH-02-SCH-022	NCH Inpatient En-suite	The lamp repeat call is situated over the door outside the room. Where there is significant risk of assault or self-harm; fixtures; fittings and furniture need to be reviewed. Luminaires should be sufficiently robust and inherently safe for user groups. Diffusers should be tamper-proof and secure. The bin for the disposal of sanitary towels will not be required in male only facilities. SpaceNotes: If used within a multi-bed bay area; the size of this room may be reduced to 6.5 sqm if fully assisted shower or bathrooms available nearby.	22	None	-	-	10	-	-
NCH-02-SCH-023	NCH Inpatient En-suite	The lamp repeat call is situated over the door outside the room. Where there is significant risk of assault or self-harm; fixtures; fittings and furniture need to be reviewed. Luminaires should be sufficiently robust and inherently safe for user groups. Diffusers should be tamper-proof and secure. The bin for the disposal of sanitary towels will not be required in male only facilities. SpaceNotes: If used within a multi-bed bay area; the size of this room may be reduced to 6.5 sqm if fully assisted shower or bathrooms available nearby.	22	None	-	-	10	-	-
NCH-02-SCH-024	Store Room	This store includes a mixture of shelving and racking. It represents just one example size and layout of a general store. SpaceNotes: For guidance on space allowances; see example schedules of accommodation.	16	None	-	-	-	1.5	Mechanical ventilation (supply): Mechanical ventilation required if internal location.
NCH-02-SCH-025	Parking bay: resuscitation trolley	SpaceNotes: Height to suit surrounding area.	16	None	-	-	-	-	-
NCH-02-SCH-026	Staff & communication base; open	Clear access space around the staff communication base should be maintained even when someone is standing at the front of the base. The following items may be provided: - lamp repeat calls for controlled drugs cupboards; - alarm panel; see HTM 08-03. SpaceNotes: 2400 mm is the anticipated minimum ceiling height. Should be sized to suit surrounding area/design.	22	26	26oC not to be exceeded for more than 50 hours per annum against CIBSE DSY weather data.	-	-	-	Air volume to suit occupancy at 10 litres per second per person
NCH-02-SCH-027	Single bedroom: Children/young people; with relatives overnight stay	Child bed can be replaced by variable height cot - project team option. Dispenser gloves and aprons situated on outside entrance of the room. Magnetic board can be replaced by Velcro board - project team option. Maintaining safety and security; all the equipment and furniture must be safe for children. Safe for valuables - project team option.	24	26	26oC not to be exceeded for more than 50 hours per annum against CIBSE DSY weather data.	-	-	-	Supply air rate at 40 litres per second 1. Bedroom balanced or negative with respect to the adjoining corridor. 2. Bedroom positive with respect to the en-suite sanitary room
NCH-02-SCH-028	Single bedroom: Children/young people; with relatives overnight stay	Child bed can be replaced by variable height cot - project team option. Dispenser gloves and aprons situated on outside entrance of the room. Magnetic board can be replaced by Velcro board - project team option. Maintaining safety and security; all the equipment and furniture must be safe for children. Safe for valuables - project team option.	24	26	26oC not to be exceeded for more than 50 hours per annum against CIBSE DSY weather data.	-	-	-	Supply air rate at 40 litres per second 1. Bedroom balanced or negative with respect to the adjoining corridor. 2. Bedroom positive with respect to the en-suite sanitary room
NCH-02-SCH-029	Parking bay:Equipment	The parking bay may be used for a range of mobile equipment needing no more than power socket outlets for charging purposes; including: - resuscitation trolley; - mobile hoist; - mobile X-ray machine; - wheelchair; - food trolley. SpaceNotes: 2400 mm is the anticipated minimum ceiling height. Should be sized to suit surrounding area/design.	16	None	-	-	-	-	-
NCH-02-SCH-030	Clean utility/ Clean Drug/ Clean Bay	This room represents a typical example layout of a clean utilty room of this size and type. See BS 2881 for requirements for medicines storage. See Misuse of Drugs (Safe Custody) Regulations for requirements for scheduled/controlled drugs storage. The following items may be provided: - a barcode reader and charger.	20	25	-	-	-	6	-

NCH-02-SCH-031	NCH Inpatient En-suite	The lamp repeat call is situated over the door outside the room. Where there is significant risk of assault or self-harm; fixtures; fittings and furniture need to be reviewed. Luminaires should be sufficiently robust and inherently safe for user groups. Diffusers should be tamper-proof and secure. The bin for the disposal of sanitary towels will not be required in male only facilities. SpaceNotes: If used within a multi-bed bay area; the size of this room may be reduced to 6.5 sqm if fully assisted shower or bathrooms available nearby.	22	None	-	-	10	-	-
NCH-02-SCH-032	NCH Inpatient En-suite	The lamp repeat call is situated over the door outside the room. Where there is significant risk of assault or self-harm; fixtures; fittings and furniture need to be reviewed. Luminaires should be sufficiently robust and inherently safe for user groups. Diffusers should be tamper-proof and secure. The bin for the disposal of sanitary towels will not be required in male only facilities. SpaceNotes: If used within a multi-bed bay area; the size of this room may be reduced to 6.5 sqm if fully assisted shower or bathrooms available nearby.	22	None	-	-	10	-	-
NCH-02-SCH-033	Single bedroom: Children/young people; with relatives overnight stay	Child bed can be replaced by variable height cot - project team option. Dispenser gloves and aprons situated on outside entrance of the room. Magnetic board can be replaced by Velcro board - project team option. Maintaining safety and security; all the equipment and furniture must be safe for children. Safe for valuables - project team option.	24	26	26oC not to be exceeded for more than 50 hours per annum against CIBSE DSY weather data.	-	-	-	Supply air rate at 40 litres per second 1. Bedroom balanced or negative with respect to the adjoining corridor. 2. Bedroom positive with respect to the en-suite sanitary room
NCH-02-SCH-034	Equipment Bay L	-	16	None	-	-	-	-	-
NCH-02-SCH-035	Ward Food trolley parking bay	The parking bay may be used for a range of mobile equipment needing no more than power socket outlets for charging purposes; including: - resuscitation trolley; - mobile hoist; - mobile X-ray machine; - wheelchair; - food trolley. SpaceNotes: 2400 mm is the anticipated minimum ceiling height. Should be sized to suit surrounding area/design.	16	None	-	-	-	-	-
NCH-02-SCH-036	Electrical Cupboard		None	None					
NCH-02-SCH-037	Public Ambulant WC	Where there is a significant risk of assault or self-harm; fixtures; fittings and furniture need to be reviewed. Luminaires need be sufficiently robust and inherently safe for user groups. Diffusers should be secured in place and be tamper-proof. The bin for the disposal of sanitary towels is only required in female WCs. DesignNotes: In areas used by children and young people; door hinge protectors are required	20	None	-	-	10	-	-
NCH-02-SCH-038	Store: general	This store includes a mixture of shelving and racking. It represents just one example size and layout of a general store. SpaceNotes: For guidance on space allowances; see example schedules of accommodation.	16	None	-	-	-	1.5	Mechanical ventilation (supply): Mechanical ventilation required if internal location.
NCH-02-SCH-039	Corridor		18	None					
NCH-02-SCH-039_1	Corridor		18	None					
NCH-02-SCH-040	Staff Disabled WC	The lamp repeat call is situated over the door outside the room. Where there is significant risk of assault or self-harm; fixtures; fittings and furniture need to be reviewed. Luminaires should be sufficiently robust and inherently safe for user groups. Diffusers should be tamper-proof and secure. The bin for the disposal of sanitary towels is not required in male only facilities. DesignNotes: In areas used by children and young people; door hinge protectors are required	20	None	-	-	10	-	-
NCH-02-SCH-041	Single bedroom: Children/young people; with relatives overnight stay	Child bed can be replaced by variable height cot - project team option. Dispenser gloves and aprons situated on outside entrance of the room. Magnetic board can be replaced by Velcro board - project team option. Maintaining safety and security; all the equipment and furniture must be safe for children. Safe for valuables - project team option.	24	26	26oC not to be exceeded for more than 50 hours per annum against CIBSE DSY weather data.	-	-	-	Supply air rate at 40 litres per second 1. Bedroom balanced or negative with respect to the adjoining corridor. 2. Bedroom positive with respect to the en-suite sanitary room
NCH-02-SCH-042	NCH Inpatient En-suite	The lamp repeat call is situated over the door outside the room. Where there is significant risk of assault or self-harm; fixtures; fittings and furniture need to be reviewed. Luminaires should be sufficiently robust and inherently safe for user groups. Diffusers should be tamper-proof and secure. The bin for the disposal of sanitary towels will not be required in male only facilities. SpaceNotes: If used within a multi-bed bay area; the size of this room may be reduced to 6.5 sqm if fully assisted shower or bathrooms available nearby.	22	None	-	-	10	-	-
NCH-02-SCH-043	NCH Inpatient En-suite	The lamp repeat call is situated over the door outside the room. Where there is significant risk of assault or self-harm; fixtures; fittings and furniture need to be reviewed. Luminaires should be sufficiently robust and inherently safe for user groups. Diffusers should be tamper-proof and secure. The bin for the disposal of sanitary towels will not be required in male only facilities. SpaceNotes: If used within a multi-bed bay area; the size of this room may be reduced to 6.5 sqm if fully assisted shower or bathrooms available nearby.	22	None	-	-	10	-	-
NCH-02-SCH-044	Single bedroom: Children/young people; with relatives overnight stay	Child bed can be replaced by variable height cot - project team option. Dispenser gloves and aprons situated on outside entrance of the room. Magnetic board can be replaced by Velcro board - project team option. Maintaining safety and security; all the equipment and furniture must be safe for children. Safe for valuables - project team option.	24	26	26oC not to be exceeded for more than 50 hours per annum against CIBSE DSY weather data.	-	-	-	Supply air rate at 40 litres per second 1. Bedroom balanced or negative with respect to the adjoining corridor. 2. Bedroom positive with respect to the en-suite sanitary room
NCH-02-SCH-045	Touchdown	Clear access space past the touchdown base should be maintained even when someone is standing at the front of the base. Where a computer is not required; the size of the worktop may be reduced to 800 mm wide and 500-600 mm deep. The following items may be provided: - alarm panel; see HTM 08-03; - lamp repeat calls for controlled drugs cupboards; - wall storage units. SpaceNotes: 2400 mm is the anticipated minimum ceiling height. Should be sized to suit surrounding area/design.	21	None	-	-	-	-	Supply air to balance extract from other areas
NCH-02-SCH-046	Single bedroom: Children/young people; with relatives overnight stay	Child bed can be replaced by variable height cot - project team option. Dispenser gloves and aprons situated on outside entrance of the room. Magnetic board can be replaced by Velcro board - project team option. Maintaining safety and security; all the equipment and furniture must be safe for children. Safe for valuables - project team option.	24	26	26oC not to be exceeded for more than 50 hours per annum against CIBSE DSY weather data.	-	-	-	Supply air rate at 40 litres per second 1. Bedroom balanced or negative with respect to the adjoining corridor. 2. Bedroom positive with respect to the en-suite sanitary room
NCH-02-SCH-047	NCH Inpatient En-suite	The lamp repeat call is situated over the door outside the room. Where there is significant risk of assault or self-harm; fixtures; fittings and furniture need to be reviewed. Luminaires should be sufficiently robust and inherently safe for user groups. Diffusers should be tamper-proof and secure. The bin for the disposal of sanitary towels will not be required in male only facilities. SpaceNotes: If used within a multi-bed bay area; the size of this room may be reduced to 6.5 sqm if fully assisted shower or bathrooms available nearby.	22	None	-	-	10	-	-
NCH-02-SCH-048	NCH Inpatient En-suite	The lamp repeat call is situated over the door outside the room. Where there is significant risk of assault or self-harm; fixtures; fittings and furniture need to be reviewed. Luminaires should be sufficiently robust and inherently safe for user groups. Diffusers should be tamper-proof and secure. The bin for the disposal of sanitary towels will not be required in male only facilities. SpaceNotes: If used within a multi-bed bay area; the size of this room may be reduced to 6.5 sqm if fully assisted shower or bathrooms available nearby.	22	None	-	-	10	-	-
NCH-02-SCH-049	Single bedroom: Children/young people; with relatives overnight stay	Child bed can be replaced by variable height cot - project team option. Dispenser gloves and aprons situated on outside entrance of the room. Magnetic board can be replaced by Velcro board - project team option. Maintaining safety and security; all the equipment and furniture must be safe for children. Safe for valuables - project team option.	24	26	26oC not to be exceeded for more than 50 hours per annum against CIBSE DSY weather data.	-	-	-	Supply air rate at 40 litres per second 1. Bedroom balanced or negative with respect to the adjoining corridor. 2. Bedroom positive with respect to the en-suite sanitary room
NCH-02-SCH-050	Single bedroom: Children/young people; with relatives overnight stay	Child bed can be replaced by variable height cot - project team option. Dispenser gloves and aprons situated on outside entrance of the room. Magnetic board can be replaced by Velcro board - project team option. Maintaining safety and security; all the equipment and furniture must be safe for children. Safe for valuables - project team option.	24	26	26oC not to be exceeded for more than 50 hours per annum against CIBSE DSY weather data.	-	-	-	Supply air rate at 40 litres per second 1. Bedroom balanced or negative with respect to the adjoining corridor. 2. Bedroom positive with respect to the en-suite sanitary room
NCH-02-SCH-051	NCH Inpatient En-suite	The lamp repeat call is situated over the door outside the room. Where there is significant risk of assault or self-harm; fixtures; fittings and furniture need to be reviewed. Luminaires should be sufficiently robust and inherently safe for user groups. Diffusers should be tamper-proof and secure. The bin for the disposal of sanitary towels will not be required in male only facilities. SpaceNotes: If used within a multi-bed bay area; the size of this room may be reduced to 6.5 sqm if fully assisted shower or bathrooms available nearby.	22	None	-	-	10	-	-
NCH-02-SCH-052	NCH Inpatient En-suite	The lamp repeat call is situated over the door outside the room. Where there is significant risk of assault or self-harm; fixtures; fittings and furniture need to be reviewed. Luminaires should be sufficiently robust and inherently safe for user groups. Diffusers should be tamper-proof and secure. The bin for the disposal of sanitary towels will not be required in male only facilities. SpaceNotes: If used within a multi-bed bay area; the size of this room may be reduced to 6.5 sqm if fully assisted shower or bathrooms available nearby.	22	None	-	-	10	-	-
NCH-02-SCH-053	Single bedroom: Children/young people; with relatives overnight stay	Child bed can be replaced by variable height cot - project team option. Dispenser gloves and aprons situated on outside entrance of the room. Magnetic board can be replaced by Velcro board - project team option. Maintaining safety and security; all the equipment and furniture must be safe for children. Safe for valuables - project team option.	24	26	26oC not to be exceeded for more than 50 hours per annum against CIBSE DSY weather data.	-	-	-	Supply air rate at 40 litres per second 1. Bedroom balanced or negative with respect to the adjoining corridor. 2. Bedroom positive with respect to the en-suite sanitary room
NCH-02-SCH-054	Single bedroom: Children/young people; with relatives overnight stay	Child bed can be replaced by variable height cot - project team option. Dispenser gloves and aprons situated on outside entrance of the room. Magnetic board can be replaced by Velcro board - project team option. Maintaining safety and security; all the equipment and furniture must be safe for children. Safe for valuables - project team option.	24	26	26oC not to be exceeded for more than 50 hours per annum against CIBSE DSY weather data.	-	-	-	Supply air rate at 40 litres per second 1. Bedroom balanced or negative with respect to the adjoining corridor. 2. Bedroom positive with respect to the en-suite sanitary room

NCH-02-SCH-055	NCH Inpatient En-suite	The lamp repeat call is situated over the door outside the room. Where there is significant risk of assault or self-harm; fixtures; fittings and furniture need to be reviewed. Luminaires should be sufficiently robust and inherently safe for user groups. Diffusers should be tamper-proof and secure. The bin for the disposal of sanitary towels will not be required in male only facilities. SpaceNotes: If used within a multi-bed bay area; the size of this room may be reduced to 6.5 sqm if fully assisted shower or bathrooms available nearby.	22	None	-	-	10	-	-
NCH-02-SCH-056	NCH Inpatient En-suite	The lamp repeat call is situated over the door outside the room. Where there is significant risk of assault or self-harm; fixtures; fittings and furniture need to be reviewed. Luminaires should be sufficiently robust and inherently safe for user groups. Diffusers should be tamper-proof and secure. The bin for the disposal of sanitary towels will not be required in male only facilities. SpaceNotes: If used within a multi-bed bay area; the size of this room may be reduced to 6.5 sqm if fully assisted shower or bathrooms available nearby.	22	None	-	-	10	-	-
NCH-02-SCH-057	Single bedroom: Children/young people; with relatives overnight stay	Child bed can be replaced by variable height cot - project team option. Dispenser gloves and aprons situated on outside entrance of the room. Magnetic board can be replaced by Velcro board - project team option. Maintaining safety and security; all the equipment and furniture must be safe for children. Safe for valuables - project team option.	24	26	26oC not to be exceeded for more than 50 hours per annum against CIBSE DSY weather data.	-	-	-	Supply air rate at 40 litres per second 1. Bedroom balanced or negative with respect to the adjoining corridor. 2. Bedroom positive with respect to the en-suite sanitary room
NCH-02-SCH-058	Single bedroom: Children/young people; with relatives overnight stay	Child bed can be replaced by variable height cot - project team option. Dispenser gloves and aprons situated on outside entrance of the room. Magnetic board can be replaced by Velcro board - project team option. Maintaining safety and security; all the equipment and furniture must be safe for children. Safe for valuables - project team option.	24	26	26oC not to be exceeded for more than 50 hours per annum against CIBSE DSY weather data.	-	-	-	Supply air rate at 40 litres per second 1. Bedroom balanced or negative with respect to the adjoining corridor. 2. Bedroom positive with respect to the en-suite sanitary room
NCH-02-SCH-059	NCH Inpatient En-suite	The lamp repeat call is situated over the door outside the room. Where there is significant risk of assault or self-harm; fixtures; fittings and furniture need to be reviewed. Luminaires should be sufficiently robust and inherently safe for user groups. Diffusers should be tamper-proof and secure. The bin for the disposal of sanitary towels will not be required in male only facilities. SpaceNotes: If used within a multi-bed bay area; the size of this room may be reduced to 6.5 sqm if fully assisted shower or bathrooms available nearby.	22	None	-	-	10	-	-
NCH-02-SCH-060	NCH Inpatient En-suite	The lamp repeat call is situated over the door outside the room. Where there is significant risk of assault or self-harm; fixtures; fittings and furniture need to be reviewed. Luminaires should be sufficiently robust and inherently safe for user groups. Diffusers should be tamper-proof and secure. The bin for the disposal of sanitary towels will not be required in male only facilities. SpaceNotes: If used within a multi-bed bay area; the size of this room may be reduced to 6.5 sqm if fully assisted shower or bathrooms available nearby.	22	None	-	-	10	-	-
NCH-02-SCH-061	Single bedroom: Children/young people; with relatives overnight stay	Child bed can be replaced by variable height cot - project team option. Dispenser gloves and aprons situated on outside entrance of the room. Magnetic board can be replaced by Velcro board - project team option. Maintaining safety and security; all the equipment and furniture must be safe for children. Safe for valuables - project team option.	24	26	26oC not to be exceeded for more than 50 hours per annum against CIBSE DSY weather data.	-	-	-	Supply air rate at 40 litres per second 1. Bedroom balanced or negative with respect to the adjoining corridor. 2. Bedroom positive with respect to the en-suite sanitary room
NCH-02-SCH-062	Play Room/ Dining Room	For medical gas outlets and masks storage see HBN Hosp. accom for children and young people Para 3.176 Portable dividing screen may be required. Pictorial display. Lamp indicator call situated over door outside room.	21	26	26oC not to be exceeded for more than 50 hours per annum against CIBSE DSY weather data.	-	-	-	Air volume to suit occupancy at 10 litres per second per person
NCH-02-SCH-063	Treatment room: child	Computer keyboard should be with cleanable or disposable cover.	22	25	-	-	10	10	-
NCH-02-SCH-064	Lobby: air lock to bedroom	WARNING NOTICE: This room is based on a theoretical design model; which has not been validated (see paragraph 1.8 of HBN 4 Supplement 1). Specialist advice should be sought on its design. The lamp repeat call from the bedroom is situated over the door outside the room.	21	None	-	-	-	-	See HBN 04-01 Supplement 1 for further details of specific requirements.
NCH-02-SCH-065	NCH Inpatient En-suite	The lamp repeat call is situated over the door outside the room. Where there is significant risk of assault or self-harm; fixtures; fittings and furniture need to be reviewed. Luminaires should be sufficiently robust and inherently safe for user groups. Diffusers should be tamper-proof and secure. The bin for the disposal of sanitary towels will not be required in male only facilities. SpaceNotes: If used within a multi-bed bay area; the size of this room may be reduced to 6.5 sqm if fully assisted shower or bathrooms available nearby.	22	None	-	-	10	-	-
NCH-02-SCH-066	Single bedroom: Children/young people; with relatives overnight stay	Lamp indicator call situated over door outside room Where there is a significant risk of assault or self-harm in any particular area(s) then the fixtures; fittings and furniture will need to be reviewed; but maintaining a therapeutic environment. Luminaires require to be sufficiently robust and also inherently safe for the user groups. Diffusers should be secured in place and be tamper-proof. Final selection of chair types - project team option.	24	26	26oC not to be exceeded for more than 50 hours per annum against CIBSE DSY weather data.	-	-	-	See HBN 04-01 Supplement 1 for further details of specific requirements.
NCH-02-SCH-067	Single bedroom: Children/young people; with relatives overnight stay	Lamp indicator call situated over door outside room Where there is a significant risk of assault or self-harm in any particular area(s) then the fixtures; fittings and furniture will need to be reviewed; but maintaining a therapeutic environment. Luminaires require to be sufficiently robust and also inherently safe for the user groups. Diffusers should be secured in place and be tamper-proof. Final selection of chair types - project team option.	24	26	26oC not to be exceeded for more than 50 hours per annum against CIBSE DSY weather data.	-	-	-	See HBN 04-01 Supplement 1 for further details of specific requirements.
NCH-02-SCH-068	Lobby: air lock to bedroom	WARNING NOTICE: This room is based on a theoretical design model; which has not been validated (see paragraph 1.8 of HBN 4 Supplement 1). Specialist advice should be sought on its design. The lamp repeat call from the bedroom is situated over the door outside the room.	21	None	-	-	-	-	See HBN 04-01 Supplement 1 for further details of specific requirements.
NCH-02-SCH-069	NCH Inpatient En-suite	The lamp repeat call is situated over the door outside the room. Where there is significant risk of assault or self-harm; fixtures; fittings and furniture need to be reviewed. Luminaires should be sufficiently robust and inherently safe for user groups. Diffusers should be tamper-proof and secure. The bin for the disposal of sanitary towels will not be required in male only facilities. SpaceNotes: If used within a multi-bed bay area; the size of this room may be reduced to 6.5 sqm if fully assisted shower or bathrooms available nearby.	22	None	-	-	10	-	-
NCH-02-SCH-070	NCH Inpatient En-suite	The lamp repeat call is situated over the door outside the room. Where there is significant risk of assault or self-harm; fixtures; fittings and furniture need to be reviewed. Luminaires should be sufficiently robust and inherently safe for user groups. Diffusers should be tamper-proof and secure. The bin for the disposal of sanitary towels will not be required in male only facilities. SpaceNotes: If used within a multi-bed bay area; the size of this room may be reduced to 6.5 sqm if fully assisted shower or bathrooms available nearby.	22	None	-	-	10	-	-
NCH-02-SCH-071	Lobby: air lock to bedroom	WARNING NOTICE: This room is based on a theoretical design model; which has not been validated (see paragraph 1.8 of HBN 4 Supplement 1). Specialist advice should be sought on its design. The lamp repeat call from the bedroom is situated over the door outside the room.	21	None	-	-	-	-	See HBN 04-01 Supplement 1 for further details of specific requirements.
NCH-02-SCH-072	Single bedroom: Children/young people; with relatives overnight stay	Lamp indicator call situated over door outside room Where there is a significant risk of assault or self-harm in any particular area(s) then the fixtures; fittings and furniture will need to be reviewed; but maintaining a therapeutic environment. Luminaires require to be sufficiently robust and also inherently safe for the user groups. Diffusers should be secured in place and be tamper-proof. Final selection of chair types - project team option.	24	26	26oC not to be exceeded for more than 50 hours per annum against CIBSE DSY weather data.	-	-	-	See HBN 04-01 Supplement 1 for further details of specific requirements.
NCH-02-SCH-073	Corridor		18	None					
NCH-02-SCH-073_1	Corridor		18	None					
NCH-02-SCH-074	Single bedroom: Children/young people; with relatives overnight stay	Lamp indicator call situated over door outside room Where there is a significant risk of assault or self-harm in any particular area(s) then the fixtures; fittings and furniture will need to be reviewed; but maintaining a therapeutic environment. Luminaires require to be sufficiently robust and also inherently safe for the user groups. Diffusers should be secured in place and be tamper-proof. Final selection of chair types - project team option.	24	26	26oC not to be exceeded for more than 50 hours per annum against CIBSE DSY weather data.	-	-	-	See HBN 04-01 Supplement 1 for further details of specific requirements.
NCH-02-SCH-075	Lobby: air lock to bedroom	WARNING NOTICE: This room is based on a theoretical design model; which has not been validated (see paragraph 1.8 of HBN 4 Supplement 1). Specialist advice should be sought on its design. The lamp repeat call from the bedroom is situated over the door outside the room.	21	None	-	-	-	-	See HBN 04-01 Supplement 1 for further details of specific requirements.
NCH-02-SCH-076	NCH Inpatient En-suite	The lamp repeat call is situated over the door outside the room. Where there is significant risk of assault or self-harm; fixtures; fittings and furniture need to be reviewed. Luminaires should be sufficiently robust and inherently safe for user groups. Diffusers should be tamper-proof and secure. The bin for the disposal of sanitary towels will not be required in male only facilities. SpaceNotes: If used within a multi-bed bay area; the size of this room may be reduced to 6.5 sqm if fully assisted shower or bathrooms available nearby.	22	None	-	-	10	-	-
NCH-02-SCH-077	School Room	-	21	26	26oC not to be exceeded for more than 50 hours per annum against CIBSE DSY weather data.	-	-	-	Air volume to suit occupancy at 10 litres per second per person
NCH-02-SCH-078	Senior Medical Staff Office (2P)	Suitable for senior management; (as Control Manager Office). In addition to office activities; small formal meeting may take place.	21	26	26oC not to be exceeded for more than 50 hours per annum against CIBSE DSY weather data.	-	-	-	Air volume to suit occupancy at 10 litres per second per person

NCH-02-SCH-079	NCH Assisted Bathroom	If used as a treatment bath; space is required to accommodate stretcher hoist. The lamp repeat call is situated over the door outside the room. Where there is significant risk of assault or self-harm; fixtures; fittings and furniture need to be reviewed. Luminaires should be sufficiently robust and inherently safe for user groups. Diffusers should be tamper-proof and secure. The bin for the disposal of sanitary towels will not be required in male only facilities.	22	None	-	-	10	8	-
NCH-02-SCH-080	Adjoining relatives bed space	DesignNotes: In areas used by children and young people; door hinge protectors are required	21	26	26oC not to be exceeded for more than 50 hours per annum against CIBSE DSY weather data.	-	-	-	Air volume to suit occupancy at 10 litres per second per person
NCH-02-SCH-081	Radiation shielded patient bedroom	Lamp indicator call situated over door outside room. Radiation warning signs at entrance. Display local rules. Radiation monitor at entrance to room. BARRIER AREA; Facilities at entrance to room for staff to put protective clothing and Cl.WHB. Radiation protection enclosure to include en-suite facilities. Shielding to allow hot patient to move around room. No stainless steel to be used as this reacts with the Iodine; e.g. sink or sanitary fitting; fixtures. Temporary shielding for visitors. Space may require to accommodate use of hoist. Outlet; compressed air; medical - project team option. CCTV camera linked back to Nurse Base.	22	26	26oC not to be exceeded for more than 50 hours per annum against CIBSE DSY weather data.	-	10	10	-
NCH-02-SCH-082	NCH Inpatient En-suite	Assisted access to one side of the toilet requires the second door to the en-suite bedroom to be open. See HBN 00-02. The lamp repeat call is situated over the door outside the en-suite bedroom. Where there is significant risk of assault or self-harm; fixtures; fittings and furniture need to be reviewed. Luminaires should be sufficiently robust and inherently safe for user groups. Diffusers should be tamper-proof and secure. The bin for the disposal of sanitary towels will not be required in male only facilities.	22	None	-	-	10	-	-
NCH-02-SCH-083	Secure shielded ante-room for storage of radioisotope/radioactive injection rig/radioactive waste	Warning signs Radioactive store. Refer to code of Practice for the Protection of Persons against Ionising Radiation arising from Medical & Dental use for special requirements regarding ventilation; drainage etc. Safe storage of: Iridium wire elements; Encapsulators; Calibration sources; Gold grain seeds; Type B containers & pots Isotope calibrator.	21	None	-	-	6	5	-
NCH-02-SCH-084	Radiation shielded controlled lobby	WARNING NOTICE: This room is based on a theoretical design model; which has not been validated (see paragraph 1.8 of HBN 4 Supplement 1). Specialist advice should be sought on its design. The lamp repeat call from the bedroom is situated over the door outside the room.	21	None	-	-	-	-	Supply air to make up extract air to bedroom and ensuite
NCH-02-SCH-085	Ambulant WC & Shower	Lamp indicator call situated over door outside room. If used in Mental Illness Dept.: Where there is a significant risk of assault or self-harm in any particular area(s) then the fixtures; fittings and furniture will need to be reviewed; but maintaining a therapeutic environment. Luminaires require to be sufficiently robust and also inherently safe for the user groups. Diffusers should be secured in place and be tamper-proof. If used en suite to mother and baby bedroom; nappy changing facilities can be provided.	20	None	-	-	10	-	-
NCH-02-SCH-086	Electrical Cupboard		None	None					
NCH-02-SCH-087	Cleaners Room	This room represents a typical traditional cleaners' room with space for storing a vacuum cleaner; scrubbing/polishing machine (for hard floors) and mop and bucket (stored on the cleaners' trolley). It includes a combined bucket sink and hand-rinse basin (janitorial unit) and separate sink. If large equipment is stored elsewhere; the size of this room can be reduced.	16	None	-	-	6	-	-
NCH-02-SCH-088	Data Management & BMT Compliance Office (4P)	-	21	26	26oC not to be exceeded for more than 50 hours per annum against CIBSE DSY weather data.	-	-	-	Air volume to suit occupancy at 10 litres per second per person
NCH-02-SCH-089	Interview & counselling room	Furniture subject to project specific requirements (e.g. settee or chairs). Where this room is to be used for interviews requiring a writing surface; the coffee table may be substituted by a desk & chair desk. In ENT & Audiology clinics - mother may use this room to breast feed her baby.	21	26	26oC not to be exceeded for more than 50 hours per annum against CIBSE DSY weather data.	-	-	-	Air volume to suit occupancy at 10 litres per second per person
NCH-02-SCH-090	Pantry: serving ward	This room does not include space for a regeneration trolley.	18	None	-	-	6	5	Minimum air changes per hour (AC/hr): 6
NCH-02-SCH-091	Corridor		18	None					
NCH-02-SCH-092	Hospital at Night Office (2P)	The following equipment is shown on the room layout but is optional: - lamp repeat calls for controlled drugs cupboards (but required if the office is used for clinical control). The following items may be provided if the office is used for clinical control: - a small safe; - a key cupboard; - an alarm panel; see HTM 08-03. A dimming switch is recommended if the room is used for viewing digital images.	21	26	26oC not to be exceeded for more than 50 hours per annum against CIBSE DSY weather data; but not on successive days.	-	-	-	Air volume to suit occupancy at 10 litres per second per person
NCH-02-SCH-093	Seminar Room	Chair upright with arms can be replaced by chair with writing arm - project team option. Rail around room for flip charts to hang on during seminar. In HBN A&E; This room can also be used as a base for a clinical nurse teacher. In HBN Maternity - omit X-ray illuminator.	21	26	26oC not to be exceeded for more than 50 hours per annum against CIBSE DSY weather data; but not on successive days.	-	-	-	Air volume to suit occupancy at 10 litres per second per person
NCH-02-TCT-001	Corridor		18	None					
NCH-02-TCT-002	Contingency	-	21	None	-	-	-	-	-
NCH-02-TCT-003	Single bedroom: Children/young people; with relatives overnight stay	Child bed can be replaced by variable height cot - project team option. Dispenser gloves and aprons situated on outside entrance of the room. Magnetic board can be replaced by Velcro board - project team option. Maintaining safety and security; all the equipment and furniture must be safe for children. Safe for valuables - project team option.	24	26	26oC not to be exceeded for more than 50 hours per annum against CIBSE DSY weather data.	-	-	-	Supply air rate at 40 litres per second 1. Bedroom balanced or negative with respect to the adjoining corridor. 2. Bedroom positive with respect to the en-suite sanitary room
NCH-02-TCT-004	NCH Inpatient En-suite	The lamp repeat call is situated over the door outside the room. Where there is significant risk of assault or self-harm; fixtures; fittings and furniture need to be reviewed. Luminaires should be sufficiently robust and inherently safe for user groups. Diffusers should be tamper-proof and secure. The bin for the disposal of sanitary towels will not be required in male only facilities. SpaceNotes: If used within a multi-bed bay area; the size of this room may be reduced to 6.5 sqm if fully assisted shower or bathrooms available nearby.	22	None	-	-	10	-	-
NCH-02-TCT-005	NCH Inpatient En-suite	The lamp repeat call is situated over the door outside the room. Where there is significant risk of assault or self-harm; fixtures; fittings and furniture need to be reviewed. Luminaires should be sufficiently robust and inherently safe for user groups. Diffusers should be tamper-proof and secure. The bin for the disposal of sanitary towels will not be required in male only facilities. SpaceNotes: If used within a multi-bed bay area; the size of this room may be reduced to 6.5 sqm if fully assisted shower or bathrooms available nearby.	22	None	-	-	10	-	-
NCH-02-TCT-006	Single bedroom: Children/young people; with relatives overnight stay	Child bed can be replaced by variable height cot - project team option. Dispenser gloves and aprons situated on outside entrance of the room. Magnetic board can be replaced by Velcro board - project team option. Maintaining safety and security; all the equipment and furniture must be safe for children. Safe for valuables - project team option.	24	26	26oC not to be exceeded for more than 50 hours per annum against CIBSE DSY weather data.	-	-	-	Supply air rate at 40 litres per second 1. Bedroom balanced or negative with respect to the adjoining corridor. 2. Bedroom positive with respect to the en-suite sanitary room
NCH-02-TCT-007	Single bedroom: Children/young people; with relatives overnight stay	Child bed can be replaced by variable height cot - project team option. Dispenser gloves and aprons situated on outside entrance of the room. Magnetic board can be replaced by Velcro board - project team option. Maintaining safety and security; all the equipment and furniture must be safe for children. Safe for valuables - project team option.	24	26	26oC not to be exceeded for more than 50 hours per annum against CIBSE DSY weather data.	-	-	-	Supply air rate at 40 litres per second 1. Bedroom balanced or negative with respect to the adjoining corridor. 2. Bedroom positive with respect to the en-suite sanitary room
NCH-02-TCT-008	NCH Inpatient En-suite	The lamp repeat call is situated over the door outside the room. Where there is significant risk of assault or self-harm; fixtures; fittings and furniture need to be reviewed. Luminaires should be sufficiently robust and inherently safe for user groups. Diffusers should be tamper-proof and secure. The bin for the disposal of sanitary towels will not be required in male only facilities. SpaceNotes: If used within a multi-bed bay area; the size of this room may be reduced to 6.5 sqm if fully assisted shower or bathrooms available nearby.	22	None	-	-	10	-	-
NCH-02-TCT-009	NCH Inpatient En-suite	The lamp repeat call is situated over the door outside the room. Where there is significant risk of assault or self-harm; fixtures; fittings and furniture need to be reviewed. Luminaires should be sufficiently robust and inherently safe for user groups. Diffusers should be tamper-proof and secure. The bin for the disposal of sanitary towels will not be required in male only facilities. SpaceNotes: If used within a multi-bed bay area; the size of this room may be reduced to 6.5 sqm if fully assisted shower or bathrooms available nearby.	22	None	-	-	10	-	-
NCH-02-TCT-010	Single bedroom: Children/young people; with relatives overnight stay	Child bed can be replaced by variable height cot - project team option. Dispenser gloves and aprons situated on outside entrance of the room. Magnetic board can be replaced by Velcro board - project team option. Maintaining safety and security; all the equipment and furniture must be safe for children. Safe for valuables - project team option.	24	26	26oC not to be exceeded for more than 50 hours per annum against CIBSE DSY weather data.	-	-	-	Supply air rate at 40 litres per second 1. Bedroom balanced or negative with respect to the adjoining corridor. 2. Bedroom positive with respect to the en-suite sanitary room
NCH-02-TPB-001	Clinical Workroom	Shelving to be at height to allow trolley parking underneath.	16	None	-	-	6	-	-
NCH-02-TPB-002	Laundry/Drying Room	-	21	26	26oC not to be exceeded for more than 50 hours per annum against CIBSE DSY weather data.	-	10	-	-
NCH-02-TPB-003	Trolley Store	-	16	None	-	-	-	1.5	Mechanical ventilation (supply): Mechanical ventilation required if internal location.
NCH-02-TPB-004	Clothing Store	-	16	None	-	-	1.5	-	-
NCH-02-TPS-001	Telephone Services		None	None	-				Air volume to suit occupancy at 10 litres per second per person
NCH-02-TPS-001_1	ICT Workshop		21	26	26oC not to be exceeded for more than 50 hours per annum against CIBSE DSY weather data.				
NCH-02-TPS-001_2	Telecom Workshop		21	26	26oC not to be exceeded for more than 50 hours per annum against CIBSE DSY weather data.				
NCH-02-TPS-002	Mechanical Riser M6		None	None					
NCH-02-TPS-003	Riser		None	None					

From: Inkster Teresa (NHS GREATER GLASGOW & CLYDE)
To: Armstrong, Jennifer
Subject: FW: QEUH Ward 4b BMT Alteration Proposals
Date: 04 May 2016 17:17:01

Hi Jennifer - see below for an update on adult BMT . I need to discuss one aspect of this with you further.

The specification that I put forward for the feasibility study was a compromise and did not include all of the HPS recommendations - in particular we were unable to achieve the recommended positive pressures of 10PA and 10 air changes per hour in the patients rooms. We currently have 6 of each.

The two most important aspects of the specification I put forward were completely sealed rooms and a HEPA filtered corridor. We can acheive the former but HEPA filtration of the corridor is problematic - see point 2 below. There is a risk associated with not having a HEPA filtered corridor. Because the positive pressure in the rooms is less than desired 10PA when the room doors open there is a risk of ingress of contaminated air - because there is no HEPA filtration this includes fungal spores . We could solve this by creating anterooms but we don't have the space to do so .

This situation leaves us some way off the HPS recommendations . Would be good to discuss this with you at some point. Apologies you couldn't get me earlier today - I was at a lengthy IMT in HPS re Staph epi!

Kind regards
Teresa

Dr Teresa Inkster
Lead Infection Control Doctor NHSGGC
Training Programme Director Medical Microbiology
Dept of Microbiology
Queen Elizabeth University Hospital
Glasgow
[redacted]

From: Russell, Steve [Steve.Russel[redacted]
Sent: 03 May 2016 11:12
To: Mccolgan Melanie (NHS GREATER GLASGOW & CLYDE); Inkster Teresa (NHS GREATER GLASGOW & CLYDE); Parker, Anne; McQuaker, Grant; McArdle, Alyson; Campbell Myra (NHS GREATER GLASGOW & CLYDE); Powrie Ian (NHS GREATER GLASGOW & CLYDE)
Cc: Loudon David (NHS GREATER GLASGOW & CLYDE)
Subject: RE: QEUH Ward 4b BMT Alteration Proposals

Morning all,

Further to our recent meeting on the proposals for the above, I would like to confirm our understanding of the current agreement and seek your approvals to proceed on this basis.

Costs have to be sought to reflect the following amended scope of works which relates to the Brookfield Multiplex Feasibility Report PMI 475:

1. Entrance air lock to be created with interlocked doors through what is currently the Interview Room (HOW-203). This lobby is to be negatively pressured in relation to the corridor space within the unit.
2. Due to the physical limitations, no additional supply air will be introduced into the internal corridors, however, the current HEPA filtered air spilling from the bed rooms will provide 4 air changes of HEPA filtered air within the corridors. All current rooms that are not Bedded Rooms and that are not equipped with HEPA filtered supply air shall be made negative to the internal corridors to prevent contamination of the corridor air. It is appreciated this does not meet the full Infection Control requirements but it is understood the appropriate approval shall be sought by Teresa and if required the local operational policy will be amended to accommodate this.
3. The Prep Room HOW 039 shall be fitted with a solid ceiling, HEPA filtration and made positive to the internal corridor at 6 air changes per hour and at a differential pressure of 4 – 6pa.
4. An independent standby air handling unit (AHU) and extract unit is to be provided to ensure a continued protected environment during periods of plant maintenance or failure.
5. The video intercom entry system to be relocated to the new interlocked entrance.
6. All doors other than the interlocked doors to the unit are to be secured and facilitate emergency egress only.
7. Signage to be altered to reflect the revised ward access through the interlock facility.

Could I request that everyone on the circulation list confirms that above is accurate please?

Regards

Steve Russell
Senior Project Manager

[redacted]

From: Russell, Steve
Sent: 25 April 2016 17:17
To: Russell, Steve; McColgan, Melanie; Inkster, Teresa (NHSmail)
Cc: Parker, Anne; McQuaker, Grant; McArdle, Alyson; Campbell, Myra
Subject: RE: BMT

Hi All,

The meeting has been arranged for 9am in the QEUH LEVEL 1 Stroke Ward Seminar Room STW-011.

Regards

Steve Russell
Senior Project Manager

[redacted]

From: Russell, Steve
Sent: 25 April 2016 17:03
To: McColgan, Melanie; Inkster, Teresa (NHSmail)
Cc: Parker, Anne; McQuaker, Grant; McArdle, Alyson; Campbell, Myra
Subject: RE: BMT

I'll get see about getting a meeting space arranged and get back to everyone. Can we set a time in the diaries for 9am, shouldn't take longer than an hour?

Regards

Steve Russell
Senior Project Manager

[redacted]

From: McColgan, Melanie
Sent: 25 April 2016 16:38
To: Russell, Steve; Inkster, Teresa (NHSmail)
Cc: Parker, Anne; McQuaker, Grant; McArdle, Alyson; Campbell, Myra
Subject: FW: BMT

Steve
Can you confirm venue please for Weds am.
Thanks
Melanie

From: Campbell, Myra
Sent: 25 April 2016 16:34
To: McColgan, Melanie
Subject: Re: BMT

Anne , Grant and I are available Wed. from 8.30am. Anne available until 10am , Grant available until 10.30am. Myra

****
Sent from a NHSGG&C BlackBerry device
****

From: McColgan, Melanie
Sent: Monday, April 25, 2016 04:25 PM GMT Standard Time
To: McQuaker, Grant; Parker, Anne; Campbell, Myra; McArdle, Alyson
Cc: Inkster, Teresa (NHSmail); Russell, Steve
Subject: FW: BMT

Dear all
For info – trying to arrange follow up meeting – Is Wednesday morning any good? Friday am is also an option for Steve and Teresa but I can't currently make that,
M

From: Russell, Steve
Sent: 25 April 2016 13:51
To: McColgan, Melanie; Inkster, Teresa (NHSmail)
Subject: RE: BMT

Hi Melanie,

Please find attached the report that was received on Friday pm. We note that the financial information has still to follow, we're currently pursuing this.

I think it would be worthwhile meeting up again particularly with yourself and Teresa as there seems there could be some limitations as we expected? How are you both placed for this week?

Regards

Steve Russell
Senior Project Manager

[redacted]

From: McColgan, Melanie
Sent: 25 April 2016 11:16
To: Russell, Steve
Subject: BMT

Hi Steve
Conscious the 4 weeks is now up and we should have received the output of the feasibility study?
Thanks

Melanie

General Manager
Specialist Oncology and Clinical Haematology
NHS Greater Glasgow and Clyde
[redacted]

No virus found in this message.
Checked by AVG - www.avg.com
Version: 2016.0.7539 / Virus Database: 4556/12068 - Release Date: 04/20/16

No virus found in this message.
Checked by AVG - www.avg.com
Version: 2016.0.7539 / Virus Database: 4556/12068 - Release Date: 04/20/16

****
NHSGG&C Disclaimer
The information contained within this e-mail and in any attachment is confidential and may be privileged. If you are not the intended recipient, please destroy this message, delete any copies held on your systems and notify the sender immediately; you should not retain, copy or use this e-mail for any purpose, nor disclose all or any part of its content to any other person.
All messages passing through this gateway are checked for viruses, but we strongly recommend that you check for viruses using your own virus scanner as NHS Greater Glasgow & Clyde will not take responsibility for any damage caused as a result of virus infection.
****

****

This message may contain confidential information. If you are not the intended recipient please inform the sender that you have received the message in error before deleting it.
Please do not disclose, copy or distribute information in this e-mail or take any action in reliance on its contents:
to do so is strictly prohibited and may be unlawful.

Thank you for your co-operation.

NHSmail is the secure email and directory service available for all NHS staff in England and Scotland
NHSmail is approved for exchanging patient data and other sensitive information with NHSmail and GSi recipients
NHSmail provides an email address for your career in the NHS and can be accessed anywhere

****

Louise Mackinnon

From: Peters, Christine
Sent: 25 July 2016 10:47
To: Inkster, Teresa (NHSmail)
Subject: Infection COntrol HAndover 25july
Attachments: Infection COntrol HAndover 25july.docx

Follow Up Flag: Follow up
Flag Status: Flagged

Hi Teresa,

Please find attached a brief handover of IC issues encountered over last 3 weeks.

I can send on all notes and relevant emails as required – I don't want to deluge you immediately.

Kr
Christine

HANDover July 25/07

Dr Christine Peters – Acting ICD lead for 3 weeks

Updates in BLUE from previous June Handover

Woman's and children's

1) **Cupriavidus pauculus in aseptic pharmacy RHC**

Colonisation of water from 2 sinks (corridor and changing room) persisting for several months. One patient related bacteraemia – child on TPN – typing revealed same strain as water samples. IMT held 21/06 . Practice issues – dirty water and TPN discarded down HH sink amongst others. Water to be dosed with Sanosil and resampled. Temporary alert on ICNet for Cupriavidus bacteremia . Further IMT will be required if any more patient cases. Pamela has all the details relating to this incident.

Sometimes after dosing and biofilm disruption counts can be very high – if so I would resample in first instance to see if coming down. If not dose again .

No update

2) **Fungal infections haematology**

Brenda Gibson, Cons haem asked for review of 5 patients with suspected fungal infections. 3 of these were considered possible based on radiology and reviewed further by ICT. All 3 colonised with Candida sp + one with positive Candida BC – I have suggested to Brenda that all might be explained by Candida rather than Aspergillus which she was concerned about. Aspergillus PCRs are negative. Pamela has patient details if any questions.

No update

3) **Acinetobacter in PICU**

2 x Acinetobacter in PICU from weekend of June18/19, same antibiogram. Patients at opposite ends of units. Both had bronchoscopy – procedures being reviewed. If 3rd case a meeting to discuss would be appropriate. Pamela aware.

I have not been informed of any new cases

4)Mycobacterium in cardiac bypass water coolers

Positive result last month for the first time at RHC. Machine out of use. Protocols for sampling being written by me – these can wait until I get back. No risk to patients as machine out of use. If any more positives take machine out of use and follow decontamination protocols which perfusionists have.

No update

5) Increased C section SSIs

Meeting held June 15th to discuss increased C section SSIs in PRM and QEUH in April. Lots of actions including review of antibiotic prophylaxis which is ongoing. Next meeting in August unless further increases in cases. Sandra has minutes.

No further actions

6) Paediatric BMT

2 options for ventilation spec provided - either modification of PPVL rooms or conversion to positive pressure rooms. I have requested spec for positive pressure rooms – this would be the preferred option and no difference in cost apparently. Meeting to be held with clinical team to discuss. I would try to delay this until I get back if possible.

Monthly air sampling is in place on the unit. Room 24 currently has high fungal counts - 15 colonies – ID awaited and I have placed it out of use. It will be cleaned and resampled. Rooms 20 + 23 are also out of use - I am not sure why , I have asked estates to clarify if there is an issue with the ventilation. Clinical team keen to open but I would check with Ian Powrie first if asked.

Room 24 had a second post clean high fungal count, I requested that Estates investigate this by checking ventilation parameters and filter checks . DOPS testing showed that the media was not passing through the HEPA filter but was ingressing into the room. I requested that this result be investigated by examination of the vent ducts and on opening the hatch Estates identified:

1. A large tear in a flexible section of ducting
2. A number of points that had not been sealed

This means that unfiltered air had been ingressing into the patient bedroom and would explain the high particle and fungal counts. The room remains closed.

Room 20 and 23 were closed due to the need to have the doors changed due to the blinds being broken. This work was not completed and we agreed that only when the work was completed and the air re sampled could these rooms be re-opened.

Routine testing regime identified fungus in room 18. This room was cleaned and re-sampled.

I was informed that you have a meeting with David Louden to discuss these rooms and therefore further actions were not taken. I think the information regarding the missing seals will need to be taken into consideration.

7) Serratia

4 new cases of Serratia in NICU last week. IMT to be held Friday 23rd – I will update after

3 IMTS were held – all chaired by Sandra. Last update I had 8 cases were identified and SG asked for a report despite green HIATT.

After the 6th case further environmental sampling took place. My only involvement has been to organise extended water testing – as previously only 4 taps in room 5 were tested. All outlets are now being tested on the unit, and I am waiting to hear if this has been completed. Pre and post flush regime was used and plates for Serratia and Pseudomona only. TVCs had been done previously and were high. I asked Ian about this, but this is an outstanding matter.

8. PICU staff member has been identified with a boil MRSA PVL positive and I have advised stay off work until decolonisation and 2 negative screens as per policy. No cases in PICU identified, Carol, Kathleen and Pamela all aware, but no details regarding name has been shared – Pauline dealt directly with GP.

9. Big issue with condensation occurring on chiller beams in patient rooms throughout RHC and QEUH adults last week due to hot humid weather and a fault in the BMS system. This meant that water was condencing onto the beams, and dripping through dirty grills into the patient rooms. Pamela was heavily involved at RHC site and will update you.

8. PICU

HAI pseudomonas – Pamela followed policy and tested water regimes. No further testing carried out.emails available.

Regional

1 Neurosurgical theatres

No recent water leaks. HPS signed off all theatres for use. Surveillance for SSIs ongoing. Meeting was held to discuss SSI rates – follow up meeting when I get back unless spike in cases. Attending meeting Friday 23rd to sign off plans for new neurosurgical theatres in ICE buildings – not expecting any problems – plans are now fully compliant with HBN 24.

Spike in cases – post spinal 6 cases in june , giving 6.8% rate. IMT called – minutes will be sent to you. None of these cases were picked up by surveillence due to codes not being included. Neuro surgeons raised concerns re rates and being missed by surveillance. Surveillance nurse started and now all codes are included from 1st July.

Lots of issues with HAISCRIBES and the amount of work going on in that building – details will be sent separately, but it was clear that negative pressure was NOT being used in the area adjacent to the theatres. Contractors agreed to ensure negative pressure for all future works in that area.

Minutes and actions awaited from Calum.

2. Critical care isolation rooms

ID physicians wrote letter expressing concern about these PPVL rooms. They are currently under review by HPS/HFS. Questions asked were – are these rooms suitable for ID patients with airborne infection particularly MERs and MDRTB. If so are they suitable with the design modifications that we have made. If the answers are no Anne Harkness plans to chair a meeting on contingency planning with ID and ICU physicians. Sandra/Tom have SBAR if needed.

I HAVE HAD NUMEROUS QUERIES RE THESE ROOMS, Tom and Sandra said no SBAR available.

I am doing walk round re MERS planning so it would be good to have an update

3. Air changes in QEUH

Decision was made to reduce air changes in all patient rooms from 6/hr to 3/hr. High risk areas have been identified and appropriate measures implemented. Sandra/Tom have SBAR if needed

No SBAR – I asked as again TB isolation is a problem. We need a very clear message re this.

4. Legionella level 4 renal

Low level Legionella colonisation of water supply in level 4 renal . Legionella species not serogroup 1 or 2-14, so low risk to patients. System dosed with Sanosil – again repeat counts might be high so I would resample if that's the case. If need to repeat dose need to make sure emergency dialysis points (5 of them) are not in use as Sanosil can lead to fatal haemolysis in dialysis patients. John Hood should be able to advise if any probs.

Repeat testing still high, repeat dosing carried out.

I requested that the work to test for magnetic bits of piping be followed through, and taps be disinfected.

Noted that there are other dialysis points that are attached to mains supply and not RO.? In ITU

I have asked Ian to identify these so that risk can be managed through water safety and renal quality management

5. Adult BMT

Teleconference with medical director, facilities and clinicians held to discuss on 23/6/16. ICT not in a position to sign off unless following criteria met – solid ceilings in bathrooms - solid with access hatch(tiles with sealant not acceptable) , air changes of **minimum** 10/hour and positive pressure 8-10PA. David Loudon to look at feasibility. I would not sign this off – leave any decision until I get back . Sandra and Tom aware of details.

No update

6. Beatson, GGH

Lots of building construction and demolition due to take place on site. Recommendation from ICT is to close front entrance of BOC and have patients coming in either side entrance or Tom Wheldon building. Monthly air sampling on top floor of BOC will continue. I have asked contractors to provide ICT with demolition methods statement which should contain details of dust and vermin control measures. Alison attending meeting on my behalf June 28th to discuss further.

No update on these building works

IMT called due to spike in VRE blood culture results – 6 in a month , with a background rate of less than 1 a month, all from PICC/Hickman lines.

Screening of environment and all patients on top floor. Environmental all negative. 10/21 positive

All isolates sent for typing. HIATT Green at meeting, however may need rapid review to amber with screening results

Line insertions – issues with treatment room used picked up by Aleks doing walk around

Minutes and actions available

Aleks has agreed to be the point of contact for any results from the GRI environmental lab that would normally come to me.

QEUH

1. ITU Damp remediation work – black mould found on window frame. All work completed with excellent HAISCRIBE measures in place. No further cases that I know of
2. PICC line infections – concerns re PICC line infection rates raised by Neil Ritchie. I think we need a good review of line insertion practices. Widespread concerns re use of vygon lines and access points. Would be good for ICD to go to PICC line subgroup along with Sandra
3. Opthalmitis – 1 case post intra vitreal injection infection identified by ALeks, – list generated – Aleks looking into 4 further cases across sites. Walk round treatment room identified questions regarding ventilation.
4. M abscessus , further IMT, no new cases, interim policy to be circulated.
5. Renal unit- in checking VREs to compare with Beatson noted that BCs in renal not included in SPC charts, ICNs close case if no loose stool - ? need to review
6. C diff trigger due to 2 cases on ITU – typing outstanding , opnly action was to instigate ventilation grille cleaning schedule – HAISCRIBE to be written

CLYDE

1. C-Section rates high again and IMT called – Linda and Joan dealt with it – I have no updates
2. Legionella Sero group 01- in Inverclyde water outlets – actions in place as per policies but I think need a more definitive approach

From: Armstrong, Jennifer
Sent: 07 August 2021 19:13
To: Shariff, Imran
Subject: FW: QEUH - Ward 4B BMT
Attachments: Proposed Works June 16.doc

From: McColgan, Melanie
Sent: 30 June 2016 08:57
To: Parker, Anne; Loudon, David; Armstrong, Jennifer; Inkster, Teresa (NHSmail); Jenkins, Gary; McQuaker, Grant
Cc: Clark, Andrew; Irvine, David; Novitzky-Basso, Igor
Subject: RE: QEUH - Ward 4B BMT

Hi
I have attached updated report based on changes discussed last week,
Regards
Melanie

From: Parker, Anne
Sent: 24 June 2016 13:02
To: Loudon, David; Armstrong, Jennifer; Inkster, Teresa (NHSmail); Jenkins, Gary; McColgan, Melanie; McQuaker, Grant
Cc: Clark, Andrew; Irvine, David; Novitzky-Basso, Igor
Subject: RE: QEUH - Ward 4B BMT

Thanks David and everyone else for the time yesterday
Apologies for letting my frustration show yesterday, but we are not much further forward than we were a year ago and still have no time frame for our return to the QEUH site.

As a thought we discussed that all eventualities should be looked at

- One option that has been raised previously, but was not discussed yesterday was moving the unit up to the 11th floor of the QEUH and swapping with one of the wards up there. This I would have thought would be less disruptive to the rest of the hospital and move us nearer the plant room and maybe allow some further improvement in the design.

Our immediate concerns are about the safe everyday management of acutely sick patients and rapid review of these patients on the GGH site. We are compromising care all the time we stay there, there have not been any obvious disasters, but this by dint of shuttling patients to and fro between the sites, which in itself brings risk. We are faced every day with the choice of moving patients to unfiltered areas to be managed in the Beatson high acuity unit or off site in an ambulance to HDU/ITU with all the inherent concerns about communication, drugs etc. when moving to a new nursing team at a time of high stress for patients. We are going to have to make hard decisions about who it is safe to transplant on the Beatson site and some patients will either have to go south of the border or not be transplanted.
Regards
Anne

Dr Anne Parker, Consultant Haematologist
Dept Haematology
Queen Elizabeth University Hospital
[redacted]

From: Loudon, David
Sent: 23 June 2016 14:24
To: Armstrong, Jennifer; Inkster, Teresa (NHSmail); Parker, Anne; Jenkins, Gary; McColgan, Melanie
Subject: QEUH - Ward 4B BMT

Colleagues

As agreed at out meeting this morning, I have agreed to:

- Confirm the capability and capacity of the existing M&E system to provide positive room pressure at a range of 8 – 10 pascal
- Confirm the capability and capacity of the existing M&E system to provide room air changes per hour at a minimum of 10
- The provision of a solid ceiling in the ensuite rooms will be straight forward

I agree to endeavour to provide initial feedback at the end of business tomorrow and have subsequently arranged a meeting with the contractors design manager at 4pm today.

Regards

David

David W. Loudon, MCIOB, CBIFM, MBA
Director of Facilities and Capital Planning
NHS Greater Glasgow & Clyde
Corporate Headquarters
JB Russell House
Gartnavel Royal Hospital
Glasgow
G12 0XH

[redacted]
E mail: David.Loudon[redacted]

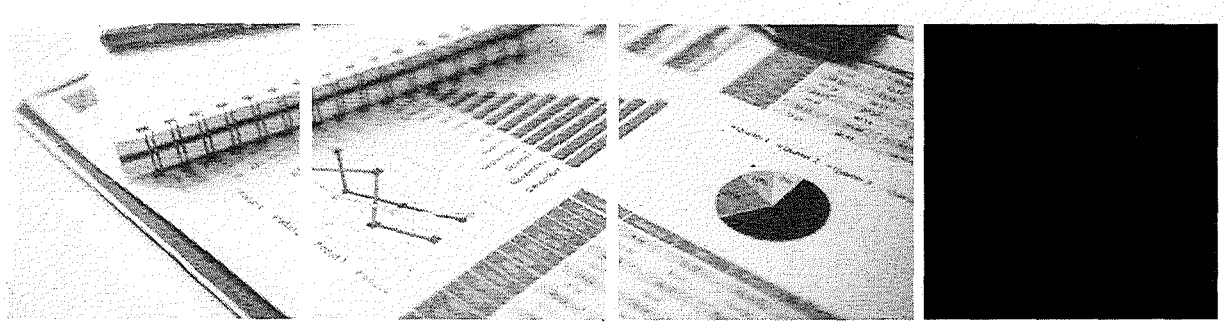

NHS Greater Glasgow & Clyde

Bone Marrow Transplant (BMT) Unit

Feasibility Study
NM/20161128/202112/FS_A/v1

Contents

1. Introduction 1
2. Team Structure 2
3. Schedule of Accommodation 4
4. Maternity Building 5
5. Maternity Building – Option 1 6
6. Neurology Building 9
7. Neurology Building – Option 1 10
8. Neurology Building – Option 2 13
9. Neurology Building – Option 3 16
10. Budget Costs 19
11. Summary 20

Appendices

Appendix A – Schedule of Accommodation
Appendix B - Maternity
Appendix C - Neurology Option 1
Appendix D - Neurology Option 2
Appendix E - Neurology Option 3

1. Introduction

The existing BMT Unit is currently located in the Beatson West of Scotland Cancer Centre at Gartnavel Hospital in Glasgow's West End. The BMT Unit was due to transfer to the 4th floor of the Queen Elizabeth University Hospital (QEUH), however its infrastructure cannot support the necessary BMT Unit requirements and alterations to existing services within the 4th floor is unfeasible.

NHS GG&C have therefore commissioned a feasibility study to investigate a new suitable location for the Bone Marrow Transplant (BMT) Unit within the Queen Elizabeth University Hospital (QEUH) Glasgow campus.

Feasibility Study Scope

The Project Board has highlighted two buildings as potential locations for the BMT Unit. These are the Maternity building and Neurology building.

The scope of this report provides a review of opportunities available for these buildings with four outline proposals as follows:

1. Maternity – A new additional floor with associated plant.
2. Neurology Option 1 – A refurbishment of the existing first and second floor
3. Neurology Option 2 – A refurbishment of the existing ground and first floor
4. Neurology Option 3 – A refurbishment of the ground floor and with a new build extension

The report provides a detailed analysis of the challenges and benefits of each outline proposal, looking at architectural, structural, mechanical and electrical services.

This document has been prepared in discussion with representatives from NHS GG&C, Beatson West of Scotland Cancer Centre and members of the Design Team.

Pic 1: Maternity Building

Pic 2: Neurology Building

A49618520

2. Team Structure

In order to progress the feasibility study, the following design team have been appointed to participate in the development and appraisal of options.

Currie & Brown - Project Managers

BMJ - Architects

Hulley & Kirkwood - Mechanical and Electrical Engineers

Harley Haddow - Structural Engineers

The existing knowledge of these buildings was able to add value to the process, particularly when assessing the key risks and constraints to the proposed project works.

The team structure is shown below:

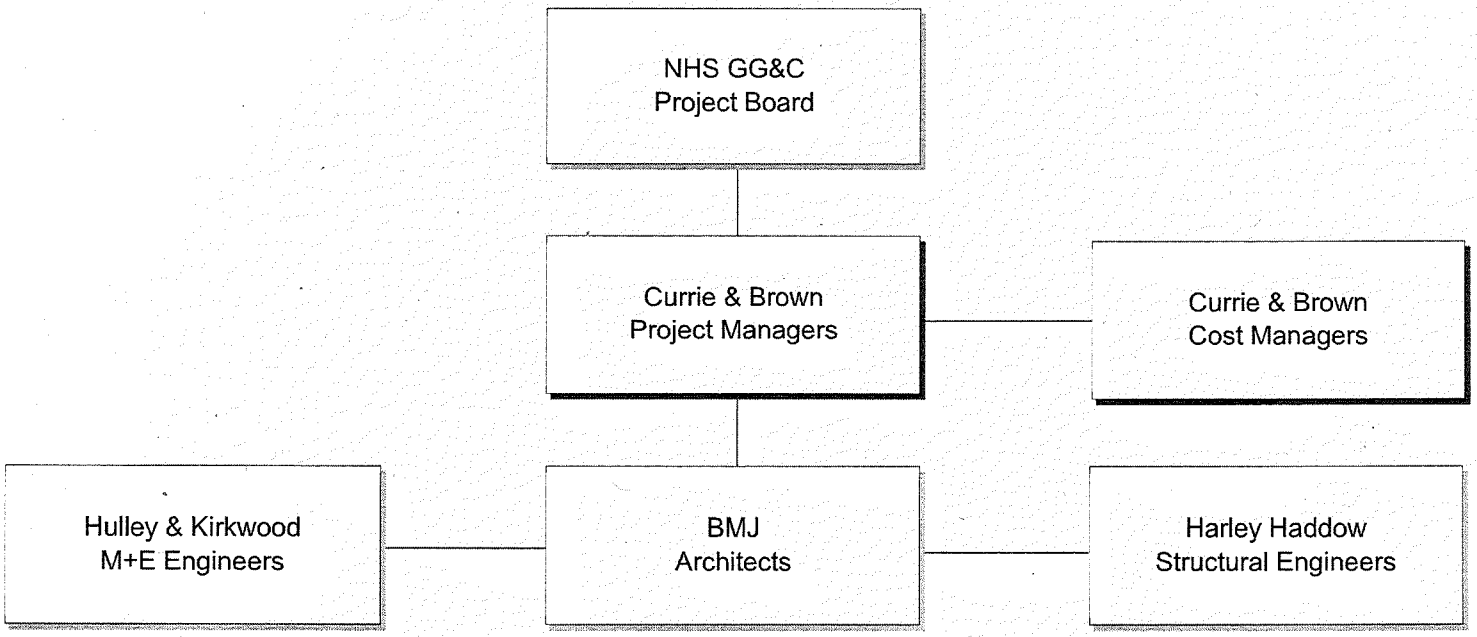

3. Schedule of Accommodation

Initial meetings with Stakeholders outlined a requirement for a 24 no. bed unit identifying the following key points

- 24 single patient bedrooms to be provided with ensuite bathrooms
- 4 of these bedrooms to have their own air-lock lobby
- 2 no. treatment rooms to be provided
- The consultant office should facilitate hot-desking
- Patient observation by staff is important and should be prioritised in the concepts
- Allow for 2 drug preparation rooms
- Optional extras should space requirements allow include staff room, staff beverage area and day area.
- Flush wall protection preferred to projecting type with handrails to improve infection control

The Schedule of Accommodation was further developed with the stakeholders to incorporate these requirements.

4. Maternity Building

Existing Building

The existing 5-storey building currently accommodates the maternity unit and has been extended and altered to varying degrees since its construction in 1970.

The building is concrete construction with reinforced concrete columns, floors and stair cores with precast external wall panels and fins. The existing top storey where the plant room and midwife offices are located appears to be concrete walls and columns with steel roof beams and profiled steel decking.

It is possible that the precast units might be load bearing as there is precedence for this in other buildings of a similar type and age. It is also possible that there is a concrete ring beam system at each floor level.

Record drawings of the existing building structure have currently not yet been sourced. However, there is anecdotal evidence (the size of the roof level soil stacks and vents and the continuation of the southeast corner stair through the roof level) that suggests the building may have originally been designed for additional floors, however this requires further investigation.

5. Maternity Building – Option 1

Proposal

Option 1 proposes the construction of a new additional floor to the top of the existing Maternity Building to provide accommodation for the new BMT Unit.

Two new sets of stairs constructed out with the current building footprint are required to provide compliant fire escape routes between the new floor and ground level. This is due to non-compliance of the existing stairs with current Building Regulations.

The proposal places all bedroom accommodation with interstitial ensuites around the perimeter of the new floor with clinical support accommodation in the centre of plan, providing good patient observation for clinical staff and good daylight levels / views for patients.

This option includes the construction of an additional floor to the top of the Maternity Building for the new BMT Ward. Listed below are the architectural, M+E and structural assumptions, benefits and challenges facing this option.

Architectural (BMJ)

Assumptions:

- Assumed existing offices on level 4 will be relocated elsewhere. Existing plant will be relocated to upper level.
- Two smaller lifts are FM lifts which can be replaced and taken up to new level 4 BMT Ward.
- Corridors are 2.2m wide for bed movement with flush wall protection. Handrails are not required. Flush wall protection preferred to improve infection control.

Benefits:

- Space efficient with accommodation all on one level. Allows efficient staffing and management of ward.
- Interstitial ensuites between bedrooms maximise patient observation, patient views and daylight levels.
- New construction and building fabric will provide required air quality and airtightness levels.
- Two staff bases / nurse stations indicated. Provides good patient observation.

Challenges:

- Construction challenging within a live hospital environment.
- Construction and health and safety risks with working at height and cranes required over existing low-level buildings which surround site providing restricted access.
- Proposals require to be discussed with Planning Department to ensure viability of additional level being added to existing building.
- Planning Department may restrict building to edge of existing floorplate due to visual impact of an additional floor on top of existing building. Planning may require accommodation to be pulled back from edge of building reducing available area for ward and accommodation may not fit.
- Existing stairs do not allow mattress evacuation. Two new independent stairs require to be constructed to allow this. These may clash with existing services at ground level and parking

requirements may be require to be reduced due to stair locations. Further information on existing underground services is required.

- Existing central circulation stair requires to be reconfigured to ensure a compliant fire escape strategy from new additional level.
- Disruption likely to lower levels due to one existing fire escape stair requiring to be stopped at level 3.
- Geographically, the maternity building is further away from other departments that patients also require to attend such as x-ray.

Mechanical + Electrical Services (Hulley & Kirkwood)

Benefits:

- The location of the ward on the top of the existing building means that disruption to alter drainage services on the floor below will be minimal.
- The location of the ward on the top of the existing building allows the new accommodation to be purpose designed to accommodate the required ventilation ductwork and plant
- Because the ward will be new build construction the required air tightness may be easily achieved.
- New plant space could be provided at roof level to serve the ward
- The drainage infrastructure appears to be robust and capable of taking the additional load of another ward floor.

Challenges

- Little is currently known about the existing building services infrastructure hence extensive survey and testing may be required to ascertain infrastructure capacity.
- The existing roof top plantroom would need to be relocated up a level with new plant resulting in loss of service during changeover and additional cost.
- The additional floor will increase the GIFA and hence the thermal (fabric loss and ventilation) and small power loads. This may require upgrade to the existing supporting infrastructure.

Structural (Harley Haddow)

Benefits

- Record drawings of the existing building structure have not been sourced at time of writing. However, there is anecdotal evidence, e.g. the size of the roof level soil stacks and vents, the continuation of the southeast corner stair through the roof level that suggests the building may have originally been designed for additional floors. This needs tested. Addition of a new storey at roof level using a lightweight structural solution may be achievable subject to appropriate structural forensic investigation.
- The proposed new external stairs offer the opportunity for use as temporary access during the construction process allowing operatives to bypass the maternity wards limiting disruption, also saving time and money erecting some sort of access to the works.
- The existing lifts in the maternity unit currently extend up to the midwife offices and plantroom at roof level. The BMT ward would therefore not require additional lift construction subject to confirmation that the existing lifts configuration is suitable. Potential cost benefit.

Challenges

- Building on top of a three storey building means working at height so appropriate measures will have to be taken. The existing maternity unit must remain live throughout the proposed development.
- Site access is an issue on this project due to the close proximity of surrounding buildings and a road passing by and under the maternity unit. Considerations will have to be taken for access to cranes, possibly closing Langlands Drive or closing the Visitor and Patient car park. Both causing disruption to patients, visitors and staff.
- The staff quarters and plant room on the roof will have to be relocated to allow work to begin.
- There are no records for the existing building therefore an intrusive investigation will have to be carried out to establish the impact on the structure and capability to carry increased loading. Structural investigations will be severely constrained by the 24hr working of the unit.
- Due to the increased number of patients and staff there will be an increased foul water discharge to the existing sewer network. Capacity checks will be required following surveys of the existing below ground drainage. Scottish Water will have to be consulted.
- An SI will have to be carried out to determine a suitable foundation design for the stairs. The new stair positions may result in the existing entrance area being partially impeded and some of the disabled parking adjacent to the building entrance may be lost. Existing below ground utilities and access to the building may be disrupted. Diversions may be required.
- In order for new or reconfigured services to be installed there will be a possible requirement to punch through some of the existing concrete floor slabs.
- Environmental conditions will be a constraint; construction activity noise, dust, debris above and around a 24hr functioning maternity unit.

6. Neurology Building

Existing Building

The existing 4-storey building currently accommodates outpatient clinics, bed and office accommodation.

The current building was originally constructed in 1972 and extended on two occasions; a single storey extension to the north and the addition of a new storey at roof level.

The original construction is a reinforced concrete frame comprising; piles foundations, suspended ground slab, columns, a ring beam system at first floor, ribbed concrete floor slabs spanning north/south with these floors appearing to be supported on external precast concrete loadbearing wall panels.

There is an internal spine of columns and potentially a spine beam supporting the floors. The extended topmost floor is understood to be a steel frame construction with a pitched roof.

The single storey north extension has the appearance of a modular type construction but this needs confirmation either though archive drawings review or site investigation. There are records drawings for the original construction held within the Estate Department records.

7. Neurology Building – Option 1

Proposal

Option 1 proposes a refurbishment of the existing first and second floor to provide accommodation for the new BMT Unit.

Due to non-compliance of the existing stairs with current Building Regulations, a new fire escape stair and bed evacuation lift is required to the building frontage, adjacent to the existing entrance.

There is scope to introduce a new main entrance to the building, however the existing drop off zone will require to be rerouted due to the introduction of this along with the necessary escape stair and lift.

The existing escape stair to the west of the building will require to be replaced with a new wider stair, again to facilitate compliant patient evacuation and fire escape routes.

The existing building footprint is narrow. In order to provide good patient observation for clinical staff, the ensuites are placed along the external walls of the building.

Architectural (BMJ)

Assumptions:

- Existing neurology building level 1 and 2 accommodation will be relocated elsewhere.
- Corridors are 2.2m wide for bed movement with flush wall protection. Handrails are not required. Flush wall protection preferred to improve infection control.

Benefits:

- The building is future-proofed with the introduction of a new stair and bed lift which serves all floors. Allows for flexibility and future change of use to third floor if required.
- Good patient observations with ensuites either interstitial or located to exterior wall.
- New main entrance to building provided. Provides area for required plant over main entrance roof.
- Neurology building is closer to other departments that patients also require to attend such as x-ray.

Challenges:

- Due to narrow footprint of building, accommodation is split over two levels resulting in some accommodation requiring to be replicated and staffing issues.
- Airlock lobbies to high dependency bedrooms maybe too small if sink required. Infection control to confirm.
- Construction challenging within a live hospital environment.
- Existing stairs do not allow mattress evacuation. A new independent stair to the front of the building and replacement of existing stair to side require to be constructed to allow this. The new stair may clash with existing services at ground level and the existing road will require to be reconfigured. Further information on existing underground services is required.

- Existing lifts are not sized to take hospital beds. New bed lift required to front of building to allow patient movement. Lift is also required due to link-bridge alterations required in future for vehicle access.
- May be planning and aesthetic issues with plant located at front of building. Proposals require to be discussed with Planning Department.
- Required air tightness and air quality harder to achieve with existing building fabric. Existing fabric will require to be upgraded.
- Patient views and daylight levels reduced where ensuites are located along exterior walls.
- Long corridors and narrow footprint result in fewer areas to turn beds 180 degrees.

Mechanical + Electrical Services (Hulley & Kirkwood)

Benefits:

- No significant increase in GIFA hence heating (fabric loss) and small power loads unlikely to change significantly
- Because the ward displaces existing ward there is unlikely to be significant change to loadings for water and drainage infrastructure
- Good quality information is available for the existing services installations
- Services infrastructure works are planned that will improve the resilience of the building services infrastructure
- A new electrical distribution system is being proposed for the building so full SHTM compliant power supplies can be provided
- A new fire alarm system is being proposed for the building so providing an up to date system in full compliance with the current regulations is possible together with linking it to the site wide system

Challenges

- There is no existing space to accommodate the ventilation plant required to serve the ward. Forming new plant space at roof level would present challenges to the operation of the building and structural design.
- The new ventilation plant required to serve the ward would place additional load on the building boiler plant (procured under the infrastructure works) and this would require an upgrade or replacement of that plant.
- The new ward accommodation will require positive pressurisation and this may require extensive works to the building fabric to improve air tightness.
- The existing building is predominantly naturally ventilated and the structural floor to floor heights will designed accordingly. Accommodating the large ventilation ducts required to serve the BMT wards may prove to be difficult and will almost certainly compromise ceiling heights.
- Splitting the unit over two floors does effectively double up on the electrical distribution infrastructure as well as any requirements for IPS/UPS systems

Structural (Harley Haddow)

Benefits

- With only the new stairs being constructed this option has little impact on the structure of the building.
- Record drawings for this building exist so impact on the structure can be investigated without the use of extensive intrusive investigation. There may be localised investigations required.
- This method has minimal working at height with only a three storey stair wells being constructed.
- Proposed M&E service routes could utilise the existing window panels with horizontal distribution aiming to minimise disruption to the existing primary structure, e.g. route between slab ribs, and branch off to the different wards/rooms.
- As there is only reconfiguration of the levels going on there is no need for structural demolition work to be carried out on the building.
- The work can be phased i.e. one floor at a time, minimising disruption.

Challenges

- New stair access punches through load bearing precast panels, therefore localised strengthening will be required at these points.
- An SI will be required to determine suitable foundation design for stair /lift cores.
- Access is restricted for construction, also area will need to be set out for site compounds.
- Floor to ceiling heights may be restrictive for services distribution. The possibility exists that slab ribs may require alteration or strengthening. Additional risers may be required but will be restricted by the ribbed floor slab construction, i.e. avoid breaking though ribs and only through the slab topping.
- Although works could be phased disruption remains a risk.
- There is potential for a clash with an R.C. column at ground floor.
- The road will have to be realigned at the entrance. There potential drainage and services diversions around new foundations.

8. Neurology Building – Option 2

Proposal

Option 2 proposes a refurbishment of the existing ground and first floor to provide new BMT Unit accommodation.

Again, Due to non-compliance of the existing stairs with current Building Regulations a new fire escape stair and bed evacuation lift is required to the building frontage, adjacent to the existing entrance. The existing drop off zone will require to be rerouted due to the introduction of the new escape stair and lift.

The existing escape stair to the west of the building will require to be replaced with a new wider stair, again to facilitate compliant patient evacuation and fire escape routes.

The existing building footprint is narrow. In order to provide good patient observation for clinical staff, the ensuites are placed along the external walls of the building on the first floor and between bedrooms on the ground floor where the building footprint is wider.

The infilling of two existing courtyards in the ground floor single storey portion is required to provide a functional layout for the unit.

Record drawings for this building exist so impact on the structure can be investigated without the use of an intrusive investigation.

Architectural (BMJ)

Assumptions:

- Existing neurology building level 0 and 1 accommodation will be relocated elsewhere.
- Corridors are 2.2m wide for bed movement with flush wall protection. Handrails are not required. Flush wall protection preferred to improve infection control.

Benefits

- The building is future-proofed with the introduction of a new stair and bed lift which serves all floors. Allows for flexibility and future change of use to third floor if required.
- Where ensuites are Interstitial between bedrooms, patient observation, patient views and daylight levels are maximised. Note however that not all ensuites are interstitial.
- Easy servicing of ensuites which are adjacent to corridor.
- Neurology building is closer to other departments that patients also require to attend such as x-ray.

Challenges

- Due to narrow footprint of building, accommodation is split over two levels resulting in some accommodation requiring to be replicated and staffing issues.
- Airlock lobbies to high dependency bedrooms maybe too small if sink required. Infection control to confirm.
- Construction challenging within a live hospital environment.
- Existing stairs do not allow mattress evacuation. A new independent stair to the front of the building and replacement of existing stair to side require to be constructed to allow this. The new stair may clash with existing services at ground level and the existing road will

require to be reconfigured. Further information on existing underground services is required.

- Existing lifts are not sized to take hospital beds. New bed lift required to front of building to allow patient movement. Lift is also required due to link-bridge alterations required in future for vehicle access.
- May be planning and aesthetic issues with plant located at front of building on existing low level roof. Proposals require to be discussed with Planning Department.
- Required air tightness and air quality harder to achieve with existing building fabric. Existing fabric will require to be upgraded. May be issues with existing building fabric, life span and structure of single storey ground floor neuro building. May not be suitable for refurbishing.
- Condition of single storey roof - may require to be replaced. Further survey required to determine building fabric condition.
- Existing courtyards to be filled in to provide required area for BMT ward.
- Existing roof may not be strong enough to support required plant. Additional structure required to take new plant loads.
- Limited patient observation due to some ensuites not being interstitial.
- No new main entrance provided to facility.

Mechanical + Electrical Services (Hulley & Kirkwood)

Benefits:

- No significant increase in GIFA hence heating (fabric loss) and small power loads unlikely to change significantly
- Good quality information is available for the existing services installations
- Services infrastructure works are planned that will improve the resilience of the building services infrastructure
- A new electrical distribution system is being proposed for the building so full SHTM compliant power supplies can be provided
- A new fire alarm system is being proposed for the building so providing an up to date system in full compliance with the current regulations is possible together with linking it to the site wide system

Challenges:

- There is no existing space to accommodate the ventilation plant required to serve the ward. New plant space could be provided on the roof of the existing single storey accommodation however this would require structural support that is unlikely to be available with the existing construction and may also present issues with the planning department.
- The ward displaces existing accommodation on the ground floor that is not heavily serviced in terms of water using appliances hence there is would be significant change to loadings for water and drainage infrastructure
- The new ventilation plant required to serve the ward would place additional load on the building boiler plant (procured under the infrastructure works) and this would require an upgrade or replacement of that plant.
- The new ward accommodation will require positive pressurisation and this may require extensive works to the building fabric to improve air tightness. This may prove to be a particular issue with

the single storey accommodation because the construction appears to be lightweight in nature hence more prone to air leakage.

- The existing building is predominantly naturally ventilated and the structural floor to floor heights will designed accordingly. Accommodating the large ventilation ducts required to serve the BMT wards may prove to be difficult and will almost certainly compromise ceiling heights.
- Splitting the unit over two floors does effectively double up on the electrical distribution infrastructure as well as any requirements for IPS/UPS systems

Structural (Harley Haddow)

Benefits

- With only the new stairs being constructed this option has little impact on the structure of the building.
- Record drawings for this building exist so impact on the structure can be investigated without the use of an intrusive investigation.
- This method has minimal working at height with only a three storey stair cores being constructed.
- Benefits are similar to that of Option 1.

Challenges

- The north extension single storey is possibly a modular type structure. Consequently reconfiguring of rooms could remove load bearing walls. This may lead to localised and piecemeal strengthening to roof level.
- Increase in occupancy will require Scottish Water consultation. Reconfigure below ground drainage for new ensuites. Ground slab will require breaking out. Increase in staff and patient numbers therefore the capacities of the sewers will have to be checked for suitability.
- It is unlikely that the extension roof can carry the plant loads therefore strengthening will again be required or, as an alternative, a separate bridging structure could be considered using the two courtyard areas to drop structure to new foundations. This would be disruptive and potentially requires significant alteration of the exiting local structure. Working in these areas is very restricted. A condition survey of the extensions structure and roof should be carried out to ensure that building is suitable for the proposed alterations.

9. Neurology Building – Option 3

Proposal

Option 3 proposes that the existing single storey building adjacent to the main entrance is demolished and replaced with a new extension, allowing the BMTU to occupy one level whilst also providing the building with a new main entrance.

A new bed lift is provided within the new entrance area to provide necessary access from the BMTU up to the level 2 link bridge which connects to the INS and main hospital building. The existing drop off zone will require to be rerouted with the introduction of the new main entrance.

The proposal locates all bedroom accommodation with interstitial ensuites around the perimeter of the ground floor with clinical support accommodation in the centre of plan. This provides good patient observation for clinical staff with good daylight levels and views for patients.

Part of the Existing University Corridor requires to be reconfigured to provide sufficient area for proposals.

Record drawings for this building exist so impact on the structure can be investigated without the use of an intrusive investigation.

Architectural (BMJ)

Assumptions:

- Existing neurology building level 0 accommodation will be relocated elsewhere.
- Corridors are 2.2m wide for bed movement with flush wall protection. Handrails are not required. Flush wall protection preferred to improve infection control.

Benefits:

- Space efficient with accommodation all on one level. Allows efficient staffing and management of ward.
- A combination of both interstitial and outboard ensuites serving bedrooms maximise patient observation, patient views and daylight levels.
- New construction and building fabric to new extension will provide required air quality and airtightness levels.
- Two staff bases / nurse stations indicated. Provides good patient observation.
- New main entrance to building provided. Provides area for required plant over main entrance roof.
- New plant is located in front of lift core and not upper level rooms.
- No requirement to upgrade existing stair as accommodation is all on ground floor level.
- Potential for additional horizontal evacuation at rear glazed link corridor to avoid patients travelling outside.
- Neurology building is closer to other departments that patients also require to attend such as x-ray.

Challenges:

- Construction challenging within a live hospital environment.
- Existing building fabric will require to be upgraded to provide necessary air tightness and air quality levels.

- The existing road and drop off area will require to be reconfigured due to location of new entrance.
- Part of the University corridor requires to be reconfigured.

Mechanical + Electrical Services (Hulley & Kirkwood)

Benefits:

- No significant increase in GIFA hence heating (fabric loss) and small power loads unlikely to change significantly
- Good quality information is available for the existing services installations
- Services infrastructure works are planned that will improve the resilience of the building services infrastructure
- New plant space for the required ventilation plant could be accommodated on the single storey new build
- The new ward accommodation will require positive pressurisation and the works required to achieve this will be less onerous than options 1 and 2 because of the greater portion of new build.
- A new electrical distribution system is being proposed for the building so full SHTM compliant power supplies can be provided
- A new fire alarm system is being proposed for the building so providing an up to date system in full compliance with the current regulations is possible together with linking it to the site wide system

Challenges:

- Locating the wards on the ground floor would require the diversion of all the foul drainage serving the floors above hence the loss of wards 67 and 68 in whole or part while the works are undertaken
- The ward displaces existing accommodation on the ground floor that is not heavily serviced in terms of water using appliances hence there is would be significant change to loadings for water and drainage infrastructure
- The new ventilation plant required to serve the ward would place additional load on the building boiler plant (procured under the infrastructure works) and this would require an upgrade or replacement of that plant.
- The existing building is predominantly naturally ventilated and the structural floor to floor heights will designed accordingly. Accommodating the large ventilation ducts required to serve the BMT wards may prove to be difficult although easier to manage than with options 1 and 2 because of the greater portion of new build.
- Proposals would possibly necessitate the relocation of an existing data node room which could be challenging and require other areas outside of the proposed works to be rewired

Structural (Harley Haddow)

Benefits

- The new extension has no new stairs and lift requirement. No working at height.
- The new north extension structure can be designed to suit the required room layout and provide built in future proofing as required. Design life will be extended.
- Construction method will be an efficient appropriate solution. There will be limited structural alterations to the existing building.
- Plantroom areas can be incorporated and designed into the new layout without considering effects on existing roof structure.

Challenges

- Increase in staff and patients numbers therefore the capacities of the sewers will have to be checked for suitability and consultation with Scottish Water.
- The surrounding road, parking, footpaths and landscape will require reconfiguration. Below ground utilities/ services may require diversion.
- A load bearing column may be been removed in the new entrance area and therefore localised structure will be required. However this may be subject to review to remove the associated risks and costs.
- A Site Investigation (boreholes/trial pits) will be required to assess ground conditions and determine appropriate foundation solution. The existing building is piled. Differential settlement of new build extension and existing structure will require careful consideration.
- The existing ground floor slab will require localised break out for new drainage.
- Routing if services into the existing building may be restricted by existing floor to ceiling heights.

10. Budget Costs

11. Summary

It should be noted that the design team has completed the feasibilities by carrying out a walk round of the proposed sites and discussing the requirements of the brief and various options with the client.

A full, detailed survey will be required to determine the condition and suitability of the existing fabric, structure and services of each building. The viability of each proposal cannot be confirmed until this is completed.

There are a number of derogations required as follows

- The areas shown on plans may reduce or increase after a full building survey and are approximate at this stage.
- There may be service or structural issues, which may make the current proposals not feasible.
- There may be planning issues with the local planning department, which may make the current proposals not feasible.
- Accurate staff nos. will require to be provided to ensure that the correct WC provision is allocated in the proposals.
- Confirmation is required that the waiting area indicated is adequate for the patient numbers anticipated. We are assuming that all visits will be by scheduled appointment with only the occasional unscheduled appointment.
- Assumption made that existing accommodation to be replaced by new proposals can be decanted elsewhere.
- A detailed derogations list would be compiled by the Design Team after a full building survey has been undertaken and taking into account the final design solutions.

Appendix A – Schedule of Accommodation

bmj architects

QEUH Bone Marrow Transplant Unit
Notional Schedule of Accommodation

Issue No : 2
Issue Date : 10.10.16
Job No. : 3470

Section	Description				Comments
Entrance/ Reception/ administration	Air lock entrance lobby	6	1	6	
Entrance/ Reception/ administration	Reception	9	1	9	
Entrance/ Reception/ administration	Visitor Waiting; 6 places including 1 wheelchair place	10	1	10	
Clinical area	Bedroom; single	16.5	24	396	Standard room area
Clinical area	Single Room En-suite	4.5	24	108	
Clinical area	Gowning lobby; single room	6	4	24	
Clinical area	Staff Base; communications; 2 places	6	2	12	
Clinical area	Prep Room - Drugs	12	1	12	Drug Prep, Pharmacy to GMP standards; 24 beds may require 2 no.
Clinical area	Treatment Room	16	2	32	
Clinical area	Clean Utility	14	1	14	
Clinical area	Dirty Utility	12	2	24	24 beds may require 2 no.
Clinical area	Pantry	12	1	12	
Clinical area	Charge Nurse Office; 2 places	12	1	12	
Clinical area	Consultant office (hot desk)	9	1	9	
Clinical area	Day room (optional extra)	20	1	20	
Clinical area	Assisted Bath Room	7.5	1	7.5	
Storage and holding facilities	Equipment store	12	1	12	
Storage and holding facilities	Trolley /wheelchair space; patient transfer	6	1	6	
Storage and holding facilities	Linen bay/ Store	4	1	4	
Storage and holding facilities	Bulks Supplies Store	7	1	7	
Storage and holding facilities	Mobile equipment bay	8	1	8	
Storage and holding facilities	Equipment trolley bay	1	2	2	
Staff Support facilities	Staff WC; ambulant user	2	1	2	
Storage and holding facilities	Disposal Hold	10	1	10	
Support facilities	DSR	8	1	8	
Support facilities	WC; ambulant user	2.5	1	2.5	
Support facilities	Accessible WC; wheelchair assisted	4.5	1	4.5	
Support facilities	Relatives inteview room	9	1	9	
Engineering facilities	Switchgear cupboard	2	1	2	
		Room Total		**784.5**	
Staff Support facilities	Circulation, Engineering Planning allowance at 45%			353	Does not include lift/ lift lobby, communication, FE stair etc.
		TOTAL AREA		**1137.5**	
Additional Accommodation					
Staff Support facilities	Staff room (optional)	16	1	16	
Staff Support facilities	Staff beverage	4	1	4	
Engineering facilities	Battery room; IPS	9	1	9	
		Room Total		29	
	Circulation, Engineering Planning allowance at 45%			13.03	
		Total additional		**42.03**	
		TOTAL AREA inc. additional		**1179.53**	

Appendix B - Maternity

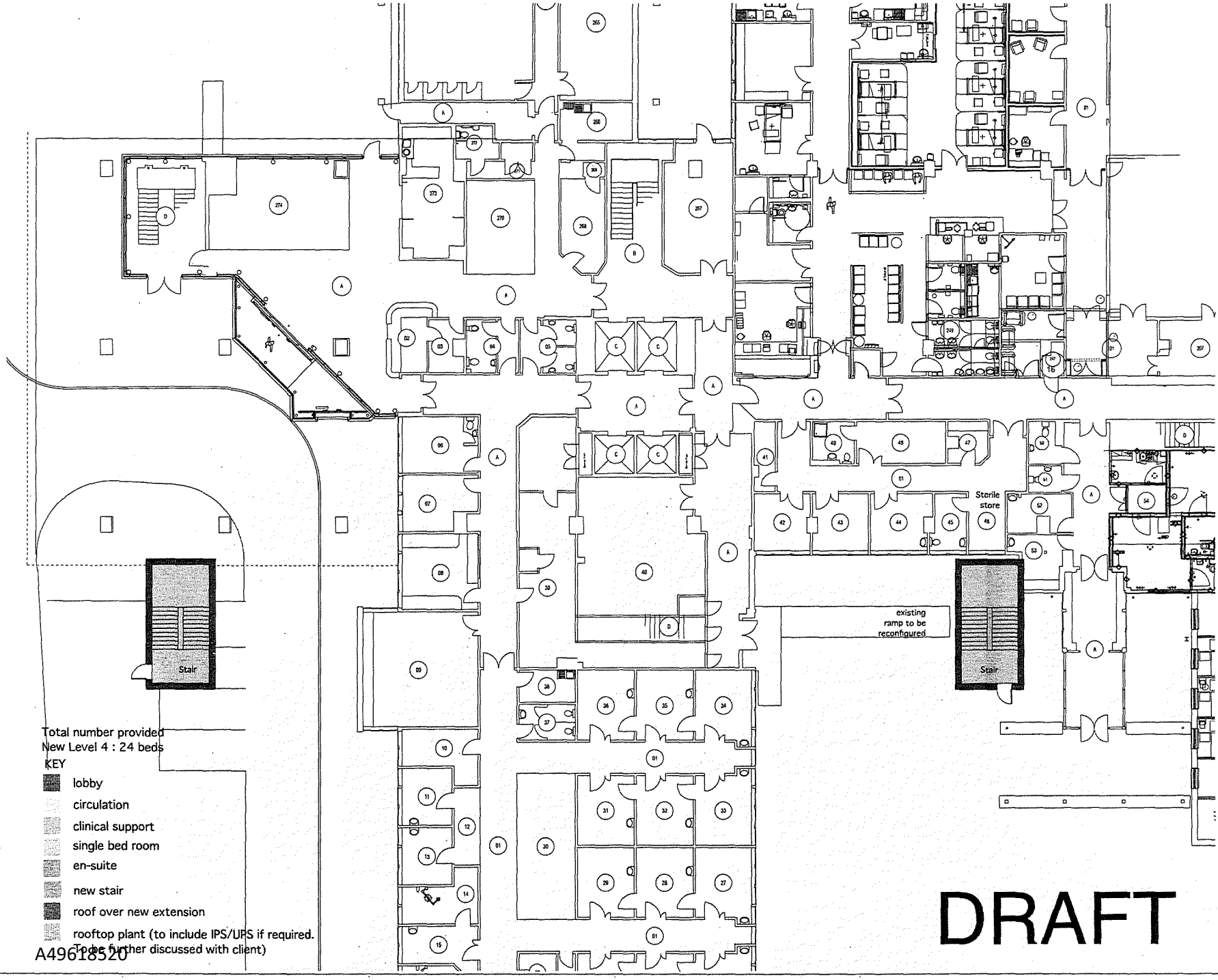
Sterile store
existing ramp to be reconfigured
Stair
Stair
Total number provided
New Level 4 : 24 beds
KEY
lobby
circulation
clinical support
single bed room
en-suite
new stair
roof over new extension
rooftop plant (to include IPS/UPS if required. To be further discussed with client)
DRAFT
NHS
NHS GG&C
Queen Elizabeth University Hospital
Proposed BMT Ward
Maternity Building Level 0 proposed
bmj architects
3470 AL(00)19

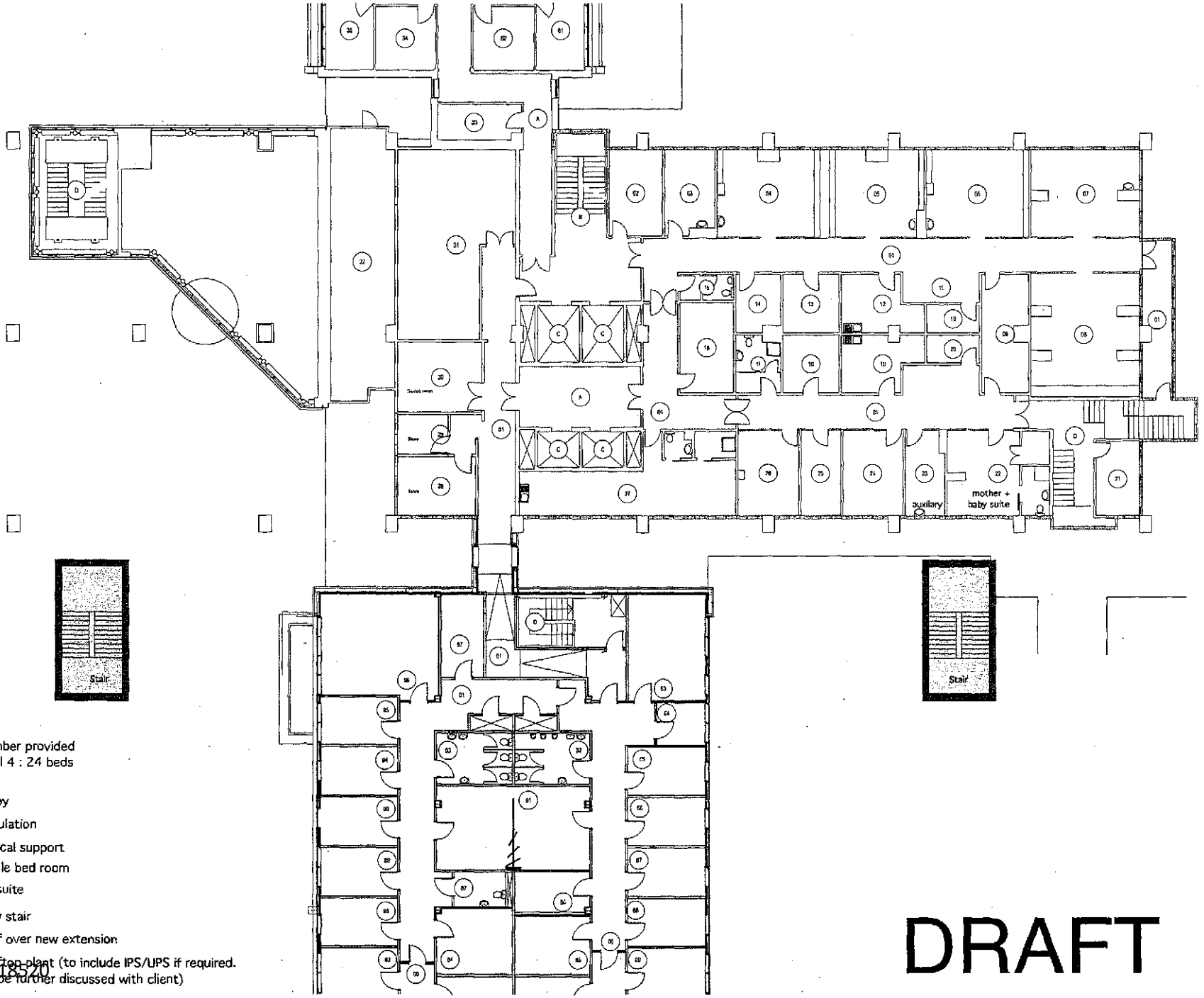

Total number provided
New Level 4 : 24 beds

KEY

- lobby
- circulation
- clinical support
- single bed room
- en-suite
- new stair
- roof over new extension
- rooftop plant (to include IPS/UPS if required. To be further discussed with client)

DRAFT

NHS GG&C
Queen Elizabeth University Hospital

Proposed BMT Ward
Maternity Building Level 1 proposed

bm| architects

3470 AL(00)20

A49618520

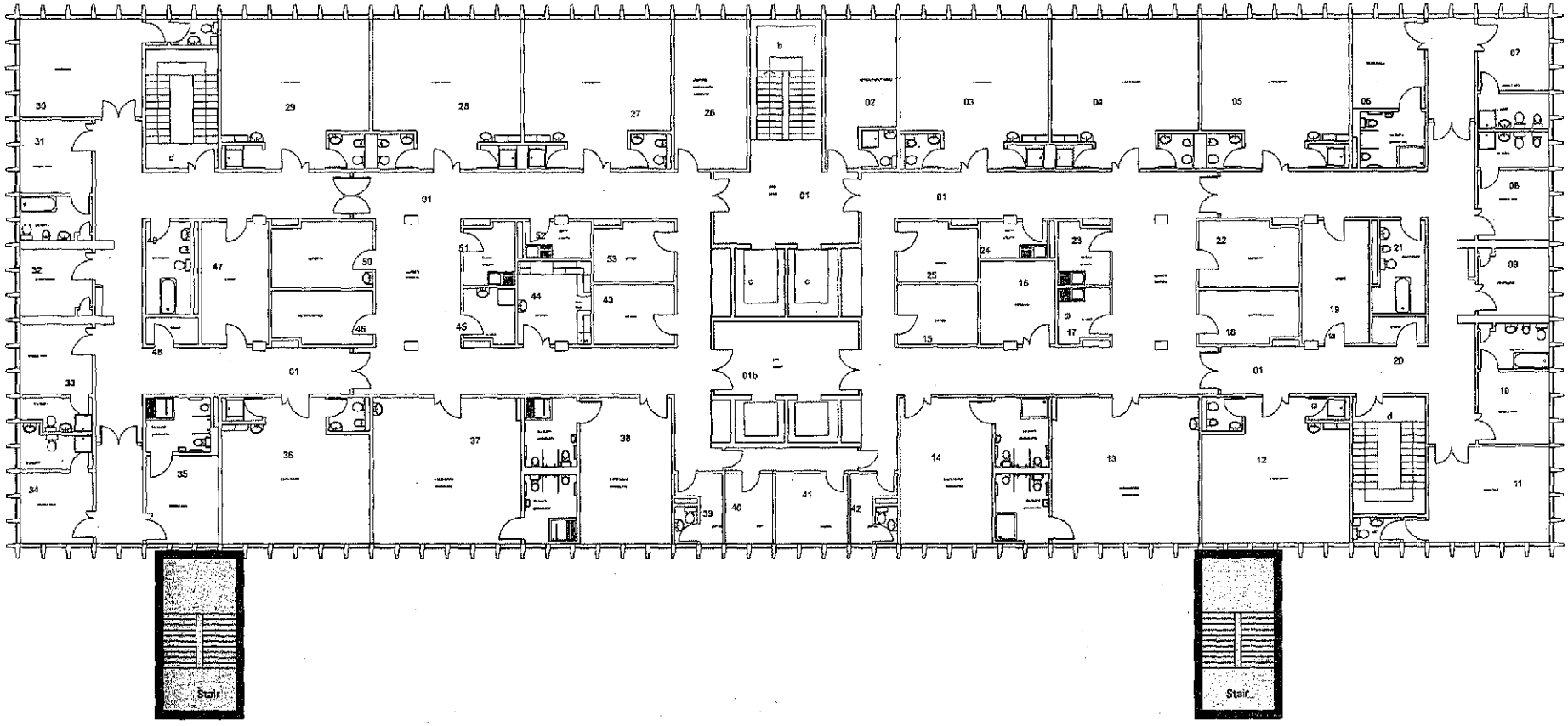

Total number provided
New Level 4 : 24 beds

KEY

- lobby
- circulation
- clinical support
- single bed room
- en-suite
- new stair
- roof over new extension
- rooftop plant (to include IPS/UPS if required. To be further discussed with client)

A4 2618520

DRAFT

NHS
NHS GG&C
Queen Elizabeth University Hospital

Proposed BMT Ward
Maternity Building Level 2 proposed

bmj architects

3470 AL(00)21

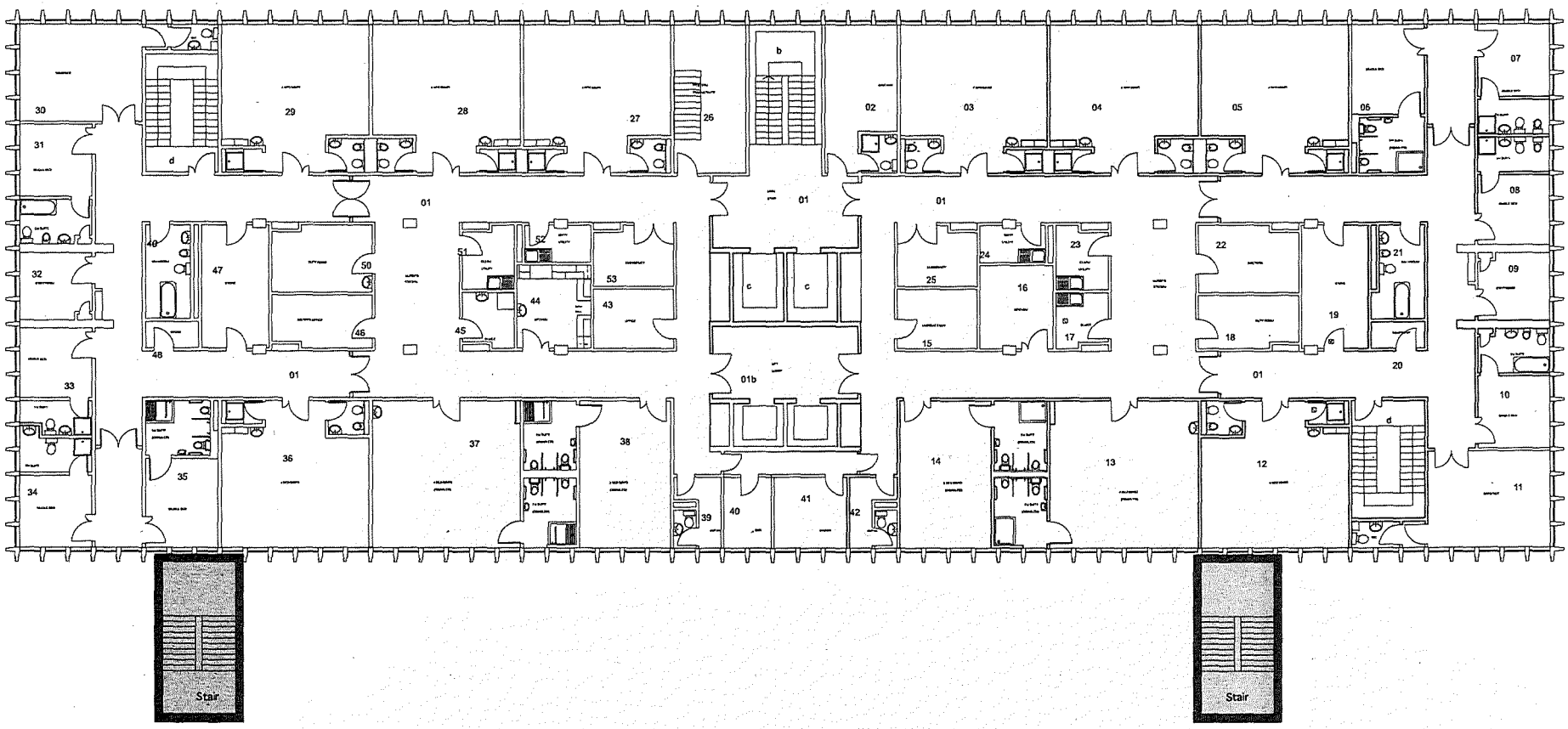

Total number provided
New Level 4 : 24 beds

KEY

- lobby
- circulation
- clinical support
- single bed room
- en-suite
- new stair
- roof over new extension
- rooftop plant (to include IPS/UPS if required. To be further discussed with client)

DRAFT

NHS
Greater Glasgow and Clyde

NHS GG&C
Queen Elizabeth University Hospital

Proposed BMT Ward
Maternity Building Level 3 proposed

bmj architects

Boswell Mitchell & Johnston
The Hub 70 Pacific Quay
Glasgow
G51 1DR

[redacted]

Glasgow / London / Aberdeen

3470 AL(00)22

© Boswell Mitchell & Johnston Ltd

A49618520

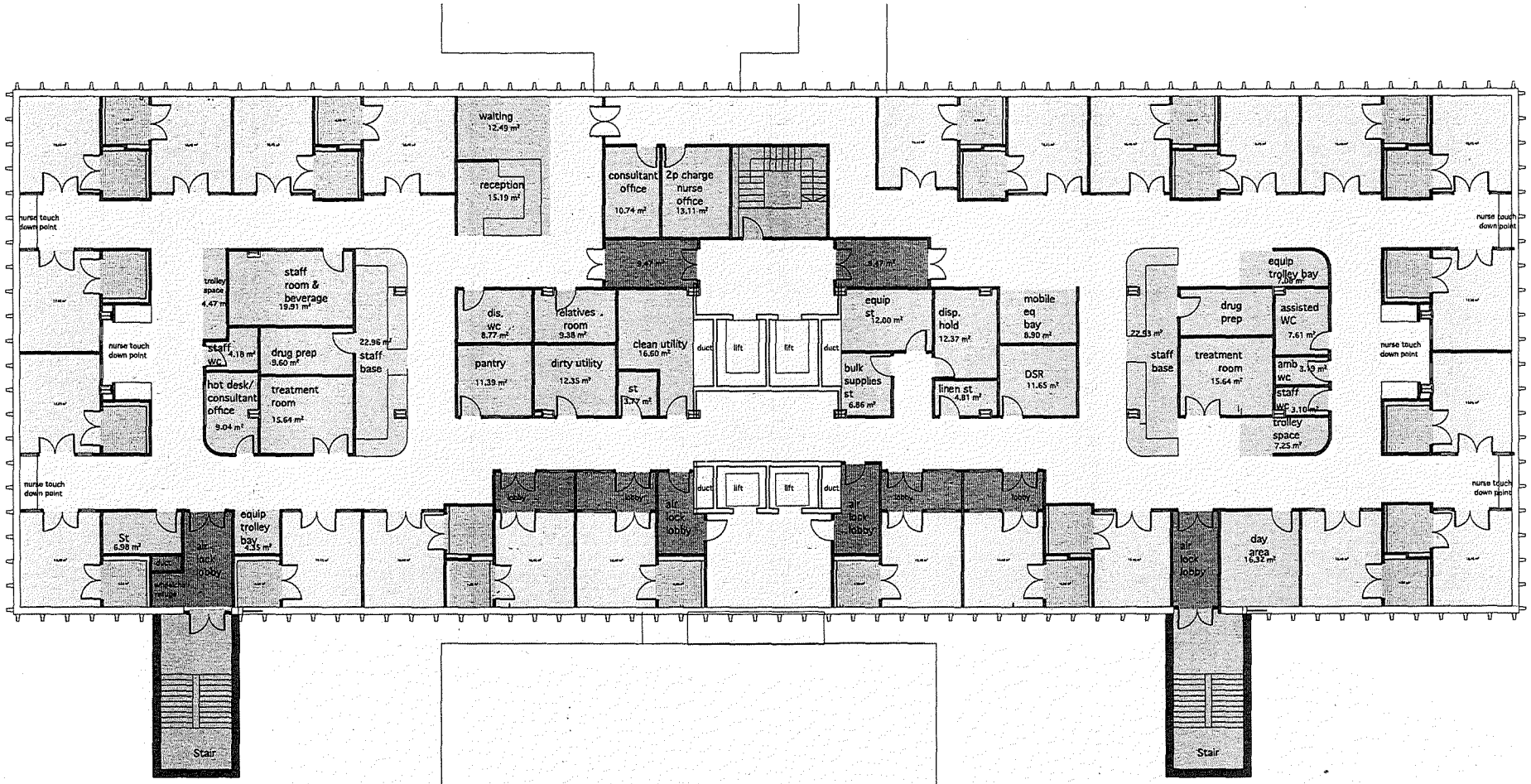

Total number provided
New Level 4 : 24 beds

KEY

- lobby
- circulation
- clinical support
- single bed room
- en-suite
- new stair
- roof over new extension
- rooftop plant (to include IPS/UPS if required. To be further discussed with client)

A49618520

DRAFT

NHS
Greater Glasgow and Clyde

Job Title
NHS GG&C
Queen Elizabeth University Hospital

Drawing Title
Proposed BMT Ward
Maternity Building Level 4 proposed

bmj architects

Boswell Mitchell & Johnston
The Hub 70 Pacific Quay
Glasgow
G51 1DR

[redacted]

Glasgow/London/Aberdeen

Scale @ A1 1:100

Drawn by: VR | Approved by: | Date: 13.10.18

Job No. 3470 | Drawing No. AL(00)23 | Revision A

© Boswell Mitchell & Johnston Ltd

Appendix C - Neurology Option 1

A49618520

Endoscope reprocessing

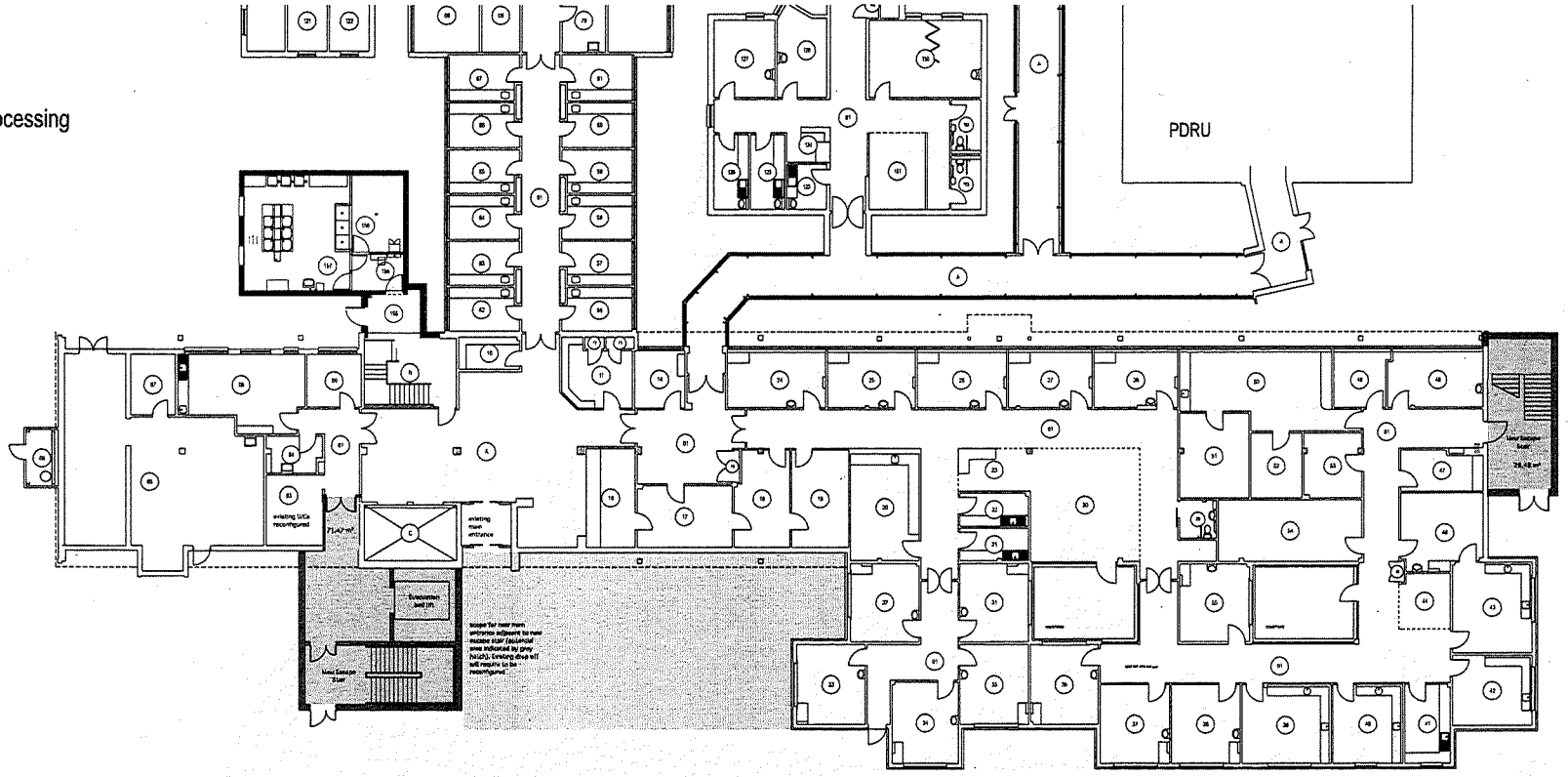

OPTION 1

Total number of bedrooms provided
Level 1 : 13 bedrooms
Level 2 : 11 bedrooms

KEY

- lobby
- circulation
- clinical support
- single bed room
- en-suite
- entrance
- new stair

DRAFT

A49618520

Rev Description Date

NHS
Greater Glasgow and Clyde

Job Title
NHS GG&C
Queen Elizabeth University Hospital

Drawing Title
Proposed BMT Ward - Neurology
Option 1 - Level 0 proposed

bmj architects

Bonwell Mitchell & Johnston
The Hub 70 Pacific Quay
Glasgow
G51 1DR

[redacted]

Glasgow/London/Aberdeen

Scale @ A2 1:200

Drawn by VR Approved by -- Date 26.10.16

Job No. 3470 Drawing No. AL(00)05 Revision -

© Bonwell Mitchell & Johnston Ltd.

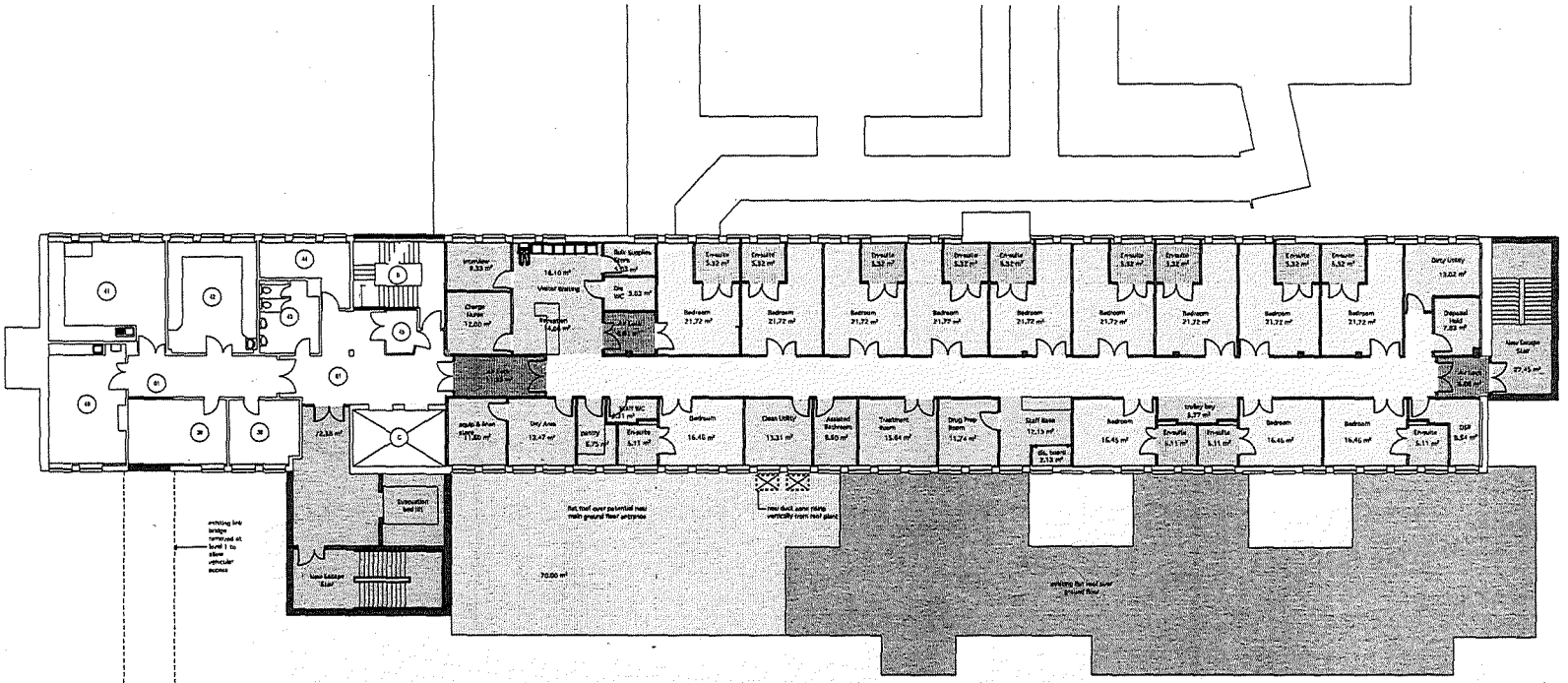

OPTION 1

Total number of bedrooms provided
Level 1 : 13 bedrooms
Level 2 : 11 bedrooms

KEY

- lobby
- circulation
- clinical support
- single bed room
- en-suite
- entrance
- new stair
- rooftop plant (to include IPS/UPS if required. To be further discussed with client)

DRAFT

A49618520

Rev	Description	Date
A	Patient en-suites relocated to exterior wall Day Room renamed Day Area	06.11.16

NHS Greater Glasgow and Clyde

Job Title
NHS GG&C
Queen Elizabeth University Hospital

Drawing Title
Proposed BMT Ward - Neurology
Option 1 - Level 1 proposed

bmj architects

Boswell Mitchell & Johnston
The Hub 70 Pacific Quay
Glasgow
G51 1DR

[redacted]

Glasgow/London/Aberdeen

Scale @ A2 1:200
Drawn by YR Approved by — Date 26.10.16

Job No. 3470 Drawing No. AL(00)06 Revision A

© Boswell Mitchell & Johnston Ltd.

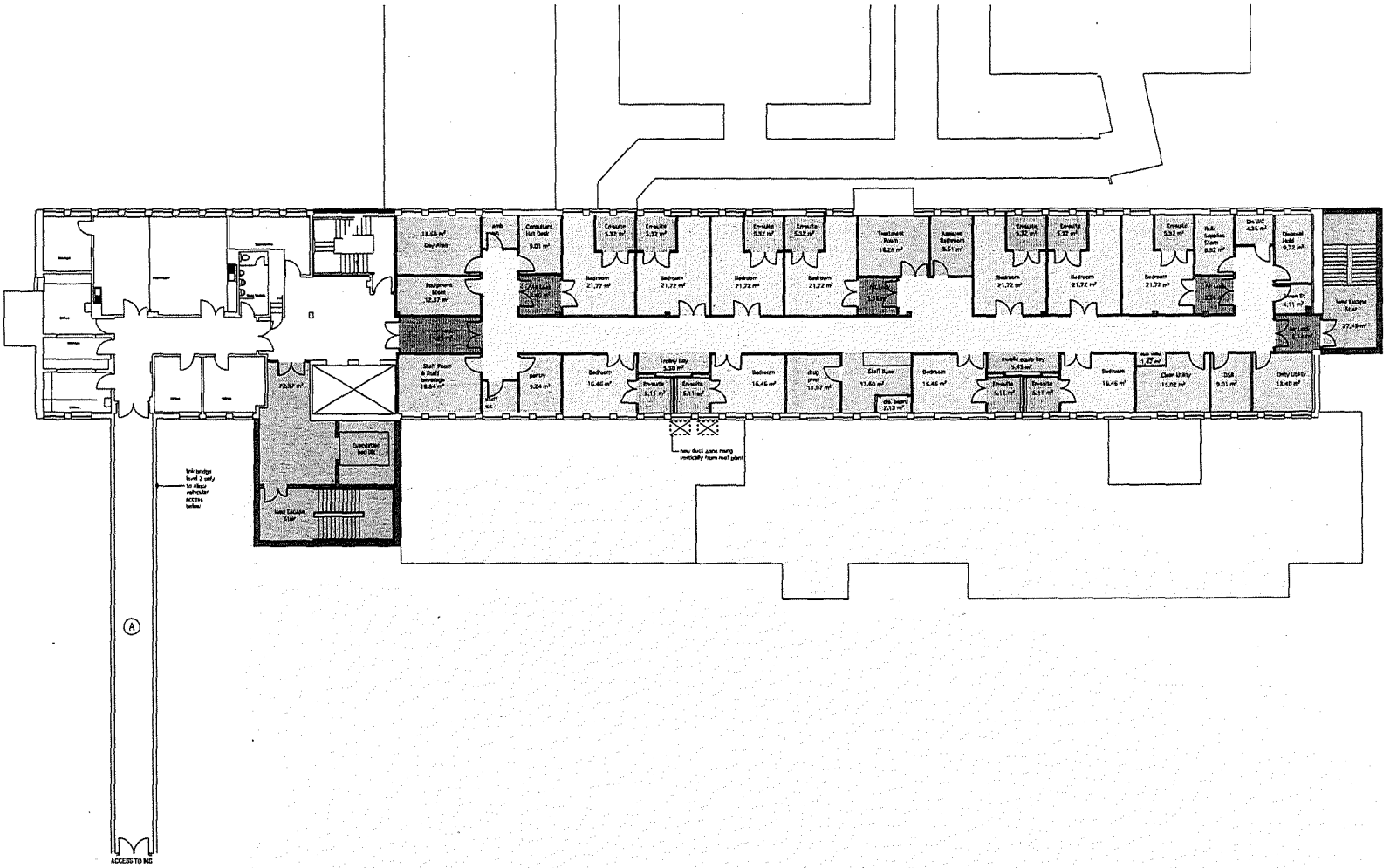

OPTION 1

Total number of bedrooms provided
Level 1 : 13 bedrooms
Level 2 : 11 bedrooms

KEY

- lobby
- circulation
- clinical support
- single bed room
- en-suite
- entrance
- new stair

DRAFT

A49618520

Rev	Description	Date
A	Patient en-suites relocated to exterior wall Day Room renamed Day Area	08.11.16

NHS Greater Glasgow and Clyde

Job Title
NHS GG&C
Queen Elizabeth University Hospital

Drawing Title
Proposed BMT Ward - Neurology
Option 1 - Level 2 proposed

bmj architects

Boswell Mitchell & Johnston
The Hub 70 Pacific Quay
Glasgow
G51 1DR

[redacted]

Glasgow/London/Aberdeen

Scale @ A2 1:200

Drawn by YR Approved by — Date 26.10.16

Job No. 3470 Drawing No. AL(00)07 Revision A

© Boswell Mitchell & Johnston Ltd.

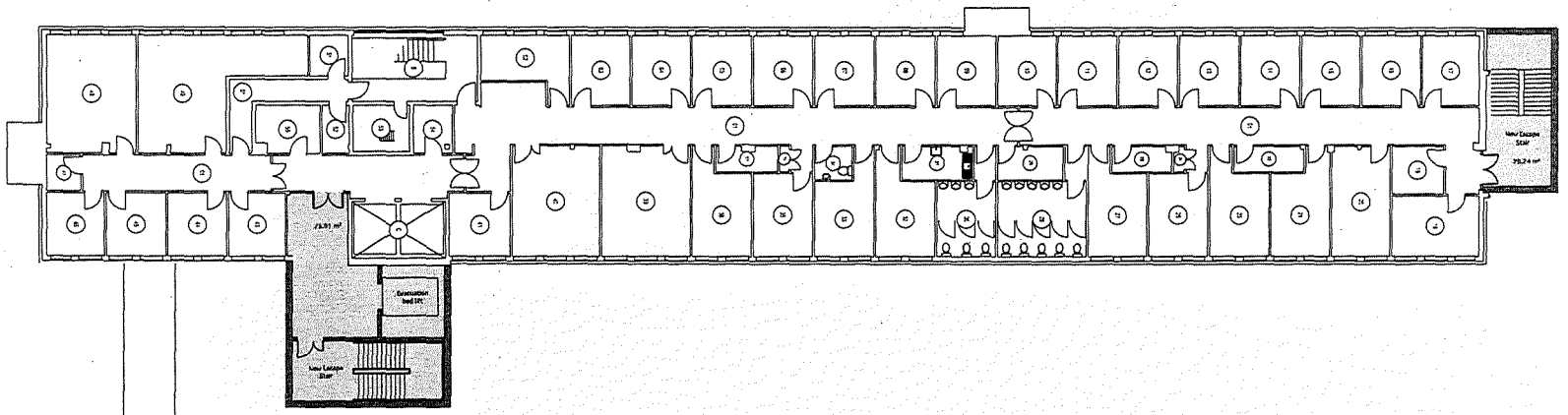

OPTION 1

Total number of bedrooms provided
Level 1 : 13 bedrooms
Level 2 : 11 bedrooms

KEY

- lobby
- circulation
- clinical support
- single bed room
- en-suite
- entrance
- new stair

DRAFT

A49618520

Rev	Description	Date
-	-	-

NHS Greater Glasgow and Clyde

Job Title
NHS GG&C
Queen Elizabeth University Hospital

Drawing Title
Proposed BMT Ward - Neurology
Option 1 - Level 3 proposed

bmj architects

Bonnell Mitchell & Johnston
The Hub 70 Pacific Quay
Glasgow
G51 1DR

[redacted]

Glasgow/London/Aberdeen

Issued at A2 1:200

Issued by YR Approved by - Date 20.10.16

Job No. 3470 Drawing No. AL(00)08 Revision -

© Bonnell Mitchell & Johnston Ltd.

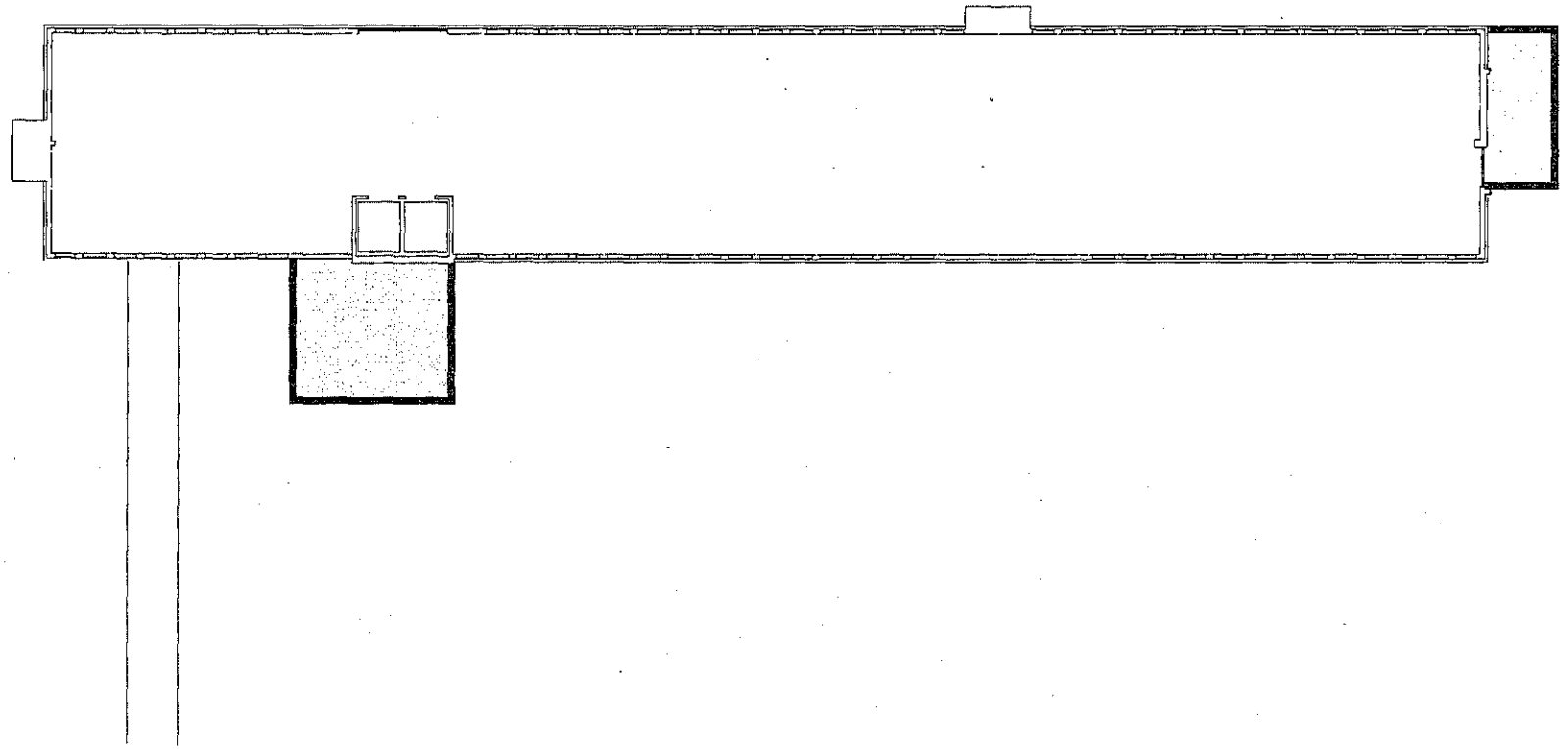

OPTION 1

Total number of bedrooms provided
Level 1 : 13 bedrooms
Level 2 : 11 bedrooms

KEY

- lobby
- circulation
- clinical support
- single bed room
- en-suite
- entrance
- new stair

DRAFT

A49618520

NHS Greater Glasgow and Clyde

Job Title
NHS GG&C
Queen Elizabeth University Hospital

Drawing Title
Proposed BMT Ward - Neurology
Option 1 - Level 4 proposed

bmj architects

Bonnell Mitchell & Johnston
The Hub 70 Rachie Quay
Glasgow
G3 1DH

[redacted]

Glasgow/London/Aberdeen

Scale @ A2 1:200
Drawn by YP Approved by ** Date 26.10.10

Job No. 3470 Drawing No. AL(00)09 Revision -

© Bonnell Mitchell & Johnston LLP

Appendix D - Neurology Option 2

Endoscope reprocessing

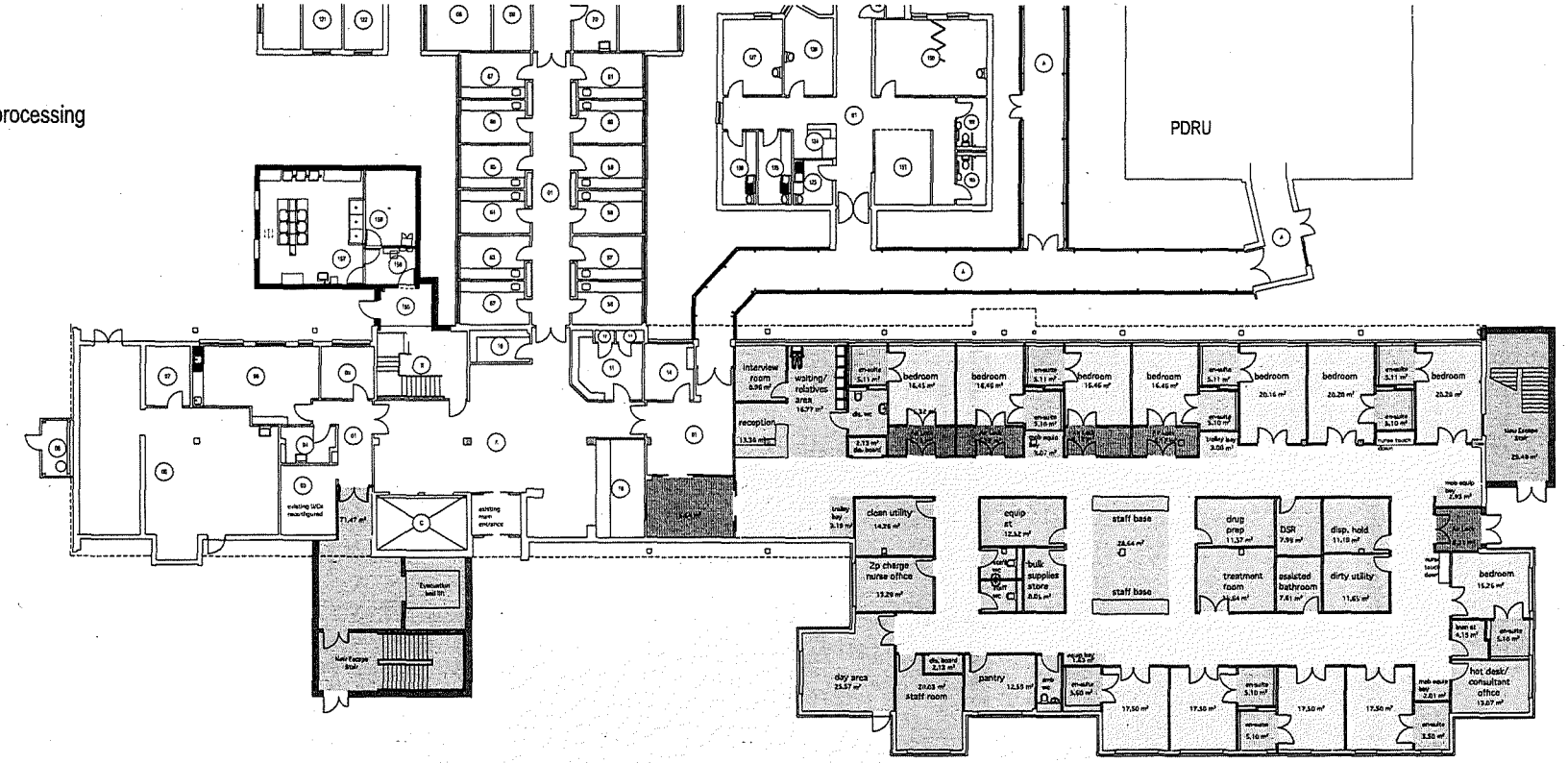

OPTION 2
Total number of bedrooms provided
Level 0 : 12 bedrooms
Level 1 : 13 bedrooms

Note that this option provides one additional bedroom i.e. 25 provided, brief requires 24.

KEY

- lobby
- circulation
- clinical support
- single bed room
- en-suite
- entrance
- new stair
- rooftop plant (to include IPS/UPS if required. To be further discussed with client)

DRAFT

A496185[illegible]

Rev	Description	Date
A	Patient en-suites relocated to exterior wall. Day Room renamed Day Area. Layout further rationalised. Distribution board rooms added.	15.11.16

NHS Greater Glasgow and Clyde

Job Title
NHS GG&C
Queen Elizabeth University Hospital

Drawing Title
Proposed BMT Ward - Neurology
Option 2 - Level 0 proposed

bmj architects

Boswell Mitchell & Johnston
The Hub 70 Pacific Quay
Glasgow
G51 1DR

[redacted]

Glasgow/London/Aberdeen

Scale @ A2 1:200
Drawn by VR Approved by — Date 26.10.16
Job No. 3470 Drawing No. AL(00)10 Revision A

© Boswell Mitchell & Johnston Ltd.

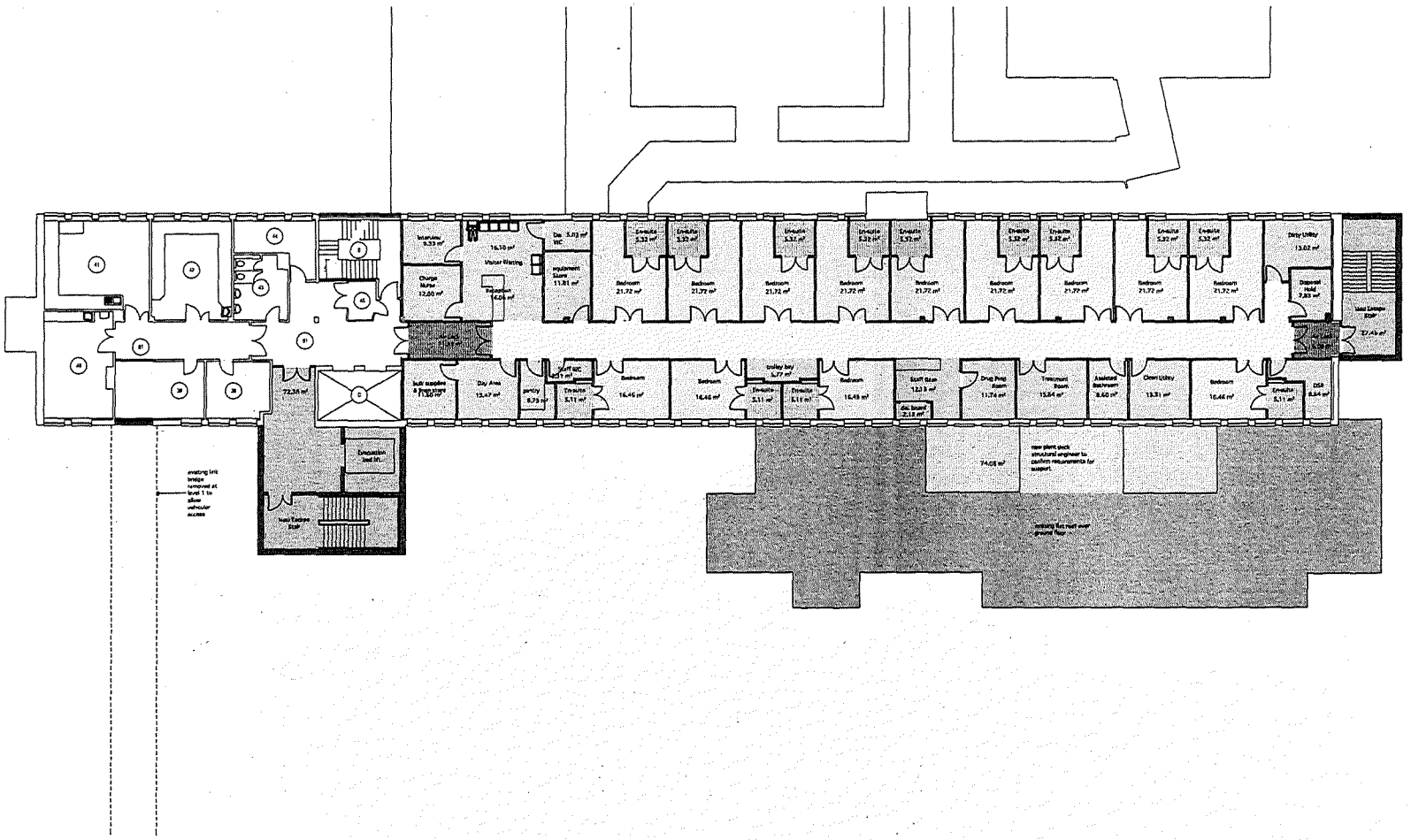

OPTION 2

Total number of bedrooms provided
Level 0 : 12 bedrooms
Level 1 : 13 bedrooms

Note that this option provides one additional bedroom i.e. 25 provided, brief requires 24.

KEY

- lobby
- circulation
- clinical support
- single bed room
- en-suite
- entrance
- new stair
- new plant (to include IPS/UPS if required. To be further discussed with client)

DRAFT

A4961852.20

Rev	Description	Date
A	Patient en-suites relocated to exterior wall. Day Room renamed Day Area. Layout further rationalized. Distribution board rooms added.	15.11.16

NHS Greater Glasgow and Clyde

Job Title
NHS GG&C
Queen Elizabeth University Hospital

Drawing Title
Proposed BMT Ward - Neurology
Option 2 - Level 1 proposed

bmj architects

Roswell Mitchell & Johnston
The Hub 70 Pacific Quay
Glasgow
G51 1DR

[redacted]

Glasgow/London/Aberdeen

Scale @ A2 1:200

Drawn by YR Approved by — Date 25.10.16

Job No. 3470 Drawing No. AL(00)11 Revision A

© Roswell Mitchell & Johnston Ltd.

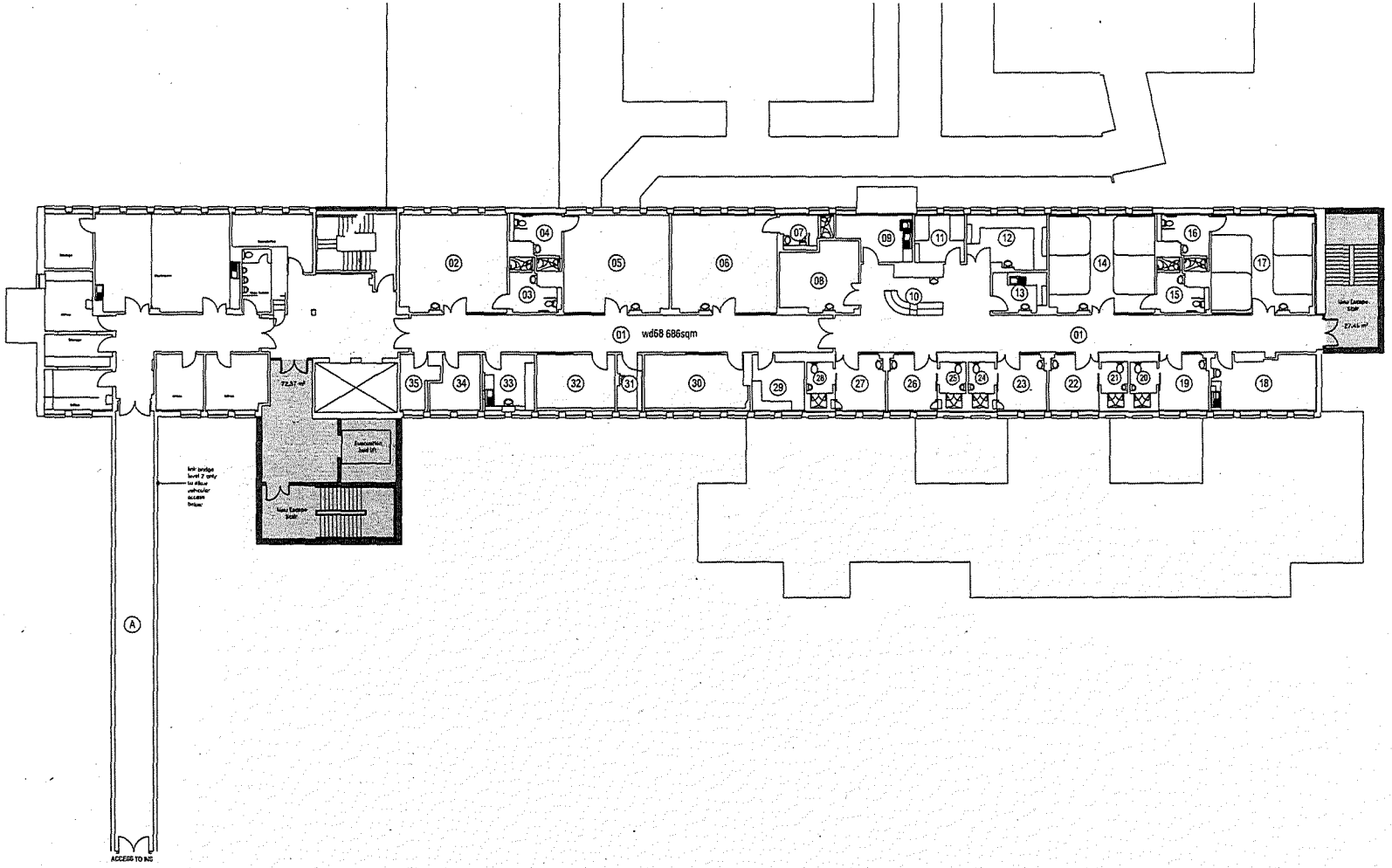

OPTION 2

Total number of bedrooms provided
Level 0 : 12 bedrooms
Level 1 : 13 bedrooms

Note that this option provides one additional bedroom i.e. 25 provided, brief requires 24.

KEY

- lobby
- circulation
- clinical support
- single bed room
- en-suite
- entrance
- new stair
- Rooftop plant (to include IPS/UPS if required. To be further discussed with client)

DRAFT

Rev	Description	Date

NHS Greater Glasgow and Clyde

Job Title
NHS GG&C
Queen Elizabeth University Hospital

Drawing Title
Proposed BMT Ward - Neurology
Option 2 - Level 2 proposed

bmj architects

Boswell Mitchell & Johnston
The Hub 70 Pacific Quay
Glasgow
G51 1DR

[redacted]

Glasgow/London/Aberdeen

Scale @ A2 1:200

Drawn by YR | Approved by — | Date 26.10.16

Job No. 3470 | Drawing No. AL(00)12 | Revision —

© Boswell Mitchell & Johnston Ltd.

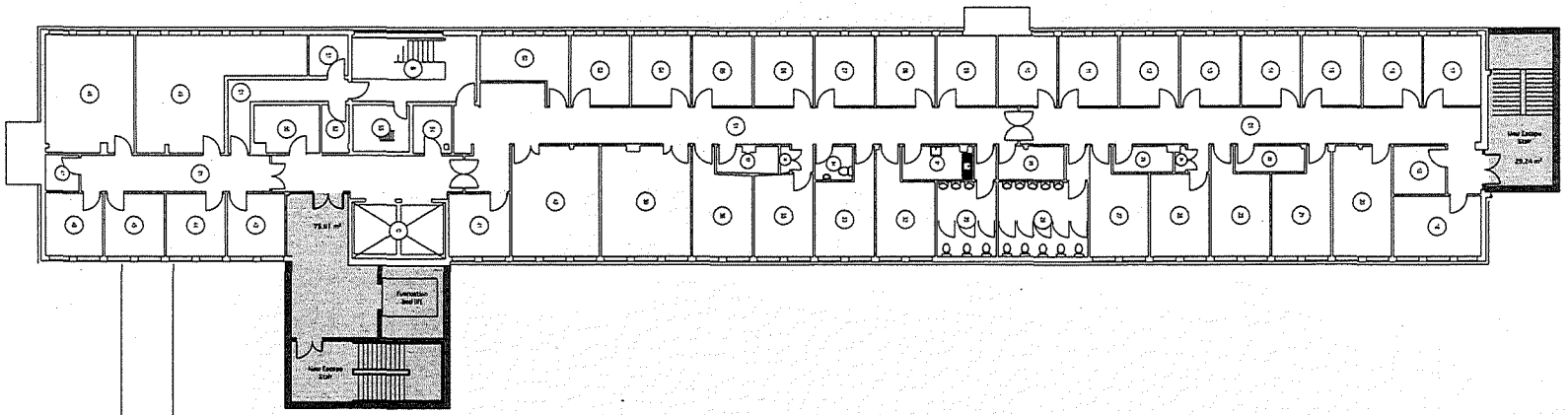

OPTION 2

Total number of bedrooms provided
Level 0 : 12 bedrooms
Level 1 : 13 bedrooms

Note that this option provides one additional bedroom i.e. 25 provided, brief requires 24.

KEY

- lobby
- circulation
- clinical support
- single bed room
- en-suite
- entrance
- new stair
- rooftop plant (to include IPS/UPS if required. To be further discussed with client)

DRAFT

Rev	Description	Date
-	—	—

NHS Greater Glasgow and Clyde

Job Title
NHS GG&C
Queen Elizabeth University Hospital

Drawing Title
Proposed BMT Ward - Neurology
Option 2 - Level 3 proposed

bmj architects

Boswell Mitchell & Johnston
The Hub 70 Pacific Quay
Glasgow
G51 1DR

[redacted]

Glasgow/London/Aberdeen

Scale @ A2 1:200

Drawn by YR Approved by -- Date 26.10.16

Job No. 3470 Drawing No. AL(00)13 Revision -

© Boswell Mitchell & Johnston Ltd.

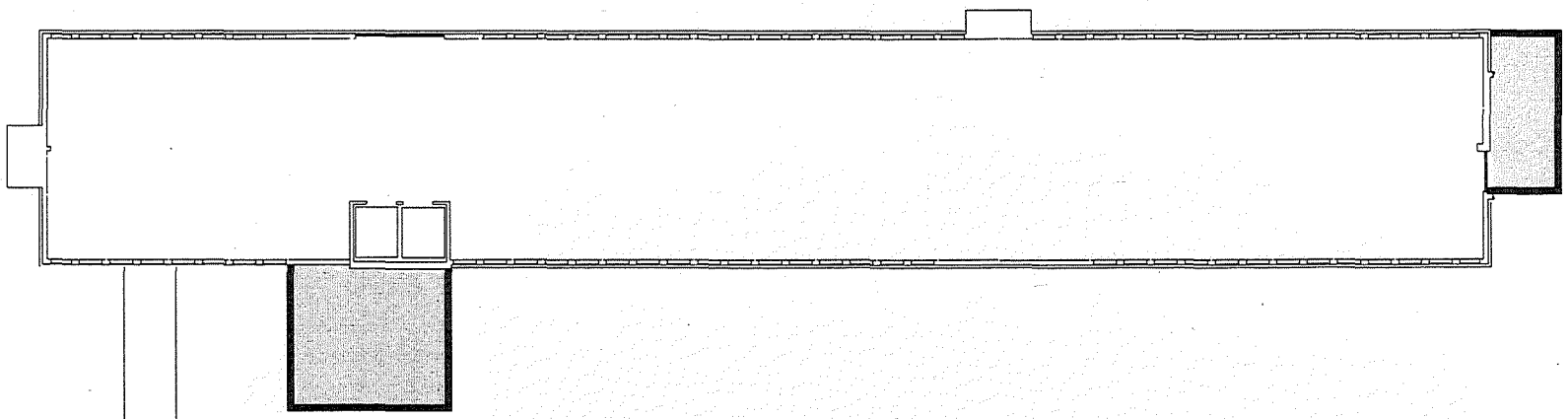

OPTION 2
Total number of bedrooms provided
Level 0 : 12 bedrooms
Level 1 : 13 bedrooms

Note that this option provides one additional bedroom i.e. 25 provided, brief requires 24.

KEY

- lobby
- circulation
- clinical support
- single bed room
- en-suite
- entrance
- new stair
- rooftop plant (to include IPS/UPS if required. To be further discussed with client)

DRAFT

Rev	Description	Date
-	---	--.--.--

NHS Greater Glasgow and Clyde

Job Title
NHS GG&C
Queen Elizabeth University Hospital

Drawing Title
Proposed BMT Ward - Neurology
Option 2 - Level 4 proposed

bmj architects

Boswell Mitchell & Johnston
The Hub 70 Pacific Quay
Glasgow
G51 1DR
[redacted]
Glasgow/London/Aberdeen

Scale @ A2 1:200
Drawn by: YR Approved by: -- Date: 26.10.16
Job No. 3470 Drawing No. AL(00)14 Revision --

© Boswell Mitchell & Johnston Ltd.

A4961852C

Appendix E - Neurology Option 3

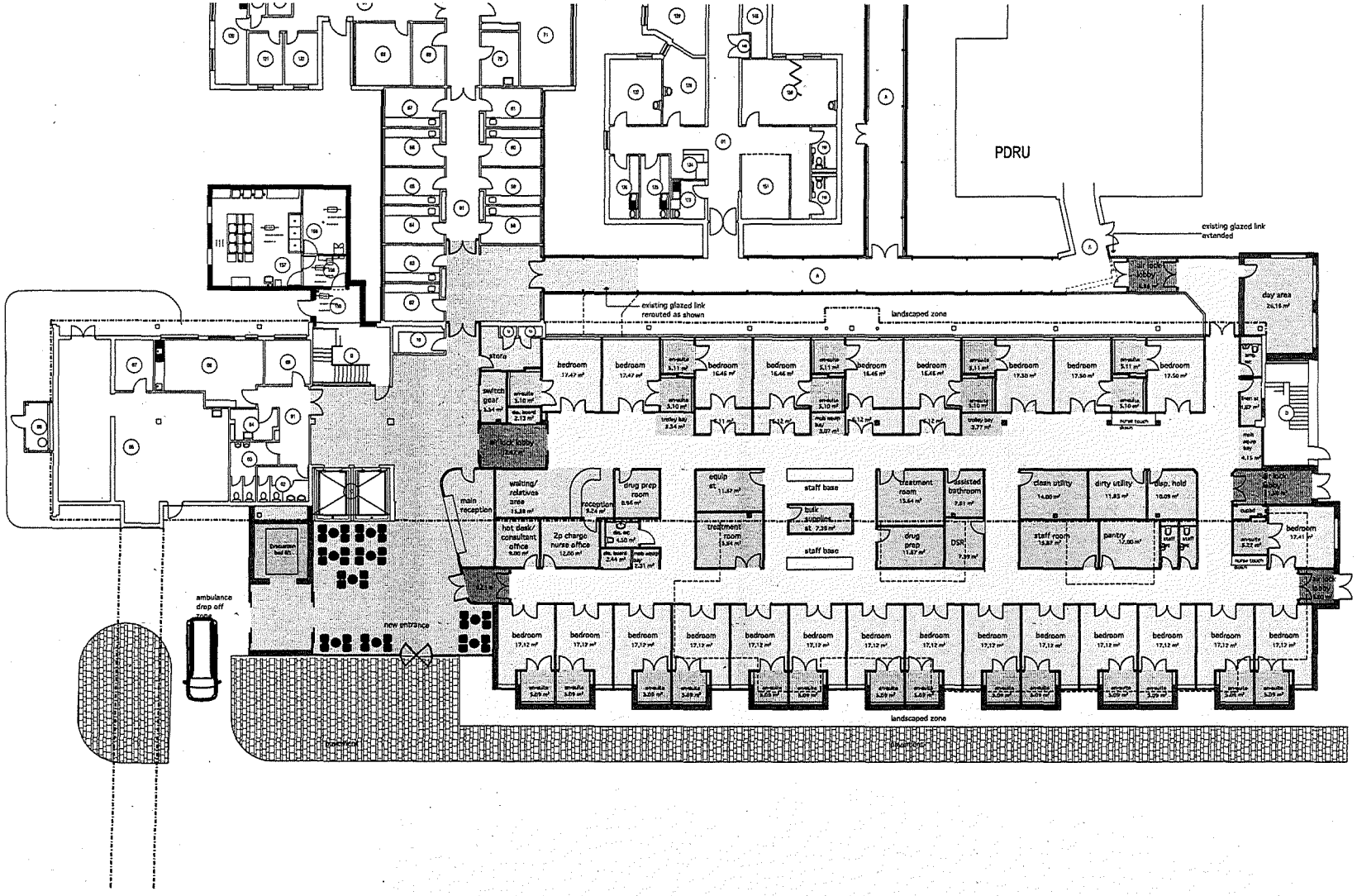

OPTION 3

Total number provided
Level 0 : 24 beds

KEY

- lobby
- circulation
- clinical support
- single bed room
- en-suite
- entrance
- line of building overhang above
- line of existing single storey extension
- new lift

A49618520

DRAFT

Rev	Description	Date
A	Lift added to new entrance, relatives room replaced with drug prep room, dayroom renamed day area	14.11.16

NHS Greater Glasgow and Clyde

Job Title
NHS GG&C
Queen Elizabeth University Hospital

Drawing Title
Proposed BMT Ward - Neurology
Option 3 - Level 0 proposed

bmj architects

Boswell Mitchell & Johnston
The Hub 70 Pacific Quay
Glasgow
G51 1DR

[redacted]

Glasgow/London/Aberdeen

Scale @ A2 1:200

Drawn by: YR Approved by: — Date 26.10.16

Job No.	Drawing No.	Revision
3470	AL(00)15	A

© Boswell Mitchell & Johnston Ltd.

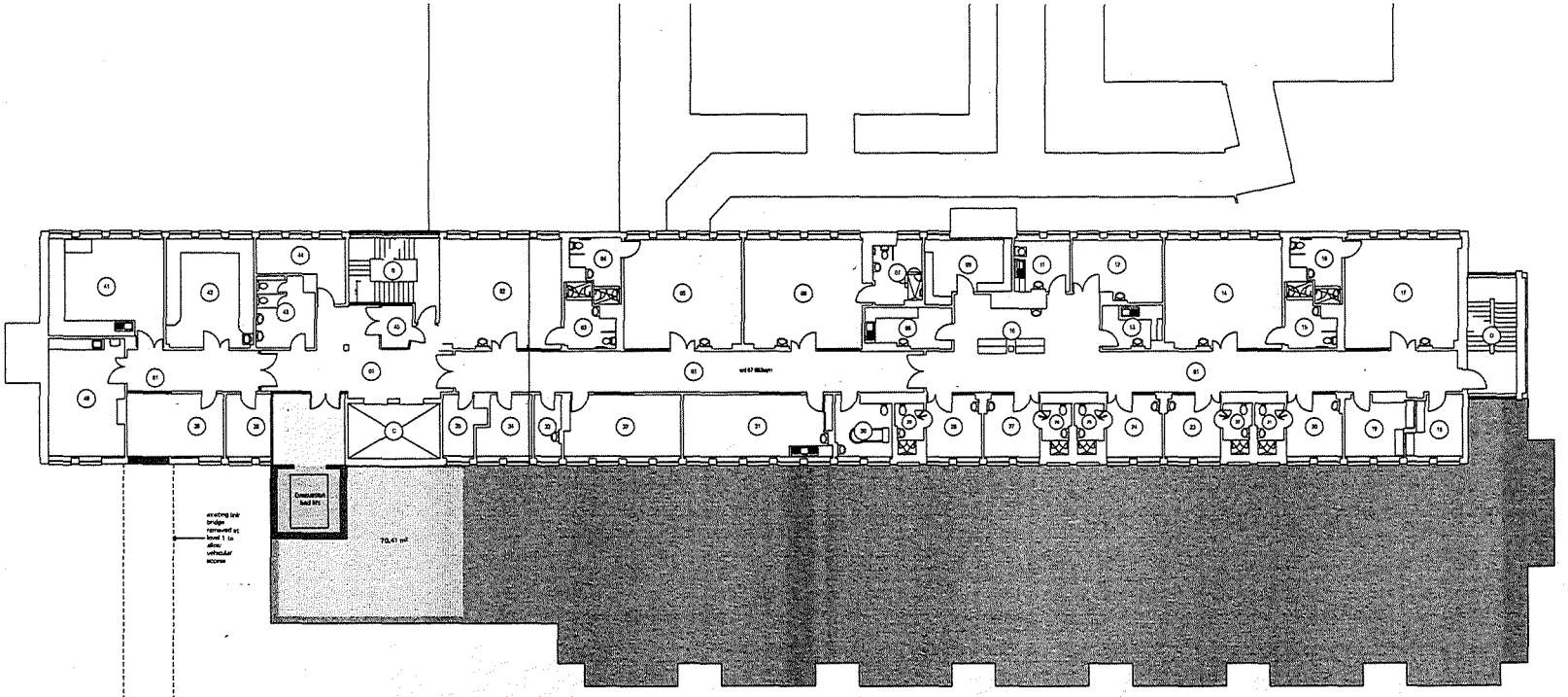

OPTION 3

Total number provided
Level 0 : 24 beds

KEY

- roof over new extension
- rooftop plant (to include IPS/UPS if required. To be further discussed with client)
- new lift
- circulation

DRAFT

A49618520

Rev	Description	Date
A	Lift added	14.11.16

NHS Greater Glasgow and Clyde

Job Title
NHS GG&C
Queen Elizabeth University Hospital

Drawing Title
Proposed BMT Ward - Neurology
Option 3 - Level 1 proposed

bmj architects

Boswell Mitchell & Johnston
The Hub 70 Pacific Quay
Glasgow
G51 1DR

[redacted]

Glasgow/London/Aberdeen

Scale @ A2 1:200

Drawn by YR Approved by — Date 26.10.16

Job No. 3470 Drawing No. AL(00)16 Revision A

© Boswell Mitchell & Johnston Ltd.

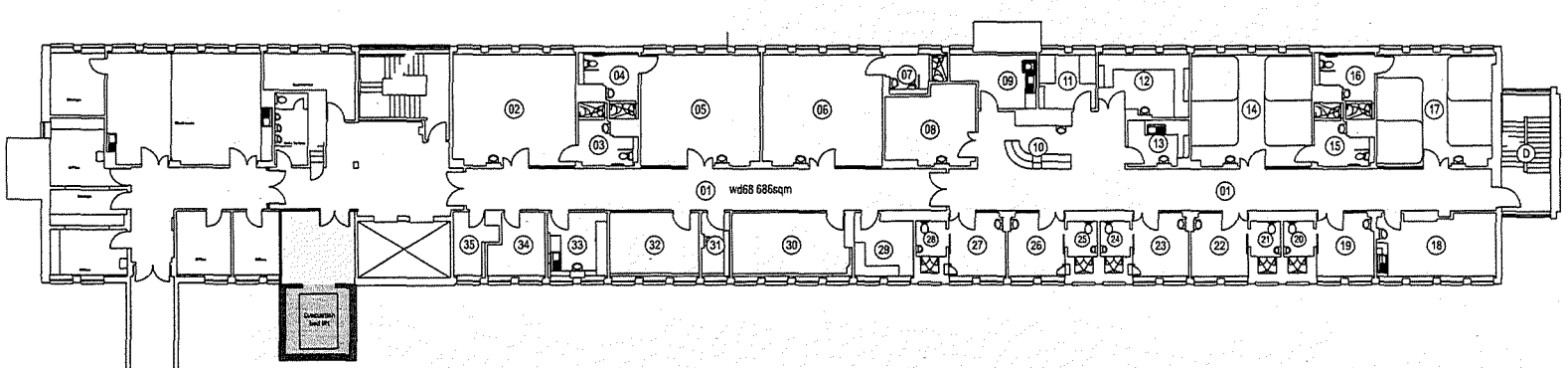

OPTION 3
Total number provided
Level 0 : 24 beds

KEY
new lift
circulation

DRAFT

A49618520

Rev	Description	Date

NHS
Greater Glasgow and Clyde

Job Title
NHS GG&C
Queen Elizabeth University Hospital

Drawing Title
Proposed BMT Ward - Neurology
Option 3 - Level 2 proposed

bmj architects

Boswell Mitchell & Johnston
The Hub 70 Pacific Quay
Glasgow
G51 1DR
[redacted]
Glasgow/London/Aberdeen

Scale @ A0 1:200
Drawn by YR Approved by – Date 14.11.16
Job No. 3470 Drawing No. AL(00)17 Revision –

© Boswell Mitchell & Johnston Ltd.

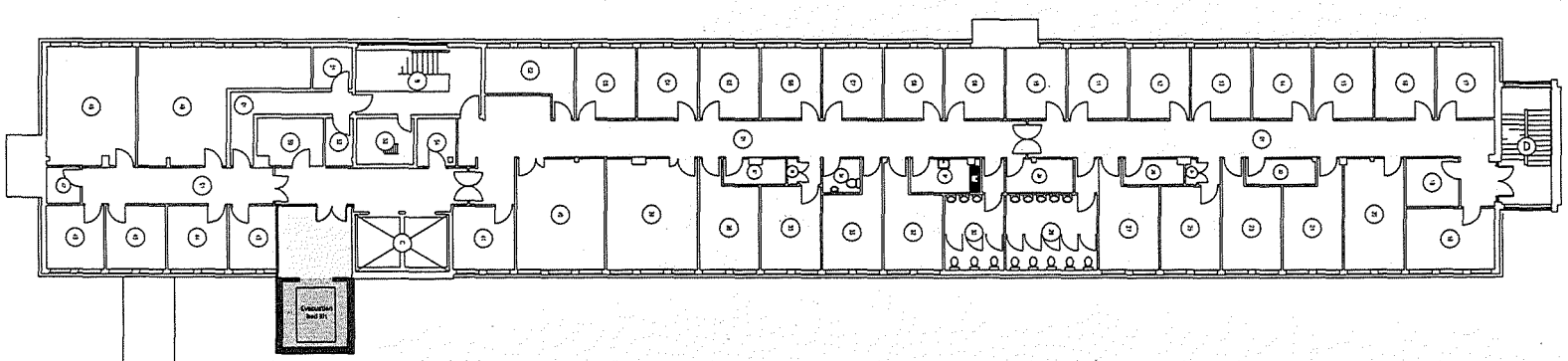

OPTION 3

Total number provided
Level 0 : 24 beds

KEY

new lift

circulation

DRAFT

A49618520

Rev	Description	Date

NHS
Greater Glasgow and Clyde

Job Title
NHS GG&C
Queen Elizabeth University Hospital

Drawing Title
Proposed BMT Ward - Neurology
Option 3 - Level 3 proposed

bmj architects

Boswell Mitchell & Johnston
The Hub 70 Pacific Quay
Glasgow
G51 1DR

[redacted]

Glasgow/London/Aberdeen

Scale @ A2 1:200

Drawn by YR | Approved by -- | Date 14.11.18

Job No. 3470 | Drawing No. AL(00)18 | Revision -

© Boswell Mitchell & Johnston Ltd.

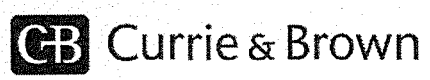

Currie & Brown UK Limited

[redacted]

www.curriebrown.com

SBAR RE Infection Control and Patient Safety at QEUH

Dr P Redding, Dr C Peters, Dr A Despande 03/10/17

Situation

Dr Redding has written to Dr Jennifer Armstrong, Medical Director regarding her serious concerns in relation to the risks to patients arising from infection control issues at the QEUH.

Background

Dr Redding was an ICD (Infection Control Doctor) for nearly 25 years and was involved with the initial stages of the planning for the QEUH.

Assessment

Current issues were identified by discussions with clinical staff, local ICDs and Consultant Microbiology colleagues as well as weekly updates from the IPCT discussed at Consultant meetings. These concerns touch on a number of key facets for a robust and safe infection control service within an acute health care setting.

1. **Patient Placement**
   A fundamental aspect of infection control is the appropriate placement of patients in accommodation that is best suited to prevent hospital acquisition of infection. In a brand new building this should meet SHTM standards and policies for appropriate placement with exact locations for isolation should be available.

Date issue Raised	Type of accommodation	Current Situation	Patient /Staff Risk identified
June 2015, through IC SMT And numerous times in the intervening years including AICC . Letter from Infectious Diseases Consultants raising concerns. **06/05/2016**	**Source Isolation** of Infected patients to prevent transmission of infections to staff and other patients Specialist ventilation required for airborne infections	PPVL (Positive Ventilated Lobbied rooms) exist in both QEUH and RCH. These were not built to SHTM standard. It is unclear what remedial work has been carried out on any/all isolation rooms to date. ID and Microbiology Consultants are concerned that they do not provide appropriate airborne protection. There is a lack of provision of isolation in A+E/Acute	Patients with airborne infections including MDRTB, MERS, Measles, Chickenpox are being transferred to GRI/ Monklands. This was an interim measure put in place in December 2016 and was not meant to be a long term solution. Risk of inadequate airborne isolation pending microbiological diagnosis eg AAFB positive continues. Risk of exposure of large numbers of patients and

June 2015		Receiving	staff to infection eg norovirus/ MERS/Pandemic Flu.
June 2015	**Protective isolation** To prevent infections in patients vulnerable to infections Specialist ventilation required for airborne infections	PPVL rooms exist in the QEUH, Critical Care 4C PICU 2A Throughout the RHC Currently HEPA filters are not fitted in PICU isolation rooms where BMT patients are regularly accommodated Work is due to be carried out to alter 4 rooms to positive pressure in 2A – HAISCRIBE issues raised Safe placement of patients who are immune compromised is not documented or risk assessed for either QEUH or RHC. No HEPAS are in place in the Prep rooms on 2A IV s prepared in treatment room on 2A, not prep room High rates of line related infections are being experienced in the 2A immune compromised population.	Current ongoing risk of airborne infections to neutropenic patients There was a public statement by GGC regarding Air quality when the adult BMT patients moved back to Beatson 08/07/15 which said that : The Bone Marrow transplant services at the Royal Hospital for Children Glasgow are "separate and unaffected" At the time fungal growth was demonstrated in the Paediatric unit and issues with the design were identified. Air quality has remained an issue on 2A since opening. There has been an Aspergillus outbreak on the unit and particle counts continue to be raised. This risk continues .
May 2016	Single side room accommodation	Air changes per hour (ACH) for all clinical accommodation in QEUH and RCH are half the standard – ie 3 ACH instead of 6 Grills collect dust as air is entrained over cooler beams - again not recommended for healthcare setting.	Increased risk of airborne and dust borne infections, especially to immune compromised and CF patients currently housed in these rooms. Potential for organisms such as Acinetobacter, MRSA and MSSA to collect in the ducting. Risk that other

			organisations build hospitals with this ventilation system without knowledge of issues encountered in GGC. This pertains to all the building issues encountered.

2. Cleaning

Cleaning has long been recognised as a key component of an infection prevention strategy for hospitals

Date issue Raised	Issue	Current Situation	Patient Risk identified
June 2015 at ICSMT Estates October 2015	Cleaning agents were not used on floors in clinical areas . Agreement at SMT June 2015 that this would be raised with HPS and ICDS suggested Actichlor should be used	Cleaning agents are still not used . Achtichlor has not been used this Winter to date. Office block is dirty, no /minimal cleaning in place	Build up of environmental organisms throughout the hospital and risk of outbreaks of viral and bacterial infections Most medical staff are located in this block . Risk of infections to staff and ongoing to patients.
September 2017	Dishwashers Not cleaned , installed or operated according to manufacturing instructions	An outbreak linked to this alerted IPCT to issue and remedial steps taken. Water jugs and cups were washed in these dishwashers including for haematology oncology, CF and HIV patients This was not picked up by any audit system but has relevance to infection control throughout the hospital.	Unknown if there are further gaps in the cleaning schedules and environmental audits

3. Estates

Date issue Raised	Issue	Current Situation	Patient Risk identified
June 2015 at ICSMT Estates October 2015	Water Quality	All taps are fitted with TVCs Cleaning and maintenance policy not reported and need to ensure is up to date. Water in 4B not tested to be up to high risk standard.	Risk of Legionella and Pseudomonas and Mycobacterial growth if the rolling programme of cleaning is not maintained.
2015 and ongoing	Water testing	In order to manage outbreaks water testing can be a key measure to investigate possible sources and need to be requested by the ICD Delays in testing and reporting occur	Prolongation of outbreak and source not controlled eg potentially relevant to recurrent issues with Serratia, Pseudomonas Stenotrophomonas, Cupriovadis
July 2015	Plumbing in Neuro surgical block	Sewage leakage repeatedly in theatre suite since before 2015 and ongoing. Not all incidents have been reported to ICDs by ICNs or estates ICDs and ? HIS told that plumbing would be replaced. This has not occurred. Delay in New ICE theatre opening, so Neuro theatres continue in use despite the risk assessment in 2015 stating that the theatre would not be in use beyond December 2016	Obvious risk of repeated incidents due to underlying poor infrastructure in neurosurgical block which increases the risk of post surgical infections .
2014	Decontamination Provision for respiratory clinics	The decontamination facilities in both Paediatric and adult respiratory clinics has been identified as inadequate on numerous occasions. Remedial actions have not been taken.	Risk of fomite transmission of pathogens through inadequately decontaminated respiratory equipment

4. Infection Control Structure

Roles within the infection control team are unclear and appear to have changed eg the lack of formal involvement of the IPCT including an ICD in the planning and commissioning of the QEUH. ICDs are not being informed of HAISCRIBE meetings and incidents in a timely manner.

There appears to be a lack of resources to investigate potential outbreaks /increase in infection rates eg neuro surgical rates of EVD infections, line related infections in 2A.

There is a gap in experience and knowledge of ICDs with Dr Inkster's absence eg . they are unable to sign off and commission complex building projects . This is aggravated by a lack of communication of important information despite requests for that information. There is therefore a professional risk of making decisions and giving advice based on incomplete information.

Recommendations

All the above issues are openly discussed and evidenced information collected . This will ensure that all the concerns are fully understood by everyone. Risk assessments should be carried out where appropriate. Recommendations can then be based on published guidelines with policies and procedures written and updated as required.

NB this document is not comprehensive but summarises the main areas of concern.

76

80. email ExternaltoGGCFw SBAR Action Plan- Latest version

Julie Rothney

From: INKSTER, Teresa (NHS GREATER GLASGOW & CLYDE) <teresa.inkste[redacted]
Sent: 24 September 2019 16:37
To: Peters, Christine
Subject: [ExternaltoGGC]Fw: SBAR Action Plan- Latest version
Attachments: Action Plan submitted to Care and Clinical Governance Committee with updated position- MASTER as of 12th February 2.00pm.docx

Dr Teresa Inkster
Consultant Microbiologist, QEUH
National Training Programme Director Medical Microbiology
Dept of Microbiology
Queen Elizabeth University Hospital
Glasgow
[redacted]

From: Shariff, Imran
Sent: 12 February 2019 14:03
To: Best Jonathan (NHS GREATER GLASGOW & CLYDE); Vanhegan, Elaine; margaret.mcguire[redacted] Steele, Tom; Armstrong Jennifer (NHS GREATER GLASGOW & CLYDE); Best Jonathan (NHS GREATER GLASGOW & CLYDE)
Cc: Allyson.Hirst[redacted] Cobain Linda (NHS GREATER GLASGOW & CLYDE); INKSTER, Teresa (NHS GREATER GLASGOW & CLYDE); Devine, Sandra; Walsh Thomas (NHS GREATER GLASGOW & CLYDE); GREEN, Rachel (NHS NATIONAL SERVICES SCOTLAND); Powrie Ian (NHS GREATER GLASGOW & CLYDE); Jenkins Gary (NHS GREATER GLASGOW & CLYDE); Mcintyre Hazel (NHS GREATER GLASGOW & CLYDE)
Subject: SBAR Action Plan- Latest version

Colleagues

Thank you for all your hard work in providing updates and comments. Couple of points to note

The SBAR action plan is based on the paper which went to Clinical and Governance Committee on the 5th December and as such we haven't altered any of the information on the first three columns of the SBAR action plan. Some of you have came back to say that the wording is incorrect and I agree, but we need to stick this version as part of audit/ governance process. As you can see, I have left this unchanged

I have though added an extra column which gives as current position as of Jan. This will probably change to February once we have the final version. All your comments have been added into this section. Some of your comments have overlapped and therefore tried to give the best summary possible

Q22- is the water section and Elaine is going to have a go at this to ensure consistency of message

There are attachments which need to embedded in the final version and these will be added. The attachments are:

Question 1- PPVL schedule for Estates/ Facilities
Question 5 –scribe examples
Question 10- Press Release
Question 13- Line Infections/ Graph/Chart

Getting some lunch and will be back 2.45pm if you need to chat through!!

Imran
Imran Shariff
Business Manager
Board Medical Directorate
NHS Greater Glasgow and Clyde
JB Russell House,
Gartnavel Royal Hospital,
1055 Great Western Road, Glasgow, G12 0XH
[redacted]
[redacted]
Email: imran.sharif[redacted]

From: INKSTER, Teresa (NHS GREATER GLASGOW & CLYDE) [mailto:teresa.inkste[redacted]
Sent: 12 February 2019 12:26
To: Devine, Sandra; Best, Jonathan; Walsh, Tom; Vanhegan, Elaine; Green, Rachel (NHSmail); Shariff, Imran; Mcguire, Margaret
Cc: Hirst, Allyson; Cobain, Linda; Armstrong, Jennifer
Subject: [ExternaltoGGC]Re: SBAR Action Plan

Comments/amendments attached
Kind regards
Teresa

Dr Teresa Inkster
Lead Infection Control Doctor NHSGGC
Training Programme Director Medical Microbiology
Dept of Microbiology
Queen Elizabeth University Hospital
Glasgow
[redacted]

From: Devine, Sandra <Sandra.Devine[redacted]
Sent: 12 February 2019 09:28
To: INKSTER, Teresa (NHS GREATER GLASGOW & CLYDE)
Subject: FW: SBAR Action Plan

Latest version but it's not done yet.
Sandra

Sandra Devine
Associate Nurse Director
Infection Prevention and Control
[redacted]

From: Mcguire, Margaret
Sent: 12 February 2019 09:27
To: Shariff, Imran; Best, Jonathan; Devine, Sandra; Walsh, Tom; Green, Rachel; Vanhegan, Elaine
Cc: Hirst, Allyson; Cobain, Linda
Subject: FW: SBAR Action Plan

Imran, I've had a look and added a few comments, there is still a lot of detail missing. Ally is contacting Ian P but think it would help if you contacted Hazel and Rachel direct so that they are aware of our timelines. Jennifer is at home this afternoon and will be keen to look over it. The update columns needs to evidence as much as possible the improvements we have made/advice taken. I think it's still a bit weak, but once Ian and colleagues add their areas it should be stronger
Kind regards and thanks
Mags
Dr Margaret McGuire

Nurse Director
NHS Greater Glasgow and Clyde
Please note all copy messages are filed electronically and will not be read routinely. If you want to bring a matter to my attention please send directly to me.

From: Jenkins, Gary
Sent: 12 February 2019 08:48
To: Shariff, Imran; Best, Jonathan; McIntyre, Hazel; Powrie, Ian; Devine, Sandra; Walsh, Tom
Cc: Vanhegan, Elaine; Mcguire, Margaret
Subject: RE: SBAR Action Plan

I discussed this with Elaine Burt this morning and we are comfortable with the document, there is one minor change at point 24 which I have highlighted in red. Hazel or Ian may wish to comment on this further.
Thanks
Gary

From: Shariff, Imran
Sent: 11 February 2019 21:13
To: Best, Jonathan; Jenkins, Gary; McIntyre, Hazel; Powrie, Ian; Devine, Sandra; Walsh, Tom
Cc: Vanhegan, Elaine; Mcguire, Margaret
Subject: SBAR Action Plan

Colleagues, We met this afternoon and we have made some more changes to the SBAR action plan. Can you note the comments on this latest version and provide me with an update by tomorrow lunchtime. Aim is to have this a final version by tomorrow evening which gives Jane some time to review before we dispatch to HEI.
Thanks, imran

Imran Shariff
Business Manager
Board Medical Directorate
NHS Greater Glasgow and Clyde
JB Russell House,
Gartnavel Royal Hospital,
1055 Great Western Road, Glasgow, G12 0XH
[redacted]
[redacted]
Email: imran.sharif[redacted]

SBAR Action Plan submitted to Care and Clinical Governance Committee on 5th December with updated position as of January 2019

Item	Issue	Current Position as of 5th December 2017	Future Actions	Current Position- January 2019
1	PPVL rooms not compliant with SHTM standards Critical Care	Facilities colleagues confirmed that there are 10 air changes per hour and a positive pressure of 10 pascals in the PPVL rooms which is consistent with SHBN 04-01.	Included in item 2	PPVL Schedule attached 34 rooms on schedule across RHC/QUEH. 7 rooms being converted to Negative pressure rooms to differentiate between two types. See Table 1. **Table 1** RHC – Ward 2C – Room 6 RHC – CDU – Room 18 RHC – PICU – Room 5 QEUH – Medical HDU – Room 43 QEUH – Medical HDU – Room 44 QEUH – ITU 1 – Room 24 QEUH – Surgical ITU Unit 1 – Room 4 Work is ongoing and will recommence in April 2019. Ward 2A has had 4 rooms converted to Positive pressure at a cost of [redacted] Lead ICD confirmed with Chief Nurse (CN) that three rooms within RHC would be suitable for IDHC if needed.
2	PPVL rooms do not provide appropriate protection for patients with infectious diseases of high consequence (IDHC) e.g. MERS, SARS This issue also exists in the Royal Hospital for Children	IDHC should be nursed in negative pressure rooms. These are not available in QEUH. In order to address this issue in the short term a patient pathway has been agreed by the Infectious Disease (ID) Clinicians whereby patients will be routed either to GRI or Lanarkshire ID unit. Chief Nurse (CN) for Paediatrics discussing with clinical teams a pathway for children.	Heath Protection Scotland (HPS) have been sent information on these rooms and we await their advice on whether they can be used for patients with IDHC or if not what actions could be taken to modify these rooms to provide negative pressure. This advice was sought in 2016 & 17.	

3	Lack of isolation rooms in the emergency department.	ED was designed with input from clinical staff and observation of patients was a priority. There are single rooms in ED but not negatively pressured isolation rooms.	Property Procurement Facilities Management (PPFM) has commissioned a feasibility study to ascertain if negatively pressured rooms are technically feasible	Options were looked to consider conversion of existing PPVL to negative pressure facilities suitable for infectious patients. However there are currently no specific plans to develop isolation rooms within Emergency Department.
Item	**Issue**	**Current Position as of 5th December 2017**	**Future Actions**	**Current Position as of January 2019**
4	Rooms not built to the standard expected as a tertiary referral centre.	The transfer of the Infectious Diseases Unit was a late addition to the project and was not fully commissioned as an ID unit at the outset.	Actions as described in item 2.	Actions as described in item 2.
5	Microbiologists not aware of plans to upgrade areas.	Lead Infection Control Doctor (ICD) was aware of this proposal.	Work continues with input from the Coordinating ICD.	**Health Board Process** A process exists that any refurbishments are signed off by ICD/ IPCT in conjunction with the estates department. These are signed off at various stages through design to completion and handover. Final sign off is undertaken with reference to relevant SHTM's design criteria and commissioning/ validation data provided by an external contractor. A project manager or lead (usually Estates) will use Part B to identify, manage and record built environment infection control risks of a project within health care premises. The assessment will take into account the nature of the work to be undertaken and the adjacency to patient areas. The SHFN 30 HAI Scribe document will be put in place before work commences. This comprises sets and check lists. Both the Infection Prevention and Control Team and the lead clinical staff will be asked to review and approve the assessment before work commences. The size of the project will determine the amount of involvement by the IPCT, which may include regular review during the project and inspection at the end. The ICD would provide advice on any environmental sampling to be undertaken prior to areas handover to users.

6	HEPA filters in PICU for the protection of patients in the Bone Marrow Transplant Unit (BMTU) that might need critical care during treatment. The BMTU is ward also referred to as ward 2A.	HEPA filters were installed within PICU/Ward 2a week commencing 6 November 2017, within room numbers 12 and 17 – previously installed within room 18. HEPA filter still to be fitted in room 5 (access to be agreed with clinical colleagues). HEPA filters were also fitted into RHC Ward 3c week commencing 13 November 2017 within rooms 9 & 10.	Work commenced mid November 2017, therefore ahead of May 2018, as noted above.	PICU Room 5: Installation of HEPA filter is no longer required as the room has been converted to negative pressure accommodation for infectious patients. (as described in item 1 & 2) Planned work: [redacted] spend and 12 months capital plan, for the upgrade of ward 2A (Haemato–oncology\TCT) ventilation system & internal building elements to provide HEPA filtered environmental conditions suitable for use by Immuno-compromised patients with Enhanced (Positive Pressure) Single Bedrooms with En-Suite facilities, providing 10ac/hr positive pressure within each Bedroom space, and ensuring the Bedrooms are at +10Pa pressure gradient relative to the adjacent Corridors. All in accordance with design principles embodied within SHTM 03-01 guidance documentation. Outline Programme: • Feasibility\Design\Tender phase - 21 weeks from ward decant. • Construction phase - 30 weeks from award of contract. The findings of the feasibility study will be extrapolated to Ward 4C.
Item	**Issue**	**Current Position as of 5th December 2017**	**Future Actions**	**Current Position as of January 2019**
7	HEPA filters in prep room	HEPA filters have not been routinely fitted (as standard) within prep rooms, however HEPA filters are fitted within QEUH Ward 4B. Instruction required to determine whether HEPA filter should be fitted into RHC Ward 2A prep room.	A feasibility study will be undertaken to ascertain if HEPA filters can be installed in the prep room.	Feasibility Study has been tendered and estimated timescale for full feasibility and design stage is 3 months from the date of the future decant of ward. The plan will take into account full HEPA filtration of all aspects of Ward 2A (including Prep room)
8	IVs prepared in treatment room.	IVs are prepared in the preparation room but not chemotherapy which is prepared in a specialist unit.	CN paediatrics confirmed that this was the standard practice.	IVs are prepared in the preparation room but not chemotherapy which is prepared in a specialist unit.
9	Outbreak of Aspergillus associated with poor air quality	There were two cases of aspergillus associated with the ward in March 2017. This was fully investigated and was possibly associated with a leak	HPS have been contacted for advice on what would be an appropriate regime for air monitoring in this area.	ICD has confirmed from HPS that there is no sampling regimen for non ventilated areas.

		into the ceiling space which was not immediately apparent. On review of cases in the new BMTU and the unit previously located in Yorkhill there is no significant increase in the number of cases of this infection. This was fully reported as per Chapter 3 of the National Infection Prevention and Control Manual to Health Protection Scotland.		
Item	**Issue**	**Current Position as of 5th December 2017**	**Future Actions**	**Current Position as of January 2019**
10	Concern that the statement issued advised that BMT services in RHC were unaffected by issues identified in the adult BMTU.	Clarification from the NHSGGC Comms Team "To the recollection of colleagues involved, the Communications team were not briefed at the time of the release about the adult BMT move of any testing underway at the Royal Hospital for Children.	Clarification issued to the meeting attendees. No further action required. This perhaps appears to be misinterpretation of the media communication.	**Clarification from the NHSGGC Communications Team** The final line of the press release of 8th July 2015 "Bone Marrow Transplant Service Temporary Relocation" was written to make clear to media that the move of the adult service did not include the paediatric service at the Royal Hospital for Children and that the latter was not moving. "
11	HEPA filters not in place in PICU	Action complete as previously agreed and noted within point 6.		Point 6 covers the action
12	Increase in the number of line infections in Ward 2A	Two years' retrospective data were analysed in May 2017 and it was noted that there was an increase in line related infection. The initial baseline infection rate per 1000 total line days was 3.25 and this had risen to 6.33. A group led by CN Paediatrics first met in **May 2017** to review this information and put actions in place to reduce this	There are currently four work streams in place to look at key initiatives to reduce line infections in BMTU, these include: • Line Insertion and access in theatre. • Access and Maintenance of lines • Staff Education	Improvement Group has been developed to reduce Central Line Associated Bacteraemia Infections. Background The CVL QI Improvement Group was formed in May 2017 comprising of key stakeholders.. This is benchmarked against Cincinnati Children's Hospital in Ohio.

		incidence. The last 4 months (July to October) have shown improvement in infection rates. CN Paediatrics presented a paper to the Board Infection Control Committee on the 27 November 2017 outlining several work streams and the most recent infection rates in this area.	• Patient and Parent engagement **Next Steps** From 1st December 2017 every CLABSI (line associated infections) will be subject to rigorous review utilising Event Cause Analysis methodology within 72 hours of a reported CLABSI	The infection control team have been working closely with the clinical team in ward 2A since April 2017. • An infection control nurse visits ward 2A between two and four times per week and provides opportunity to observe practice and work collaboratively to make improvements where required. • A series of improvement interventions have taken place which have resulted in positive outcomes which can be shown in the data and resultant low infection rates. • IPCT have met with hemato-oncology colleagues in QUEH and BOC (January 2019) and are currently piloting a surveillance programme for PICC line infections. • Graph and minutes attached showing reduced line related infection - April 2018 data- rate of 2.15
13	Increase in the number of line infections	IPCT participating in above work. Line related surveillance was subsequently picked up by the Directorate.	Ongoing assessment of surveillance activity and resource within the IPCT to enable IPCT to respond to local clinical needs.	
Item	**Issue**	**Current Position as of 5th December 2017**	**Future Actions**	**Current Position as of January 2019**
14	Dr Redding concerned that the ongoing work would not accurately pick up any concerns.	• As above work streams in place re line infections. • IPCT audit process is in place and ongoing; this includes audit of the environment, audits of line and urinary catheter care. Audits of standard Infection Control Precautions (SIPS). • IPCT twice weekly visits. • GGC compliant with the National IPCT Manual – this lists all types of infections that should be reviewed and what should be reported if an outbreak or incident occurs.	IPCT and CN Paediatrics will continue to have a clear focus on this area.	HPS have published a nationally agreed list of alert micro-organisms which should be notified to IPCTs which may require further investigation. Hospital level analysis has been carried out by HPS using the national HAI surveillance data. Hospital attributed cases of *Clostridioides difficile* infection (CDI), *Escherichia coli* bacteraemia (ECB) and *Staphylococcus aureus* bacteraemia (SAB) for 2016, 2017 and 2018 (Q1 to Q3) were compared to peer hospitals with similar patient population using funnel plot analysis. The Queen Elizabeth University Hospital (QEUH) and the Royal Hospital for Children (RHC) were not highlighted as an exception (rate above the 95% confidence limit) in any of the plots for 2016, 2017 and 2018 (Q1 to Q3). • The peer hospitals for QEUH were Aberdeen Royal Infirmary (ARI), Forth Valley Hospital (FVH), Glasgow Royal Infirmary (GRI), Ninewells Hospital (NWH), Royal Alexandra Hospital (RAH), Royal Infirmary of

		• Weekly report to Board and Acute Directors weekly on an IPC issues throughout GGC.		Edinburgh (RIE), University Hospital Crosshouse (UHC) and Western General Hospital (WGH) • The peer hospital for RHC were Royal Aberdeen Children's Hospital and Royal Hospital for Sick Children (Edinburgh) • ECB and SAB cases were hospital attributed assigned through enhanced surveillance ECOSS webtool. For CDI cases were categorised through linkage with Scottish Morbidity records (SMR01) for a patient with CDI onset on day 3 or later following a hospital admission on day one. • The denominator was hospital level 'total occupied bed days (TOBDs)' using ISD1 data. • Funnel plot analysis was based on an over-dispersed Poisson regression model. • See Q13 in response to Line Infections
Item	**Issue**	**Current Position as of 5th December 2017**	**Future Actions**	**Current Position as of January 2019**
15	Microbiologists do not have the information to advise clinical staff on where to place immunocompromised patients.	Director of Regional Services stated that this had never been raised as an issue by clinicians within his service that care for patients who are immunocompromised. Most patients who are immunocompromised are cared for within this directorate. It was agreed by the group that placement of immunocompromised patients was a decision that should be taken by the clinical team looking after the individual patients.	Dr Peters agreed to circulate a document she had used in another board area. David Loudon (Director of PPFM) agreed to send the microbiologists a list of where the PPVL rooms were in the QEUH and RHC. It was agreed that this would be reviewed at the Regional Services Governance Forum	Guidance has been provided to microbiologists and clinicians about which rooms were suitable for which patients in relation to infection control. At the time that the original guidance was issued it was thought that rooms had 3 air changes per hour with rooms at a slightly negative pressure was sufficient. The concerns about ventilation in Ward 2A/B in Royal Hospital for Children however led lead ICD to request other high risk areas on the site be assessed to see if the issues noted in point 15 were replicated elsewhere. This assessment revealed that in early December 2018, there were varying pressures in the rooms on 5C/D. This was quickly reported to the Estates teams and the pressures were rebalanced. By 20th December 2018, it was reported that all rooms in 5C were slightly negative pressure but there were still certain rooms that should not be used for sputum positive TB patients. On 3rd January, on review of information supplied by the Estates Team, the Lead ICD reported that 5D was now also slightly negative pressure.

				The problem causing the different pressures has been identified and rectified.
16	Infection rates are not being monitored.	GGC compliant with the National IPCT Manual – this lists all types of infections that should be reviewed and what should be reported if an outbreak or incident occurs. • Every patient with a notifiable infection is reviewed and monitored. • NHSGGC is fully compliant with all elements of the national Mandatory Surveillance of Infection Programme (mainly specific surgical site and blood stream infections. • Weekly report on exceptions is sent to the Board Directors. • Monthly reports are sent to Senior Management teams. • All outbreak and incidents are reviewed by the Board, Partnership and Acute Infection Control Committees. • The most recent National Point Prevalence Survey in 2016 indicated that both the QEUH and RHC were under the national average in terms of the incidence of Hospital Acquired Infections.	ICM has invited HPS to review the NHSGGC systems for surveillance and reporting of infections – this assessment took place on the 29.11.17, the initial feedback was positive but we await the full report.	**Surveillance Undertaken by the GGC Infection Prevention and Control Team (IPCT)** <u>Definition of HAI</u> All Hospital acquired infection is defined as not being present until 48 hours after admission as a national standard **NHSGGC is fully compliant with Chapter 3 of the National Manual and applies the following definitions in managing incidents/outbreaks;** **A healthcare associated infection outbreak** • Two or more linked cases with the same infectious agent associated with the same healthcare setting over a specified time period **A healthcare infection exposure incident** • Exposure of patients, staff, public to a possible infectious agent as a result of a healthcare system failure or a near miss **A healthcare infection data exceedance** • A greater than expected rate of infection compared with the usual background rate for that healthcare location. <u>Linked Cases</u> A full assessment of epidemiological links in time, place and person is undertaken. Commonalities such as equipment, procedures, environmental exposures are investigated. Some organisms can be sent to a specialist laboratory for comparison using typing techniques. The HIIAT assessment tool is used for all incidents/outbreaks <u>Alert organism reporting and investigation</u>

				The IPCT monitor all (HAI and non-HAI) CDI, *Staphylococcus aureus* bacteraemia (SAB) and *E.coli* bacteraemia and report case totals daily to the Senior Management Team for IPC. In 2018. Triggers are in place for the four most common environmental Gram negative organisms in high risk areas and the surveillance team issue reports to the ICDs and LIPCNs The Infection Prevention and Control Nurses (IPCNs) receive prospective notification of all agreed alert organisms (as per National manual) via our IPC software package (ICNet). On receipt, the IPCNs will provide advice to clinical staff on placement of the patient as appropriate and review the case to determine if it is an HAI and therefore requires further investigation. All CDI and SAB are reported to the sector management teams weekly. This report also includes incidents under investigation and outbreaks. The monthly sector reports are tabled at local sector / service clinical governance groups for discussion. The HAIRT is a national reporting template which contains all CDI, SAB, SSI surveillance, incidents and outbreaks and routinely provided to the Board at every meeting and reviewed. A bi-monthly HAIRT is presented to the Acute and Board Clinical Governance Groups as well as the Acute, Partnerships and Board Infection Control Committees.
17	There are three air changes and chilled beam technology instead of the 6 air changes recommended.	There are three air changes in the single rooms within both QEUH and RHC.	Director of Facilities agreed to take this issue forward with NHS D&G to share learning with regards to this type of technology and draw to their attention concerns regarding cleaning of the beams.	Action complete and information shared with NHSGG&C

18	Use of cleaning agents.	NHSGGC has for several years changed the cleaning regimens each winter to include a chlorine based detergent as a strategy to reduce norovirus outbreaks. This switch commences on the 1st of November and continues until the 30 April each year or longer if the season is prolonged. This is not recommended in the National Infection Control Manual because of lack of scientific evidence but is put in place in GGC based on local site knowledge.	This policy and practice will continue unless new evidence emerges	Every winter Health Protection Scotland alert boards when the norovirus season commences. Each year in response to this, the IPCT ask facilities to change all cleaning products to one that includes chlorine. Chlorine based detergents are recommended to be used during outbreaks of norovirus (HPS National Guidance). NHSGGC use them as recommended during outbreaks but also to potentially prevent outbreaks when patients with norovirus are admitted to wards and departments. This policy continues to be implemented and reviewed. We note any emerging evidence and update practice as required.
Item	**Issue**	**Current Position as of 5th December 2017**	**Future Actions**	**Current Position as of January 2019**
19	Roles and responsibilities with regards to cleaning of the dishwashers in the ward pantries was not clear.	IPCT held an Incident Management team Meeting (IMT) on 22nd of September. Dishwashers were removed from use until they could be serviced and re-sampled.	Catering staff agreed to assume the responsibility for cleaning of the dishwashers going forward.	NHSGG&C is fully compliant with the National Monitoring of Domestic Services. Point of use water filters have been installed in Dishwashers in use in the QEUH and no issues have been identified since these have been in place.
20	Issue with dishwasher not picked up during routine monitoring.	GGC fully compliant with the National Monitoring of Domestic Services	Roles and responsibilities had been clarified and a process in now in place.	As an extra precaution dishwashers have been removed from the adult Cystic Fibrosis wards and are not used and the clinical areas in the Royal Hospital for Children.
21	Cleaning of Temperature Control Values (TCVs)	TCVs are maintained in all high risk areas and plans are in place to carry this out in all areas despite this not being mandatory. Protocols are in place to manage this process.	Agreed works within QEUH-plant room 31 to sanitise TMVs is complete once the Chlorine Dioxide has embedded into the system.	Board recognises paramount importance of patient safety and the need to ensure the water systems and controls are consistently compliant with all relevant safety standards. Board water safety is in place and water systems and processes are monitored as per national guidance Plans are in place to carry out schedule of work to TMV's (where) in 2019 once the water contamination incident is concluded and chlorine dioxide residual values are within defined parameters.

22	Water testing is not as per national guidance	Board water safety is in place and water systems and processes are monitored as per national guidance.	None	Internal review commissioned by NHSGG&C to look at the commissioning and maintenance process for water systems. Structured Project Management approach is being taken to ensure clear focus with continuation of Executive oversight. See Question 25. Board Water Safety Policy is in place and water systems and processes are monitored as per national guidance. This is verified annually by the Authorising Engineer as part of the Authorising Engineer duties (copy letter) The local water safety groups review testing results and discuss by exception what has been identified. Exception reporting for Legionella was requested by the ICD's to ensure that focus was made on matters which needed addressed. This includes all counts of Legionella serogroup 1. Pseudomonas testing has been implemented in high risk areas where flow straighteners are present in taps. ICDs will also request water testing as part of an incident involving environmental Gram negative organisms The Board Water Safety Group reviews line by line the notes of the local water safety groups .Infection Control ,Microbiology and Facilities and Estates representatives are part of this Group Every time the Water Safety Policy is reviewed the contents may be changed/amended by anyone as part of the consultation process prior to ratification at the Board Infection Control Committee Water groups continue to meet and water testing regime is ongoing as are annual authorizing engineer reviews. Significant amounts of money are spent annually on the testing regimes in place Board wide by Diagnostics and estates and Facilities Health Protection Scotland (HPS) and Health Facilities Scotland (HFS) are fully involved throughout the IMT process and Water Technical Group.

				NHS GGC is compliant with SHTM 04-01 Part B – Operational Management (Page 72) testing for Legionella guidelines and with the HSE Legionnaires disease "Microbiological Monitoring". HSG 274 Authorising Engineer for the Board has reviewed this on our sites as part of the Authorising Engineers role and responsibilities and will provide a statement to this effect today to us (11/02/2019) MAK to forward
23	Sewage leaks in institute not reported to microbiologists	Leaks in any clinical areas that required advice from an ICD are reported	Ensure reporting is ongoing.	Leaks in any clinical areas that required advice from an ICD are reported. Nurse surveillance system introduced and process now exists to monitoring infection control rates. Surveillance review at infection control meetings held regularly and supported by Infection Control Team.
24	Plumbing not replaced in Neuro Surgical Block	The Director of Regional Services advised that there is ongoing work in the neuro building that would because of its complexity, take several years to complete, in the meantime the new operating theatres were due to open in January 2018.	Works are ongoing as planned.	The previous "current position" is continuing. There is a recognised investment requirement for the infrastructure, including the drainage in the Neurosurgical Block. This has been taken through the Acute Capital Committee. The Business case process supported by the EAMS data is in process. The delivery of the works will be over an extended period of time. The completion of the new operating theatres is expected to be April 2019.
Item	**Issue**	**Current Position as of 5th December 2017**	**Future Actions**	**Current Position as of January 2019**
25	Perceived Increase in surgical site infections	Regional Services has funded 1.5 WTE surveillance nurses to carry out prospective surgical site surveillance in this area. For context, there are 3 surveillance nurses that provide this service for the rest of GGC therefore the investment in the INS to monitor SSI is significant. Although it is difficult to obtain benchmark rates for SSI in this area, continuous surveillance will pick out trends and therefore any increase.	Continue to monitor trends in surgical site infection in this area.	• Surveillance commenced in July 2016 for cranial and spinal surgery in INS and in November 2016 for major free flap surgery in OMFS. • A substantive 1.0 WTE surveillance nurse has been in post since September 2018. • Surveillance comprises in-patient and 30 day readmission to GGC hospitals. • SSI rates are reported in monthly surveillance reports and as we have now reached in excess of 25 months data , Statistical Process Control(SPC) charts are used to monitor trends. These are currently stable and within control limits.

		This is monitored via a group unique to Regional Services – the RS Surgical Site Infection Group. The group in turn reports into the Regional Service Clinical Governance Group		• The RS Surgical Site Infection Group continues to meet every quarter to discuss reports and review progress. • Surveillance was undertaken for External ventricular devices in neurosurgery and quality improvement work was undertaken. This resulted in the development of an EVD insertion care bundle and an EVD output record
26	Decontamination facilities	Most decontamination of equipment is conducted in the central Decontamination Unit or Endoscopy facilities. Respiratory equipment is easily damaged and advice from manufacturers is often difficult to implement. There should be dedicated facilities with established work flow patterns (dirty to clean). At this point in time the Decontamination group (which is a sub group of the Board Infection Control Committee) has give advice on many items of equipment and had obtained room designs which could be used if space was identified in QEUH and RHC. This has been submitted to management colleagues for consideration. In addition a list of specialist equipment that we require national advice on has been submitted to Health Protection Scotland.	Pursue HPS for advice regarding the list of equipment provided. Establish status of planning for new decontamination areas.	At this point in time the Decontamination group (which is a sub group of the Board Infection Control Committee) has given advice on many items of equipment and had obtained room designs which could be used if space was identified in QEUH and RHC. • We are currently investigating the optimum method and best equipment in line with HPS guidance which was issued in 2018. • In addition a list of specialist equipment that we require national advice on has been submitted to Health Protection Scotland. • An area for respiratory decontamination has been identified on the QEUH and RHC site and is currently awaiting sign off
Item	**Issue**	**Current Position as of 5th December 2017**	**Future Actions**	**Current Position as of January 2019**

27	Roles of IPCT have changed	The current IPCT all have Job Descriptions which have been in place for several years. There is a clear documented governance structure that has been reviewed by Price Waterhouse Cooper and approved by the Infection prevention Committees within NHSGGC. There is a clear management structure which complies with the recommendations contained within the Vale of Leven Report and the Healthcare Environment Inspectorate Standards	A review of the roles and responsibilities of the Infection Control Doctors in South Glasgow will be undertaken by the Chief of Medicine for Diagnostics. The ICM has invited HPS to undertake a review of IPC surveillance and reporting systems in place.	A review of roles and responsibilities of infection Control Doctors has taken place on the 7th December 2017 and recommendations have been taken forward. The ICD group developed an ICD job description which has been agreed by all ICDs and shared with the ICM All ICD's have Job Plans and organisation development events have taken place and continue to take place on a regular basis. Further resources are currently being identified by NHSGG&C to strengthen Infection Control team including provision of senior project management support to ensure that all of the strands of work at the QUEH including water, IC, ventilation etc is effectively coordinated. The interface between Infection Control and Estates/Facilities is also being examined with a proposal for strengthening the existing arrangements to ensure clear lines of accountability and coordination of current and future activity.

NHS Greater Glasgow & Clyde	**Paper No. 21/06**
Meeting:	**Clinical and Care Governance Committee**
Date of Meeting:	**08/06/2021**
Purpose of Paper:	**For Approval**
Classification:	**Board Official**
Sponsoring Director:	**Dr Jennifer Armstrong, Medical Director**

Paper Title

SBAR Action Plan

Recommendation

The Clinical and Care Governance Committee are asked to note the final update to the Action Plan (SBAR), in particular:

- the completion of 26/27 actions contained in the plan
- The technical limitations in regards to installation of an isolation room within the Emergency Department at Queen Elizabeth University Hospital (Action area 3)

Purpose of Paper

The Action Plan was initially presented to the Clinical and Care Governance committee on 05/12/2017 *(Paper 17/24*) following concerns raised over infection control issues at QEUH and RHC. The plan covers a wide range of themes including:

- Positive Pressured Ventilated Lobbied (PPVL) Isolation Rooms.
- Royal Hospital for Children (RHC) – Protective Isolation – Haematology Oncology Unit.
- RHC – HEPA filters in Paediatric Intensive Care Unit (PICU).
- Queen Elizabeth University Hospital (QEUH) – Ward 4B – Upgrade to the Haematology Ward.
- Single Room Specification and Location of Areas that can be used for Protective Isolation.
- Cleaning of QEUH, RHC and Office Block
- Cleaning of Dishwashers in QEUH and RHC linked to a potential outbreak of exophiala
- Water Quality and Water Testing
- Plumbing in the Neurosurgical Block
- Decontamination of Respiratory Equipment

The plan has been continuously updated by staff working across Infection, Prevention and Control and Estate and Facilities Teams and has been discussed across various groups and committees within the Board. The Clinical and Care Governance Committee also received a further update to the action plan on 05/03/19 with the Lead Infection Control doctor present at this meeting.

Key Issues to be considered

The Oversight Board Report (March 2021) has specifically documented the SBAR and the quick action taken by the Board to identify, discuss and raise these concerns. (Page 52, Paragraph 127)

The Oversight Board have also commented that the latest update to the SBAR was presented in 2019 with many of the actions showing “in progress”. The Oversight Board has therefore recommended:

- a further update of the plan (provided);
- review by the Clinical and Care Governance Committee and
- closure of the plan.

Any Patient Safety /Patient Experience Issues

None

Any Financial Implications from this Paper

There has been considerable capital programme of investment for refurbishment of Wards 2A/2B which is included in the Action Plan.

Any Staffing Implications from this Paper

None

Any Equality Implications from this Paper

None

Any Health Inequalities Implications from this Paper

None

Has a Risk Assessment been carried out for this issue? If yes, please detail the outcome.

N/A

Highlight the Corporate Plan priorities to which your paper relates

Better Care

Author: Sandra Devine
Title: Acting Infection Control Manager
Tel: [redacted]

SBAR Action Plan submitted to Care and Clinical Governance Committee with final updated position as of May 2021

Item	Issue	Current Position as of 5th December 2017	Future Actions	Final Position as of May 2021
1	PPVL rooms not compliant with SHTM standards Critical Care	Facilities colleagues confirmed that there are 10 air changes per hour and a positive pressure of 10 pascals in the PPVL rooms which is consistent with SHBN 04-01.	Included in item 2	PPVL Schedule attached 34 rooms on schedule across RHC/QUEH. 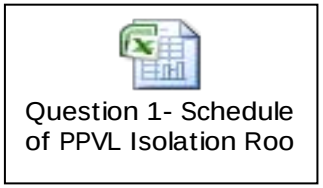 Question 1- Schedule of PPVL Isolation Roo 7 rooms have been converted to Negative pressure rooms to differentiate between two types. See Table 1. **Table 1** RHC – Ward 2C – Room 6 RHC – CDU – Room 18 RHC – PICU – Room 5 QEUH – Medical HDU – Room 43 QEUH – Medical HDU – Room 44 QEUH – ITU 1 – Room 24 QEUH – Surgical ITU Unit 1 – Room 4 Ward 2A has had 4 rooms converted to Positive pressure at a cost of [redacted]. Now undergoing complete refurbishment . Lead ICD confirmed with Chief Nurse (CN) that three rooms within RHC would be suitable for IDHC if needed.
2	PPVL rooms do not provide appropriate protection for patients with infectious diseases of high consequence (IDHC) e.g. MERS, SARS This issue also exists in the Royal Hospital for Children	IDHC should be nursed in negative pressure rooms. These are not available in QEUH. In order to address this issue in the short term a patient pathway has been agreed by the Infectious Disease (ID) Clinicians whereby patients will be routed either to GRI or Lanarkshire ID unit. Chief Nurse (CN) for Paediatrics discussing with clinical teams a pathway for children.		

3	Lack of isolation rooms in the emergency department.	ED was designed with input from clinical staff and observation of patients was a priority. There are single rooms in ED but not negatively pressured isolation rooms.	Property Procurement Facilities Management (PPFM) has commissioned a feasibility study to ascertain if negatively pressured rooms are technically feasible	Options were considered to convert existing PPVL to negative pressure facilities suitable for infectious patients. However there are currently no specific plans to develop isolation rooms within Emergency Department.
Item	**Issue**	**Current Position as of 5th December 2017**	**Future Actions**	**Final Position as of May 2021**
4	Rooms not built to the standard expected as a tertiary referral centre.	The transfer of the Infectious Diseases Unit was a late addition to the project and was not fully commissioned as an ID unit at the outset.	Actions as described in item 2.	Actions as described in item 2.
5	Microbiologists not aware of plans to upgrade areas.	Lead Infection Control Doctor (ICD) was aware of this proposal.	Work continues with input from the Lead ICD.	**Health Board Process** HAI Scribe 1 - PPVL and PPIR.docx The process is that any refurbishments are signed off by ICD/ IPCT in conjunction with the estates department. These are signed off at various stages through design to completion and handover. Final sign off is undertaken with reference to relevant SHTM's design criteria and commissioning/ validation data provided by an external contractor. A project manager or lead (usually Estates) will use Part B to identify, manage and record built environment infection control risks of a project within health care premises. The assessment will take into account the nature of the work to be undertaken and the adjacency to patient areas. The SHFN 30 HAI Scribe document will be put in place before work commences. This comprises sets and check lists. Both the Infection Prevention and Control Team and the lead clinical staff will be asked to review and approve the assessment before work commences. The size of the project will determine the amount of involvement by the IPCT, which may include regular review during the project and inspection at the end. The ICD would provide advice on any environmental sampling to be undertaken prior to areas handover to users.

Item	Issue	Current Position as of 5th December 2017	Future Actions	Final Position as of May 2021
6	HEPA filters in PICU for the protection of patients in the Bone Marrow Transplant Unit (BMTU) that might need critical care during treatment. The BMTU is ward also referred to as ward 2A.	HEPA filters were installed within PICU/Ward 2a week commencing 6 November 2017, within room numbers 12 and 17 – previously installed within room 18. HEPA filter still to be fitted in room 5 (access to be agreed with clinical colleagues). HEPA filters were also fitted into RHC Ward 3c week commencing 13 November 2017 within rooms 9 & 10.		PICU Room 5: Installation of HEPA filter is no longer required as the room has been converted to negative pressure accommodation for infectious patients. (as described in item 1 & 2) Planned work: [redacted] spend for the upgrade of ward 2A (Haemato–oncology\TCT) ventilation system & internal building elements to provide HEPA filtered environmental conditions suitable for use by Immuno-compromised patients with Enhanced (Positive Pressure) Single Bedrooms with En-Suite facilities, providing 10ac/hr positive pressure within each Bedroom space, and ensuring the Bedrooms are at +10Pa pressure gradient relative to the adjacent Corridors. All in accordance with design principles embodied within SHTM 03-01 guidance documentation.
7	HEPA filters in prep room	HEPA filters have not been routinely fitted (as standard) within prep rooms, however HEPA filters are fitted within QEUH Ward 4B. Instruction required to determine whether HEPA filter should be fitted into RHC Ward 2A prep room.		The plan will take into account full HEPA filtration of all aspects of Ward 2A (including Prep room)
8	IVs prepared in treatment room.	IVs are prepared in the preparation room but not chemotherapy which is prepared in a specialist unit.	CN paediatrics confirmed that this was the standard practice.	IVs are prepared in the preparation room; however chemotherapy is prepared in a specialist unit.
9	Outbreak of Aspergillus associated with poor air quality	There were two cases of aspergillus associated with the ward in March 2017. This was fully investigated and was possibly associated with a leak into the ceiling space which was not immediately apparent. On review of cases in the new BMTU and the unit previously located in Yorkhill there is no significant increase in the number of cases of this infection.		ICD has confirmed with HPS that there is no guidance on air sampling non specially ventilated areas.

		This was fully reported as per Chapter 3 of the National Infection Prevention and Control Manual to Health Protection Scotland.		
Item	**Issue**	**Current Position as of 5th December 2017**	**Future Actions**	**Final Position as of May 2021**
10	Concern that the statement issued advised that BMT services in RHC were unaffected by issues identified in the adult BMTU.	Clarification from the NHSGGC Comms Team "To the recollection of colleagues involved, the Communications team were not briefed at the time of the release about the adult BMT move of any testing underway at the Royal Hospital for Children.	Clarification issued to the meeting attendees. No further action required. This perhaps appears to be misinterpretation of the media communication.	**Clarification from the NHSGGC Communications Team** 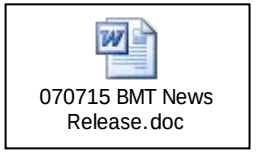 070715 BMT News Release.doc The final line of the press release of 8th July 2015 "Bone Marrow Transplant Service Temporary Relocation" was written to make clear to media that the move of the adult service did not include the paediatric service at the Royal Hospital for Children and that the latter was not moving. "
11	HEPA filters not in place in PICU	Action complete as previously agreed and noted within point 6.		Point 6 covers the action

Item	Issue	Current Position as of 5th December 2017	Future Actions	Final Position as of May 2021
12	Increase in the number of line infections in Ward 2A	Two years' retrospective data were analysed in May 2017 and it was noted that there was an increase in line related infection. The initial baseline infection rate per 1000 total line days was 3.25 and this had risen to 6.33. A group led by CN Paediatrics first met in **May 2017** to review this information and put actions in place to reduce this incidence. The last 4 months (July to October) have shown improvement in infection rates. CN Paediatrics presented a paper to the Board Infection Control Committee on the 27 November 2017 outlining several work streams and the most recent infection rates in this area.		All line infections with gram negative organisms are subject to a RCA review. This process is completed with clinical staff and IPCT staff. Report is sent monthly to the Director of W & C for onward distribution to clinical staff within the unit. SPC which are based on methodology provided by ARHAI Scotland is used to assess trends in this area. 2021-05-06 Paed Haem-onc SPCs.pdf clabsi chart.doc
13	Increase in the number of line infections	IPCT participating in above work. Line related surveillance was subsequently picked up by the Directorate.	Ongoing assessment of surveillance activity and resource within the IPCT to enable IPCT to respond to local clinical needs.	

Item	Issue	Current Position as of 5th December 2017	Future Actions	Final Position as of May 2021
14	Concerns that the ongoing work would not accurately pick up any concerns.	• As above work streams in place re line infections. • IPCT audit process is in place and ongoing; this includes audit of the environment, audits of line and urinary catheter care. Audits of standard Infection Control Precautions (SIPS). • IPCT twice weekly visits. • GGC compliant with the National IPCT Manual – this lists all types of infections that should be reviewed and what should be reported if an outbreak or incident occurs. • Weekly report to Board and Acute Directors weekly on an IPC issues throughout GGC.	IPCT and CN Paediatrics will continue to have a clear focus on this area.	HPS have published a nationally agreed list of alert micro-organisms which should be notified to IPCTs which may require further investigation. Hospital level analysis has been carried out by HPS using the national HAI surveillance data. Hospital attributed cases of *Clostridioides difficile* infection (CDI), *Escherichia coli* bacteraemia (ECB) and *Staphylococcus aureus* bacteraemia (SAB) for 2016, 2017 and 2018 (Q1 to Q3) were compared to peer hospitals with similar patient population using funnel plot analysis. The Queen Elizabeth University Hospital (QEUH) and the Royal Hospital for Children (RHC) were not highlighted as an exception (rate above the 95% confidence limit) in any of the plots for 2016, 2017 and 2018 (Q1 to Q3). • The peer hospitals for QEUH were Aberdeen Royal Infirmary (ARI), Forth Valley Hospital (FVH), Glasgow Royal Infirmary (GRI), Ninewells Hospital (NWH), Royal Alexandra Hospital (RAH), Royal Infirmary of Edinburgh (RIE), University Hospital Crosshouse (UHC) and Western General Hospital (WGH) • The peer hospital for RHC were Royal Aberdeen Children's Hospital and Royal Hospital for Sick Children (Edinburgh) • ECB and SAB cases were hospital attributed assigned through enhanced surveillance ECOSS webtool. For CDI cases were categorised through linkage with Scottish Morbidity records (SMR01) for a patient with CDI onset on day 3 or later following a hospital admission on day one. • The denominator was hospital level 'total occupied bed days (TOBDs)' using ISD1 data. • Funnel plot analysis was based on an over-dispersed Poisson regression model. • See Q13 in response to Line Infections

Item	Issue	Current Position as of 5th December 2017	Future Actions	Final Position as of May 2021
15	Microbiologists do not have the information to advise clinical staff on where to place immunocompromised patients.	Director of Regional Services stated that this had never been raised as an issue by clinicians within his service that care for patients who are immunocompromised. Most patients who are immunocompromised are cared for within this directorate. It was agreed by the group that placement of immunocompromised patients was a decision that should be taken by the clinical team looking after the individual patients.	The attached document in the next section will continue to be reviewed and updated.	 patient-placement-s op-v1-amended-18-
16	Infection rates are not being monitored.	GGC compliant with the National IPCT Manual – this lists all types of infections that should be reviewed and what should be reported if an outbreak or incident occurs. • Every patient with a notifiable infection is reviewed and monitored. • NHSGGC is fully compliant with all elements of the national Mandatory Surveillance of Infection Programme (mainly specific surgical site and blood stream infections. • Weekly report on exceptions is sent to the Board Directors. • Monthly reports are sent to Senior Management teams. • All outbreak and incidents are reviewed by the Board, Partnership and Acute Infection Control Committees. • The most recent National Point Prevalence Survey in 2016 indicated that both the QEUH and RHC were under the national average in terms of the incidence of Hospital Acquired Infections.	In April 2021 the IPCT approached ARHAI to develop early warning systems for high risk units and we hope to pilot this technology in the coming months	**Surveillance Undertaken by the GGC Infection Prevention and Control Team (IPCT)** In 6a and PICU a novel surveillance technique advised by ARHAI was implemented (see item 12). All other mandatory systems are in place.

Item	Issue	Current Position as of 5th December 2017	Future Actions	Final Position as of May 2021
17	There are three air changes and chilled beam technology instead of the 6 air changes recommended.	There are three air changes in the single rooms within both QEUH and RHC.		No further action.
18	Use of cleaning agents.	NHSGGC has for several years changed the cleaning regimens each winter to include a chlorine based detergent as a strategy to reduce norovirus outbreaks. This switch commences on the 1st of November and continues until the 30 April each year or longer if the season is prolonged. This is not recommended in the National Infection Control Manual because of lack of scientific evidence but is put in place in GGC based on local site knowledge.	This policy and practice will continue unless new evidence emerges	Every winter Health Protection Scotland alert boards when the norovirus season commences. Each year in response to this, the IPCT ask facilities to change all cleaning products to one that includes chlorine. Chlorine based detergents are recommended to be used during outbreaks of norovirus (HPS National Guidance). NHSGGC use them as recommended during outbreaks but also to potentially prevent outbreaks when patients with norovirus are admitted to wards and departments. This policy continues to be implemented and reviewed and was extended to include all areas during 2020 & 2021 in response to the COVID 19 pandemic. We note any emerging evidence and update practice as required.
19	Roles and responsibilities with regards to cleaning of the dishwashers in the ward pantries was not clear.	IPCT held an Incident Management team Meeting (IMT) on 22nd of September. Dishwashers were removed from use until they could be serviced and re-sampled.	Catering staff agreed to assume the responsibility for cleaning of the dishwashers going forward.	NHSGG&C is fully compliant with the National Monitoring of Domestic Services. Point of use water filters have been installed in Dishwashers in use in the QEUH and no issues have been identified since these have been in place. As an extra precaution dishwashers have been removed from the adult Cystic Fibrosis wards and are not used and the clinical areas in the Royal Hospital for Children.
20	Issue with dishwasher not picked up during routine monitoring.	GGC fully compliant with the National Monitoring of Domestic Services	Roles and responsibilities had been clarified and a process in now in place.	

Item	Issue	Current Position as of 5th December 2017	Future Actions	Final Position as of May 2021
21	Cleaning of Temperature Control Values (TCVs)	TCVs are maintained in all high risk areas and plans are in place to carry this out in all areas despite this not being mandatory. Protocols are in place to manage this process.	Continued to be reviewed by the board water safety group and the water technical group.	Board recognises paramount importance of patient safety and the need to ensure the water systems and controls are consistently compliant with all relevant safety standards. Board water safety is in place and water systems and processes are monitored as per national guidance
22	Water testing is not as per national guidance	Board water safety is in place and water systems and processes are monitored as per national guidance.	None	NHS GGC is compliant with SHTM 04-01 Part B – Operational Management (Page 72) testing for Legionella guidelines and with the HSE Legionnaires disease "Microbiological Monitoring". HSG 274 The local water safety groups review testing results to discuss anything any exception reports. This includes all counts of Legionella serogroup 1. Pseudomonas testing has been implemented in high risk areas where flow straighteners are present in taps. Authorising Engineer for the Board has reviewed this on our sites as part of the Authorising Engineers role and responsibilities and has provided a statement to Estates and Facilities.

Item	Issue	Current Position as of 5th December 2017	Future Actions	Final Position as of May 2021
24	Plumbing not replaced in Neuro Surgical Block	The Director of Regional Services advised that there is ongoing work in the neuro building that would because of its complexity, take several years to complete, in the meantime the new operating theatres were due to open in January 2018.	Planned replacement of the INS announced in May 2021	Planned replacement of the INS announced in May 2021 X4 New Theatres were commissioned in June 19.
25	Perceived Increase in surgical site infections	Regional Services has funded 1.5 WTE surveillance nurses to carry out prospective surgical site surveillance in this area. For context, there are 3 surveillance nurses that provide this service for the rest of GGC therefore the investment in the INS to monitor SSI is significant. Although it is difficult to obtain benchmark rates for SSI in this area, continuous surveillance will pick out trends and therefore any increase. This is monitored via a group unique to Regional Services – the RS Surgical Site Infection Group. The group in turn reports into the Regional Service Clinical Governance Group	Continue to monitor trends in surgical site infection in this area.	• Surveillance commenced in July 2016 for cranial and spinal surgery in INS and in November 2016 for major free flap surgery in OMFS. • A substantive 1.0 WTE surveillance nurse has been in post since September 2018. • Surveillance comprises in-patient and 30 day readmission to GGC hospitals. • SSI rates are reported in monthly surveillance reports. Statistical Process Control(SPC) charts are used to monitor trends. • The RS Surgical Site Infection Group continues to meet every quarter to discuss reports and review progress. • Surveillance was undertaken for External ventricular devices in neurosurgery and quality improvement work was undertaken. This resulted in the development of an EVD insertion care bundle and an EVD output record

Item	Issue	Current Position as of 5th December 2017	Future Actions	Final Position as of May 2021
26	Decontamination facilities	Most decontamination of equipment is conducted in the central Decontamination Unit or Endoscopy facilities. Respiratory equipment is easily damaged and advice from manufacturers is often difficult to implement. There should be dedicated facilities with established work flow patterns (dirty to clean). At this point in time the Decontamination group (which is a sub group of the Board Infection Control Committee) has give advice on many items of equipment and had obtained room designs which could be used if space was identified in QEUH and RHC. This has been submitted to management colleagues for consideration. In addition a list of specialist equipment that we require national advice on has been submitted to Health Protection Scotland.		At this point in time the Decontamination group (which is a sub group of the Board Infection Control Committee) has given advice on many items of equipment and had obtained room designs which could be used if space was identified in QEUH and RHC. An area for respiratory decontamination has been allocated on the QEUH and RHC site.

Item	Issue	Current Position as of 5th December 2017	Future Actions	Final Position as of May 2021
27	Roles of IPCT have changed	The current IPCT all have Job Descriptions which have been in place for ten years. There is a clear documented governance structure that has been reviewed by Price Waterhouse Cooper and approved by the Infection prevention Committees within NHSGGC. There is a clear management structure which complies with the recommendations contained within the Vale of Leven Report and the Healthcare Environment Inspectorate Standards	Review of structure being undertaken by NHS Board in response to the recommendations contained in the SG Oversight Board Report.	Lead ICD to be appointed in June 2021 when current post holder takes up a promoted post. All ICD's have Job Plans and organisation development events have taken place and continue to take place on a regular basis. SBAR re further resources are currently being identified by NHSGG&C to strengthen the Infection Control team including provision of senior project management support to ensure that all of the strands of work at the QUEH including water, IC, ventilation etc is effectively coordinated and the requirement to NHS Assure going forward are met. Designated business manager to support the work of the IPCT has been appointed and will take up post in June 2021.

NEW SOUTH GLASGOW HOSPITAL

Clinical Output Specification

AREA	CRITICAL CARE DEPARTMENT

1. INTRODUCTION

1.1 Services Provided

The Critical Care Facility within the New Southern General Hospital will deliver services currently delivered from Intensive Care Units (ICU's) and Surgical High Dependency Units (HDU's) at the current Southern General Hospital, Victoria Hospital and Western Infirmary. In addition it will also provide a Medical High Dependency Unit - which is not a feature of any current models of care - and be co-located (share core entrance, administrative and support space, etc) with Coronary Care (CCU).

All of the accommodation within the Critical care Unit is specified in the Schedule of Accommodation, listed under "Critical Care".

The Critical Care Facility (CCF) will provide accommodation to meet the needs of acutely ill adult inpatients who have single or multiple organ failure as a result of elective intervention, trauma or acute illness.

Co-locating all critical care services together facilitates the management of patients by specialist intensive care and cardiology staff, recognises economies of scale, increases flexibility around bed and staffing requirements and provides an ideal multi-professional training environment for clinicians from a wide range of specialties.

In order to realise these and other advantages it is important that the CCF be located on a single floor and operate as a single unit, i.e. not distinct ITU, HDU, etc. (Although these bed definitions are listed separately in the attached Schedules of Accommodation for clarity) It will include a single reception area that will be staffed 24 hours a day and act as a central focus for administrative functions and single point of contact for the unit. It should be noted that 24 hour staffing of this admin facility will be only feasible as a result of the economies of scale associated with bringing multiple sites and services admin resources together.

Within the unit, patients will optimally be managed in groups of 10 in "pods" that facilitate a high level of visibility and clinical management by the responsible medical and nursing staff.

CCU will be 100% single rooms (with en-suite)

At this time discussion is still on-going with local Clinicians around single room provision for ICU and HDU areas. National guidance is clear on the requirement for 100% single rooms however staff remain concerned that this model would pose challenges. Any change to 100% single rooms would need to be agreed by the Scottish Government. Therefore, although discussions are ongoing, it is assumed

that ICU/HDU will be 100% single rooms (with glass walls and frontage to allow for optimum patient visibility).

At present, the preferred clinical model would see 2 out of the 10 beds in each of three “pods” configured as isolation rooms with associated gowning lobbies.

Beds within the facility should be as generic as possible and whilst some will be clearly equipped to deliver level 3 (ICU) and some level 2 (HDU) care, one “pod” (10 beds) will be up-scaleable from level 2 to level 3 without modification to support daily and longer-term changes in the patient cohort.

The facility will also include an area identified specifically for post-operative patients that will have a dedicated cleaning regime and support the separation of elective and emergency care patients. The separation of elective and emergency patients is an important element of the overall model of care for the new hospital as this separation will allow the Board to plan for optimal utilisation of all elective services, facilities, etc, e.g. Operating lists. It should be noted that this detail is provided for information only within this document, as the post-surgical area may change on a daily/weekly basis as its designation will be an operational decision and it will not be characterised by any specific design elements/signage. (Further underlining the requirement for optimal flexibility throughout the unit)

The Critical Care Facility will be staffed by teams of nurses who have come together from all of the various facilities that it is superseding. In future these staff will not be recognised as either ICU or HDU specific staff but Critical Care staff – able to work flexibly throughout the unit. The facility will similarly be supported by teams of medics who have again come from other facilities and will include intensivists, surgeons, anaesthetists and physicians, with the medical model employed similarly requiring a high level of flexibility and cross-cover.

A range of additional clinical staff will also be required to support a multi-disciplinary approach to care delivery within the unit who will face similar challenges. These are likely to include AHP, imaging and pharmacy staff, etc.

1.2 Scope of Service

The critical care accommodation provides Level 2 (HDU and CCU) and Level 3 (ICU) beds[1] for adult inpatients who require support as a result of elective or emergency intervention, trauma or acute illness. Each bed is equipped with life support, monitoring, medical gases and other equipment configured to conform to infection control, health and safety and other standards and legislation. This generic configuration enables flexibility of bed usage such that patients can move from one level of care to another by means of adjusting staffing ratios without the inevitable need to move to a different area in the department.

The critical care facility is staffed by specialist medical, nursing and AHP personnel, with changing facilities and other accommodation for these staff available within the unit/immediately adjacent to it, to prevent them having to leave the clinical area as far as possible.

[1] Comprehensive Critical Care, DH 2000

Relatives and carers are catered for in sitting rooms adjacent to the area, with interview rooms also provided within the body of the unit. These relative/carer areas recognise the stresses and needs of these individuals who have a friend or family member in critical care as well as the needs of staff who must, throughout their care episode, communicate, interact with and support them.

1.3 Specific Exclusions

The service will not provide care for children 16 years and under.

Cardiac surgical and coronary intervention patients will be cared for at The Golden Jubilee Hospital.

Neurosurgical patients requiring critical care will continue to be treated in the neuroscience block (however there will be a link for staff between the neuroscience critical care and the facilities in the new South Glasgow Hospital).

Patients in renal failure as a primary presentation will be cared for in the renal department.

Dedicated overnight accommodation for family/carers will be provided in separate designated overnight accommodation.

2. LOCATION AND LINKS

2.1 Clinical Facility Requirements

The required configuration for the Critical Care Facility (ICU, SHDU, MHDU and CCU is a single floor location with well defined routes to other areas.

For the facility:

- There will be a single reception area with associated waiting space and WC facilities for relatives and visitors at the entrance.
- Additionally there will be a range of private interview rooms/relative/carer spaces to support often very difficult meetings with clinical staff. These should be provided both within the shared entrance core and evenly throughout the facility.
- There will be discrete access points for different patient/staff groups, supplies, etc to prevent, as far as possible, inappropriate mixing of people, services, etc
- There will be central staff changing and rest areas as well as a range of toilets distributed throughout the facility.
- There will be storage areas that may be provided centrally and/or throughout the facility as appropriate to minimise travel distances.

Public access to all areas will be controlled at all times with e.g. proximity card access and a video-entry phone, although all internal doors on main patient access routes will be capable of opening and closing automatically to ease the transfer of critically ill patients whilst minimising the possibility of bed-related damage.

The other main components of the department are described below.

It should be noted that, although these are described as discrete components, primarily for reasons of clarity, that the unit must appear completely seamless and

function as a single CCF with no obvious physical or operational “barriers” between the ITU and HDU components.

It is recognised however, due to the very different patient needs and clinical pathology, that CCU – whilst sharing all support accommodation and being functionally aligned to the remainder of the CCF – will medically be managed separately and configured as 100% single rooms with en-suite facilities. It will also have discrete office and storage facilities to allow it to function as a separate operational clinical unit.

2.1.1 Intensive Care Unit (ICU) (Level 3)

20 beds in two “pods” of 10, 2 of which are single rooms with gowning lobbies and the remainder of which are single bed rooms with glass walls and glass frontage.

Each patient room will have two articulated arms carrying medical gases, power, monitoring and data outlets

The rooms should be clustered in 2 groups of 10 with support accommodation such as utility rooms, storage, interview rooms etc. shared between the clusters and readily accessible from each cluster

Staff facilities including a resource room, meeting / interview room and staff bases will be provided between the clusters

All patient rooms must have access to natural light and Level 2 rooms should preferably have a view.

The facility will need to meet all current Scottish Health Planning / Health Building Note on radiological protection issues and Health Board Radiological Protection Officer advice.

2.1.2 Medical HDU (Level 2) and Surgical HDU (Level 2)

39 beds in single rooms (as above) configured in 4 “pods” that meet the requirements of infection control whilst ensuring good staff/ patient visibility

2 rooms in each of three pods with gowning lobbies and en-suite shower and WC’s. 2 rooms in the remaining pod with en-suite shower and WC’s. (No gowning lobbies)

As described above, the beds should be grouped in clusters of 10, as far as possible, with support accommodation shared between clusters, including assisted shower/WC facilities

All other staff and support facilities will be similar to that listed under ICU with the addition of a patient pantry and regeneration area

2.1.3 Coronary Care (Level 2)

- 20 beds in single rooms with en-suite facilities. The single bedrooms will have glass walls and frontage to allow maximum patient visibility.
- All other staff and support facilities will mirror that of the intensive care area with the addition of a patient pantry and regeneration area.

2.1.4 Shared Facilities and Offices

- Staff changing and facilities will be shared amongst all areas.
- There will also be offices, workstations, outreach accommodation, a seminar room plus research and interview accommodation. There should be access to the seminar room without having to walk through the department.

- There will be an equipment service room for the Critical Care Facility (CCF). These facilities can be located centrally and will be managed by Clinical Physics staff.
- Offices should have access to natural light.
- Staff accommodation must be secure and access controlled.
- Routes and flows within the department should be separated such that patients and staff can move freely without disturbance from the general public.

2.1.5 Future Flexibility / Changes

In order to allow for future upgrading of Level 2 (HDU) beds to Level 3 (ICU) and / or to provide immediate operational flexibility, provision should be made to equip one HDU "pod's" overhead services (10 beds) to Level 3 standards as noted previously.

This pod should ideally be located towards the ITU "end" of the HDU beds, recognising the operational reality of a hierarchy of patients needs from high – low, without any obvious clinical barriers, in a single facility that is able to flex to meet demands as individual patients needs change.

It is assumed that all level 2 beds will be equipped to a specification that allows them to accommodate patients during a pandemic crisis.

It is further recognised that the co-location of CCU within the CCF recognises short-medium term service flexibility but also provides an option around the future expansion of ITU/HDU as required in the longer term through the possible re-location/re-provision of some/all CCU beds/other level 2/3 beds.

2.2 INTERNAL RELATIONSHIPS

2.2.1 Clustering

From the Critical Care Area there should be well-defined routes to/from theatres, radiology, emergency department, acute assessment and the wards. These routes should be wide enough to allow the passage of two fully equipped intensive care beds.

2.2.2 Layout Criteria

A number of approaches to how the critical care area should be arranged will exist. In terms of user requirements and needs however, some key factors and issues should be kept in mind:

Frequently used support rooms, such as dirty and clean utility, disposal hold, linen etc should be as near as possible to the group of rooms served

Generally, staff changing and facilities should be convenient to all of the areas served

The position / location of offices not directly associated with clinical service delivery and the seminar room is not critical and can be flexed within reason to support effective clinical design solutions

Store areas may be split into multiple locations in order to reduce travel distances

Routes throughout the area need to be efficient and discrete

The design should reflect a single functional Critical Care Facility and realise all of the options around flexibility and economies of scale that this model offers

The Schedule of Accommodation also includes a range of comments to support then appropriate configuration and location of individual rooms/spaces.

3. ACCESS & KEY DEPARTMENTAL RELATIONSHIPS

3.1 Functional Relationships

Close to	Reason	*Category
Theatres	Patient transfer	1 (could be close by on floor above/below linked by lifts)
Imaging (especially CT)	Patient transfer	1
Emergency Complex	Rapid patient and staff transfer	1 (could be close by on floor above/below linked by lifts)
Wards	Patient transfer	2
Renal Ward	Patient transfer	2
Endoscopy	Equipment transfer	3
Stroke ward	Synergy and flexibility	3

*1 = Essential
*2 = Important
*3 = Desirable

In addition the requirement for an enclosed link to both Neurosciences and Maternity/Gynaecology is regarded as essential.

3.2 Access Requirements

Patients and relatives will require to access the facility 24 hours a day as will other members of the clinical team.

A distinct advantage associated with the administration of a single CCF is seen to be the pooling of administrative resources and consequently the ability to provide a 24 hour staffed reception area. This area should be welcoming but also capable of being secured overnight. It should also be able to provide single worker protection for an overnight receptionist or to become redundant overnight with remote access being possible through a “switched” link to within the clinical areas that will always be staffed 24 hours.

Pharmacy and pathology needs will be met via the pneumatic tube system, although local testing, e.g. blood gas analysis can be conducted in the local status laboratory.

The vacuum tube system should be available to all identified “pods” and located within the staff base areas.

The hospital-wide security policy will inform access control requirements for both the hospital and department out of hours.

Routes within and between the department must allow for the separation of relatives, FM, staff and patients. Patient routes must be wide enough to allow the passage of two critical care beds. Bed lifts must be sized to accommodate a fully laden critical care bed and attendant staff. There must be sufficient numbers of lifts (staff and

beds) correctly configured to ensure that journey times are kept to an absolute minimum.

Blood/blood products will be made available to the unit through an identified “blood bank fridge” facility that should be located centrally, to minimise critical care staff transfer distances. This unit should conform to all appropriate guidance regarding performance, monitoring, alarms, etc.

4. SERVICE TRENDS & STRATEGY

Current data and clinical experience indicates that the future of critical care delivery is likely to see:

- An increase in volume of consultant-led care within critical care areas
- A continued increase in the standards of care required
- An increase in the lengths of stay for the sickest patients
- An increase in admissions
- An overall reduction in the acuity and “levels of sickness” of critical care patients

In summary, this is likely to result in the overall demand for critical care services rising in the future, although those patients admitted to facilities may not be as sick as they have been historically. This underlines the need for increasing flexibility of accommodation within critical care areas.

5. HOURS OF SERVICE & WORK PATTERNS

This is a 24-hour day, 365 days a year service.

6. CARE MODEL, PATHWAY & PATIENT FLOWS

6.1 Care Model

Patient episodes of care may be either emergency or elective, planned or unplanned and the level of support may range from single organ to multi-organ failure.

Patients may be admitted:

Directly from another centre via ambulance or helicopter

Following deterioration at general or specialist ward level

From the emergency department or acute receiving units

From theatre or interventional radiology – planned and unplanned

Unplanned admissions are assumed to be infected until proven otherwise and will be nursed in source isolation. Planned elective patients will have been screened pre-admission as part of their pre-admission workup and will be admitted into the designated “post-surgical” area. (NB This is an operational definition of an area that will comprise level 2 and level 3 beds but that may change to support service delivery and cleaning regimes on a frequent basis)

Level 3 patients are nursed on a ‘one-to-one’ basis and it is appropriately assumed that these patients will be bedbound and will not require shower and WC facilities – all of which will be provided whilst they remain in bed.

Level 2 patients will be nursed 2 or 3 to 1, depending on severity of illness, and will make use of assisted hygiene and WC accommodation infrequently as required. Again, these patients will normally be washed in their bed or at the immediate bedside.

“Shared” toilet facilities will be used very infrequently as, patients deemed fit enough to access a toilet outwith their immediate bed space will generally be fit enough to be transferred out of the facility. In recognising an increase trend towards “fitter” patients being admitted to the CCF however a small number of rooms within the HDU component of the facility will have en-suite provision.

The other general exception to this rule are CCU patients – who will be cared for in single rooms with en-suite facilities.

The provision of a small number of rooms with en-suite facilities within the overall CCF as well as the en-suites within the CCU component will provide further flexibility to the whole unit, offering en-suite options to any patient whose specific clinical circumstances may deem this appropriate.

All patients within the Facility will be under the care of Consultant Specialist staff.

Coronary Care patients will generally be transferred either from the emergency department or inpatients wards. They will generally be nursed on a ‘2 to 1’ basis (dependent upon acuity) and will be under the care of Consultant Cardiology staff with Intensivist support.

6.2 Patient / Process Flow & Service Delivery

Unplanned Admissions

Unplanned admissions to critical care can come from all the areas listed in 6.3. They will be transferred on a trolley or a bed.

Once improved they will be transferred to an inpatient ward.

It is not anticipated that patients will move within the CCF as their condition deteriorates or improves in recognition of the flexibility that the unit is trying to achieve. However, this may be required on occasions on recognise an optimum care model.

On arrival in the CCF, patients will be attached to monitoring systems, ventilatory support as required (endotracheal intubation may be necessary) and supporting medication, as required. They will be reviewed by a Consultant Intensivist as soon as possible after admission.

A multidisciplinary treatment plan and care pathway will be devised in consultation with appropriate parties. Intravenous and arterial cannulation will be carried out at the bedside under ultrasound control.

Wherever possible imaging will be carried out at the bedside but it may be necessary to transfer the patient to CT, endoscopy, theatres or interventional radiology for further diagnostic tests and treatment, therefore routes should be rapid and discrete.

As the patients' condition improves they will either become Level 2 and be cared for as previously described or be transferred to the ward.

Relatives and carers will have 24 hour access to the department and if discussions are required between the clinicians and the family these will take place in the interview rooms previously identified within the central administrative core.

Waiting accommodation should be sited at the entrance to the department.

Overnight accommodation for relatives will be available in the accommodation centre on a separate part of the site.

Nursing care will be provided on a 1:1 or 1:2-3 basis, as previously described, 24 hours a day.

6.3 Admissions

Coronary Care patients will come from the emergency department, emergency medical complex or inpatient wards. Their treatment plan and care pathway will be led by a Consultant Cardiologist, endotracheal intubation will not be supported but otherwise the description above applies. If their condition deteriorates, CCU patients may be transferred to Level 3 care or the Golden Jubilee Hospital.

Planned Admissions

Planned admissions will be booked in advance, according to the admission policy. The normal route would be from theatres or interventional radiology.

All care and flows as described for unplanned admissions will apply.

7. DESIGN GUIDANCE

7.1 Design Requirements & Guidance

The technological nature of the CCA may be unpleasant therefore when designing these facilities the patient experience is taken into account together with that of their relatives and carers. The emphasis is on providing comfortable, pleasant but safe accommodation for patients. Particular care should be given to providing a therapeutic environment, whilst considering the needs of staff and the impact that working conditions have on job satisfaction, recruitment and retention.

Additionally, consideration should be given to alleviating fear and anxiety, maximising security and safety, reducing boredom and creating a healing environment. Addressing gender, cultural and religious diversity is also a consideration.

7.2 Environmental and Services Requirements

These should correspond to the standards described in the relevant SHPN's. HTMs and other technical guidance and the technical output specification for this project. Please see separate document re guidance. Specific requirements may however be mentioned separately in the Room Descriptions section of this COS.

The Whole Hospital Policy sets out common standards, such as power and data point requirements, that are to be applied throughout this project. In addition

consideration must be given to protecting the privacy and dignity of patients through sound attenuation measures to ensure speech privacy in patient rooms and interview rooms where patients and / or relatives and clinicians have private discussions.

The design also needs to take account of the need to create a pleasant environment for the patients and staff by means of good design and lighting and access to natural light and views as far as possible.

8. ACCOMMODATION REQUIREMENTS

8.1 Intensive Care (Level 3)

Critical Care Bed Area: single room: Isolation (access via gowning lobby)

Single rooms and lobbies are required for isolation and should be rectangular in shape (minimum area without lobby of 26m^2) with entrances wide enough to allow bulky equipment to pass easily e.g. mobile imaging machine – at least a door and a half. The door opening should also be sufficient to allow the passage of the bed and equipment. An island bed layout is preferred to enable good staff access around the patient and permit space for procedures to be undertaken from all sides. A clinical hand wash basin (CHWB) with automatic taps should be provided in each room. An overhead hoist is required for lifting patients and the recommended ceiling height is therefore 3m. Windows and natural light are essential in all rooms to aid patient orientation. Outside views are desirable and the windows should be large enough to enable patients to view the outside.

Each bed requires a ceiling or floor mounted medical supply unit to provide sufficient socket outlets and connection to an UPS system for the wide range of equipment in use and to allow unimpeded access to the patient by all staff. In selecting a medical supply unit it is important to ensure that it is ergonomically satisfactory for all staff access. Water proof floor sockets should also be provided.

Equipment may include syringe and volumetric pumps, an electric bed, a ventilator, an air mattress, a dialysis/filter machine, humidifier, suction machine and a television. The medical supply unit supplies medical gases and electrical socket outlets thereby allowing unimpeded access to the patient by all staff. Five rooms should be plumbed for use of a dialysis machine which should be distributed between the ICU and SHDU and HDU components of the department.

Each bed space requires the following equipment located within a medical supply unit adjacent to the bed head:

multiparameter monitoring
ventilation and humidification equipment
infusion and syringe pumps
2 high pressure vacuum points
2 x oxygen outlets
2 x 4 bar air outlets
feeding pump
blood warmer (2 per “pod” of 10 beds)
drugs storage space

Additional equipment required is an electric bed capable of chair position and Trendelenberg position and a pressure relieving mattress, a clinical hand wash basin, a PC, telephone for internal and external calls, a TV socket and nurse call system.

Gowning lobbies require a clinical hand wash basin (CHWB), plastic apron dispenser/gloves and disposal facility. Ceilings and windows should be sealed. Doors should be tight fitting with seals to minimise air transfer.

Other equipment used occasionally at the bedside includes an EEG machine, mobile imaging, ultrasound/echocardiography, endoscopy, defibrillators and haemodialysis/ haemofiltration machines.

Storage space is required for small amounts of medical and surgical supplies for the treatment of each patient.

Variable overhead bed head lighting is also required.

Radiation protection - The facility will need to meet all current Scottish Health Planning / Health Building Note on radiological protection issues and Health Board Radiological Protection Officer advice.

100% visual privacy should be maintained at patient level.

Visibility – uninterrupted views of the patient from the communication base is preferred.

Noise reduction and auditory privacy at each bed space.

Materials that are easy to clean thereby reducing the risk of HAI.

Storage space is required for small amounts of medical and surgical supplies for the treatment of each patient.

Staff Resource Room

This room will be equipped as described for a single person office with the addition of a second workstation and computer, internet access and bookshelves for periodicals etc. Staff will ‘hot desk’ and may use this facility, which should be located behind the main staff base, for quieter, private, discussions and work.

Clean Utility x 2

The clean utility should provide space for preparing trolleys for sterile procedures, preparing and checking drugs and for the storage of sterile supplies and procedure packs. Controlled drugs in a secure cupboard are also stored here as are medical and surgical supplies. The space should be accessible from the communications bases and bed areas. Small quantities of supplies may also be held near the bed space for immediate use. Empty pharmacy boxes may be kept here for collection by pharmacy porter. A CHWB with automatic taps is required in the clean utility.

Dirty Utility with urine testing/equipment cleaning x 1

The dirty utility provides facilities for the disposal of the contents of bedpans, urine bottles, vomit bowls, wash basins, etc. It should be situated close to patient areas and use a bedpan macerator or bedpan washer / disinfector. Clean disposable or non-disposable items e.g bedpans, urine bottles, vomit bowls should not be stored here, to reduce the risk of HAI. Space for holding materials for disposal or reprocessing should be limited as they should be taken to the disposal hold to await collection. 'Sharps' containers can be stored in and collected from the dirty utility or disposal hold, dependant upon hospital policy. Sufficient space should be able to accommodate soiled linen skips.

This room may also be used for urine testing and holding specimens. These should be zoned separately within the room. It can also be used as a holding bay for contaminated clinical equipment where it is cleaned prior to being taken to the equipment service room for maintenance.

Bulk Supplies Store

This bulk supplies area is a holding store for medical and surgical supplies and intravenous fluids from which to stock the clean utility and other areas. The amount of storage is determined by local supplies policy and 'just in time' system. Clean disposable bedpans and urinals can be stored in this area.

Clinical Equipment Store

Floor space is needed for a variety of equipment including drip stands, monitoring equipment, ultrasound machines and haemodialysis equipment. Shelf space is needed for smaller items of equipment such as infusion pumps, ventilator accessories, monitoring equipment and suction apparatus. Multiple power outlets are required for the charging of this equipment. (Estimate 40 outlets around the room)This store should be located within easy access of bed areas and adjacent to the equipment service room.

Furniture Store

This holds beds, chairs, and other bulky items of furniture when they are not in use. Special beds and mattresses are sometimes required for patients and when these are removed from the bed space they require suitable storage.

8.1.1 Critical Care Facility – Shared Facilities

Staff Lounge Including Pantry Area

An informal staff lounge area with pantry facilities capable of supporting the local re-generation of staff meals, etc. Also an infrequent meeting/seminar space although configured with a mix of comfortable (lounge-type) seating and formal (dining type) tables and chairs.

8.1.2 Medical/Surgical HDU (Level 2)

Critical Care Bed Area: single room: Isolation (access via gowning lobby)

These rooms @ 26m^2 are the same as that described for Intensive care. Potentially they are flexible in that they may also accommodate Level 3 patients if required.

Critical Care Bed Area: single room (no gowning lobby)

These rooms @ 26m^2 are the same as that described for Intensive care. Potentially they are flexible in that they may also accommodate Level 3 patients if required. One "pod" of these rooms (10 rooms) will be equipped to level 3 standard to support clinical flexibility and support a "blurring of the edges" between level 1 and level 2 facilities.

HDU bed area en-suites @ 4.5m^2

En-suites associated with HDU rooms should be configured in the same manner as is described in the generic ward COS, i.e. Utilising the chamfered shower as described in HBN 00-02 and "folding wall" principle that allows space to be "borrowed" from both the bed and en-suite area as required. All en-suites should be equipped with showers, WC's and WHB's and should all be able to support "dual assistance" being delivered.

Single room/single room bed area

These rooms and/or bed spaces @ 26m^2 are as described for ITU.

Staff Resource Room

As for ICU

Clean Utility room (including blood bank area) x 1

As for ICU

Patient's pantry and regeneration area

This room is similar to a ward pantry, but with the addition of a bay for a regeneration trolley.

Bulk Supplies Store

This is identical to that described within ITU accommodation.

Clinical Equipment Store

This is identical to that described within ITU accommodation.

Furniture Store

This is identical to that described within ITU accommodation.

8.1.3 CCU (Level 2)

Coronary Care bed area: single room @ 20m^2

The CCU single bedrooms, all of which are equipped with en-suites, are specified in accordance with SHPN 28 (Facilities for Cardiac Services). An indicative space allowance of 20m2 is envisaged. A medical supply unit for multi-parameter monitoring, medical gases (oxygen and air), medical vacuum, and electrical outlets must also be provided (per the guidance in SHPN 28); this may take the form of overhead articulated arm(s) or gantry – wall mounted supply is discouraged. Natural daylight is essential and, if present, controllable blackout blinds will be required. Artificial light, apart from examination light, should be indirect with wall dimmer controls. The colour of the walls must not distort the colour rendering of the examination lights so that changes in the patient's colour can be readily identified.

There must be enough space around the bed for use of resuscitation and echocardiography equipment. Each bed area must be large enough to accommodate a C-arm intensifier and screening monitor and have appropriate radiological protection.

All rooms will be lead-lined and configured as Emergency Pacing rooms to support activity as required.

Natural daylight and preferably a view must be provided.

Coronary Care bed area en-suites @ 4.5m^2

All CCU bed rooms should have associated en-suites that should be configured in the same manner as is described in the generic ward COS, i.e. Utilising the chamfered shower as described in HBN 00-02 and "folding wall" principle that allows space to be "borrowed" from both the bed and en-suite area as required. All en-suites should be equipped with showers, WC's and WHB's and should all be able to support "dual assistance" being delivered.

Overall a quiet restful environment is required. Some patients experience enhanced sensory perception as a result of drug therapy therefore it is important that aural and sensory stimulation is kept to a minimum.

All monitoring equipment should be connected to a central monitoring area within CCU to allow remote monitoring. Depending upon the final design of the facility it may be necessary to also include a secondary "monitoring bank" to ensure that this information is visible from all areas of the department – or to seek a more advanced technical solution that will ensure the same.

Natural daylight and preferably a view must be provided.

Clean Utility / Prep Area

This room is similar to that described in ICU clean utility. Additionally drugs cupboard, drugs fridge and lockable medicines cupboards, work surfaces and space for laying up procedure trolleys. Facilities for hand washing must be provided.

Bulk Supplies Store

This is as described within ICU accommodation.

Clinical Equipment Store

This is as described within ICU accommodation.

8.2 Specific Support Requirements

Specific support requirements are identified throughout this document or in the other source documents it references, also see guidance document.

9. OTHER OUTPUT BASED SPECIFICATIONS

Other Output Based Specifications that should be read in conjunction with this one include:

Emergency Complex
Stroke Ward
Renal Ward
Endoscopy
Imaging
Rehabilitation (eg Physio COS)
Generic wards
Operating Theatres
FM

UPDATE ON THE ISOLATION ROOMS FOR THE NEW SOUTH GLASGOW (ADULT) HOSPITAL

The following indicates the isolation rooms required for the New Adult Hospital.

Haemato-Oncology Ward

Sealed ward with hepa filtration positive to the rest of the hospital and all highly filtered air to H13 i.e. 99.95%

(NB - requires a negatively pressurised Treatment Room within the Haemato-Oncology Unit for administration of pentamidine inhalations.)

Respiratory Wards (serving rest of medical)

3 negatively pressurised sealed rooms (without ante rooms) - located together

Renal inpatient wards

2 positively pressurised sealed rooms with negatively pressurised ante-room/s – located within the 20 bedded higher acuity ward

A&E (Emergency Department)

2 negatively pressurised sealed rooms (without ante-rooms) - location as described within the Clinical Output Specification

Critical Care (includes ICU/Surgical and Medical HDU)

10 negatively pressurised sealed rooms with ante-rooms – location as described within the Clinical Output Specification

All in accordance with SHPN4 and SHTM 03-01

SBAR – Isolation rooms critical care - meeting 02/02/17

Situation	NHSGGC Infectious disease physicians at QEUH wrote to the Lead ICD to express concern re the suitability/safety of isolation rooms in critical care for patients with multi-drug resistant Tuberculosis (MDRTB) and Middle east respiratory syndrome coronavirus (MERs-CoV).
Background	There are ten positive pressure ventilated lobbied (PPVL) rooms in Critical care at QEUH. Infectious diseases have access to two of these rooms for the isolation of patients with confirmed or suspected airborne infections. There are no negative pressure rooms in the QEUH. GRI have negative pressure rooms in ward 7 and ICU. In light of the concerns expressed a report into the suitability of the rooms was commissioned from Health Facilities Scotland. (HFS)
Assessment	The two main recommendations from the HFS report were; 1) That the isolation rooms with positive pressure lobbies and ensuites are not used for highly infectious patients 2) The isolation rooms in critical care at QEUH have been modified slightly to the original design criteria e.g. extracts are present in patient rooms . In addition verbal report on ACH/hr in en-suites is 3 , recommendation is at least 10 ACH/hr. This should be rectified and extracts placed in the en-suite. **<u>Risks</u>** The risks associated with PPVL rooms not being deemed suitable for MDRTB or MERs-CoV or having been modified against original design criteria are 1) Cross transmission or outbreaks of serious airborne infections in patients 2) Cross transmission or outbreaks of serious airborne infections in staff members who have not been adequately protected. 3) Failure to adequately protect immunosuppressed patients
Recommendations	1) HSE review of the HFS report and provide opinion re the suitability of these rooms for airborne infections and the risk assessment below in items 2-5.

	2) Pulmonary TB patients – will be nursed in ward 5D. PPE will be applied and the 2 hour rule post AGPs due to air changes of 3/hour 3) Suspected TB patients – risk assessment is that PPVL rooms might offer more protection than a room on 5D . Staff to wear PPE .No immunuosuppressed patients should be nursed in the vicinity. 4) Confirmed MDRTB patients – will be transferred to a negative pressure room in ward 7 at GRI 5) Suspected MERs – case by case risk assessment by on call ID physician. Phoned ahead high probability cases to go to Monklands DGH ID unit.

Dr Teresa Inkster , Lead ICD
Dr Erica Peters, ID Physician
Prof Tom Evans, ID Physician
Dr Mark Cotton, Respiratory Physician
Dr Brian Choo-Kang, Respiratory Physician

From:	Jones, Brian on behalf of Jones, Brian
To:	Peters, Christine
Subject:	RE: Negative pressure rooms in QEUH
Sent:	31/08/2015 15:30:31

I had an idea. If this is official then an email from IPC to let us know would be appropriate.
BJ

From: Peters, Christine
Sent: 31 August 2015 15:15
To: Jones, Brian
Subject: FW: Negative pressure rooms in QEUH

Hi Brian,
Not sure if you already know about this, perhaps all Clinical Microbiology consultants and trainees should be aware of this change in planning for ?Mers ?MTB

Regards,

Christine

Dr Christine Peters
Consultant Microbiologist
Southern General Hospital
GGC
[redacted]

From: Peters, Erica
Sent: 31 August 2015 14:32
To: Inkster, Teresa (NHSmail); Peters, Christine
Subject: FW: Negative pressure rooms in QEUH

FYI

From: Bell, David
Sent: 30 August 2015 11:23
To: Emma Thomson (Emma.Thomson[redacted]; Fox, Ray; MacConnachie, Alisdair; Peters, Erica; Seaton, Andrew; 'Thomas Evans'
Cc: Dundas, Stephanie (MK) ID Unit Consultant; claire.mcgoldrick[redacted] Kennedy, Dr N - Consultant Physician
Subject: Negative pressure rooms in QEUH

There is an issue with the negative pressure HDU isolation rooms in the new hospital

I was phoned by Anne Harkness (management) on Friday evening to say that the 2 negative pressure rooms in HDU are not usable for a highly infectious pathogen at the moment. They are not confident that the rooms are fully protective for staff. The rooms are being urgently

serviced / checked this coming week but at the present time we cannot admit a ?MERS or ? infectious MDR TB into one of these rooms. Until this situation is sorted out we will have to ask Monklands to help – I spoke to Claire on Friday and I am copying in Nick and Stephanie. I hope that you are able to continue to help us this week if we had a case needing isolation.

For a ?VHF patient, we would still use the decontamination room next to A&E in QEUH.

I am away Monday and Tuesday on leave. Anne will get back in touch once she has an update on this situation

Regards

David

Consultant in Infectious Diseases and General Medicine
South Glasgow University Hospital
1345 Govan Road
Glasgow
G51 4TF

Telephone:
[redacted]

27b. email

Julie Rothney

From: Bell, David
Sent: 08 October 2015 14:48
To: Peters, Christine; Harkness, Anne; McFarlane, Cath; Thomson, Iain; Williams, Craig
Cc: Emma Thomson (Emma.Thomson[redacted]; Fox, Ray; MacConnachie, Alisdair; Peters, Erica; Seaton, Andrew; 'Thomas Evans'
Subject: RE: ?MERS patient

Anne, Craig

We really need a response to this. There was a second patient who returned from the Haj in IAU this morning. I am not sure what has happened since, but we need to know now the condition of these rooms. Are they all signed off as usable for a ?MERS patient? Is the door to the mHDU room fixed?

David

From: Bell, David
Sent: 07 October 2015 13:30
To: Peters, Christine; Harkness, Anne; McFarlane, Cath; Thomson, Iain; Williams, Craig
Cc: Emma Thomson (Emma.Thomson[redacted]; Fox, Ray; MacConnachie, Alisdair; Peters, Erica; Seaton, Andrew; 'Thomas Evans'
Subject: RE: ?MERS patient

Speaking for the ID team, this uncertainty and back and forward arguments about these rooms is causing us a huge amount of difficulties. We need to be able to manage highly infectious patients somewhere that is safe for the patient, other patients and safe for the staff. At the moment I have no confidence that this is the case. The issues are:

1. The 2 HDU and 2 ITU negative pressure rooms. Have these rooms passed the infection control team assessment that they are usable for ?MERS? Who has signed this off? Who is keeping an eye on them – this morning we are told the door to the room with the ?MERS patient does not close properly
2. Nursing staff for ?MERS / Resp Infection patients in HDU / ITU. I have already had this argument with Cath and was told that the ID nurses were not required to help with a highly infectious patient in HDU. I think that this is the wrong decision and events last night have borne this out. There was no PPE kit on the ward – no FFP3 masks, no waterproof gowns. We had to bring the kit from 5C. One of the nurses in HDU walked into the room without wearing eye protection. Liz Hughes came to help voluntarily. I spoke to Chris Wright (HDU lead Consultant) and Roisin Parker (lead nurse) and they are both saying they want ID nurses involved in the care of these patient. The ID consultants want to have nurses working with them who are experienced in the care of these patients.

We need to urgently address these issues. The Haj is just finishing and there could be another ?MERS anytime

David

Consultant in Infectious Diseases and General Medicine
South Glasgow University Hospital
1345 Govan Road
Glasgow
G51 4TF

Telephone:
Direct:

[redacted]

From: Peters, Christine
Sent: 07 October 2015 12:29
To: Harkness, Anne; Bell, David; McFarlane, Cath; Thomson, Iain
Subject: RE: ?MERS patient

Sorry to be pedantic – does this include the rooms in HDU?

From: Harkness, Anne
Sent: 07 October 2015 12:24
To: Peters, Christine; Bell, David; McFarlane, Cath; Thomson, Iain
Subject: Re: ?MERS patient

All the rooms in critical care have passed. To arrange access contact needs to be the c care flow coordinator or via iain the lead nurse.

A
****
Sent from a NHSGG&C BlackBerry device
****

From: Peters, Christine
Sent: Wednesday, October 07, 2015 12:04 PM GMT Standard Time
To: Harkness, Anne
Cc: Bell, David
Subject: ?MERS patient

Dear Anne,

I understand that there are certain rooms that have been identified for high grade pathogen isolation that have passed all the commissioning tests.

We currently have a patient with [redacted] and need to identify a further room for a procedure on a previously positive VHF patient.

Please could you let me know which rooms have been identified as safe for isolating such cases by meeting all the requirements for these suites.

Regards,

Christine

Dr Christine Peters
Consultant Microbiologist
Southern General Hospital
GGC
[redacted]

From: Peters, Christine
Sent: 26 June 2015 11:01
To: Walsh, Tom; Inkster Teresa (NHS Greater Glasgow & Clyde); Wright, Pauline
Subject: FW: Meeting re Ventilation

Follow Up Flag: Flag for follow up
Flag Status: Completed

Hi Tom,
I have not had comments back from Ian and assume the notes below to be correct as sent out last night.

I have commenced work on a checklist of specifications and validation requirements for ventilation, however if you already have a document like this it may save some work!

My view is that until we have all the documentation in hand, particularly with regards to validation, it is difficult to make an adequate risk assessment regarding the suitability of the accomodation for BMT patients on 5B. Of note there has to date been no air sampling taken on this unit, and there is also a need for documentation regarding water standards - unless this is already in hand?

Although I am not in today I will be on my mobile [redacted] should you require any clarification,

kind regards,

Christine

From: Peters, Christine
Sent: 25 June 2015 18:31
To: Powrie, Ian
Cc: Inkster, Teresa (NHSmail)
Subject: Meeting re Ventilation

Hi Ian,
Thanks for your time today and for arranging the meeting today with David Hall and the rep from Brookfield (David?).

Please let me know any inaccuracies in my summary below before we circulate more widely
By way of a brief summary;

1. The whole building is mechanically ventilated – ie no natural ventilation
2. We identified that none of the Positive pressure Lobbied rooms have HEPA filtered supply, although there is space for them, if they are put in this would involve changing the supply and extract balance
3. None of the lobbied rooms have been leak tested
4. There is an extract in the bedroom (in roof) as well as in the toilet in the lobbied suites
5. The lobbied suites are 2 on the RENAL 4C, 8 on Critical Care
6. There is a pressure Gauge for visual checks on the lobbied rooms
7. There is an alarm system for AHU failure but this is not linked to nurses station
8. Most of the rooms on 5B Haematology oncology ward (where BMT patients are currently housed)have HEPA supply – except for 2 which we need to have identified. There is no HEPA supply to the corridor, or the prep room on this ward
9. The 5B rooms are not designed to be positive pressure rooms to 10Kpascals differential to corridor, and the air exchange rate we think is 10 ph

10. The commissioning and validation data on ventilation for any part of the hospital including theatres has not had infection control signoff
11. There is no easy to read collection of relevant documents for the specialist ventilated areas including design spec, commissioning and validation data
12. There is no ongoing monitoring system in place for every lobbied room that includes alerts to infection control
13. The light fittings used in the isolation suites in Shahallion are not sealed, allowing open access to the ceiling space which would account for the high particle counts experienced in these rooms
14. The air sampling in the renal ward lobbied rooms were in non HEPA filtered rooms, and air sampling has not been carried out in the Haematology rooms
15. The decontamination room was not designed as an isolation suite for highly infectious patients, and does not have a HEPA extract or negative pressure to 10Kpascals. A redesign for change of use would need to be undergone, including the drainage tank which currently needs specialist emptying

We agreed the following course of action:

1. Brookfield to help put together a folder of documents relating to ventilation to include design spec and validation data easily identified for each room
2. ICDs to discuss and agree on ideal specifications for specialist isolation requirements
3. Gap analysis to be carried out
4. Urgent remediation to the light fittings in Shehallion- but needs to be done paying attention to HAISCRIBE methodology and air testing carried out before being re- occupied
5. David Hall to discuss above issues with Project manager Mr Lowden.

Kind regards,

Christine
Dr Christine Peters
Consultant Microbiologist
Southern General Hospital
GGC
[redacted]

****
NHSGG&C Disclaimer
The information contained within this e-mail and in any attachment is confidential and may be privileged. If you are not the intended recipient, please destroy this message, delete any copies held on your systems and notify the sender immediately; you should not retain, copy or use this e-mail for any purpose, nor disclose all or any part of its content to any other person.
All messages passing through this gateway are checked for viruses, but we strongly recommend that you check for viruses using your own virus scanner as NHS Greater Glasgow & Clyde will not take responsibility for any damage caused as a result of virus infection.
****

From:	Peters, Erica on behalf of Peters, Erica
To:	Peters, Christine
Subject:	FW: High risk airborne infecitons
Sent:	22/07/2015 18:14:43

See below,
A bit of an email trail about the negative pressure rooms in HDU FYI

From: Seaton, Andrew
Sent: 22 July 2015 13:44
To: Peters, Erica
Subject: Re: High risk airborne infecitons

Yes no problem
Andrew

Sent from my BlackBerry 10 smartphone on the EE network.

From: Peters, Erica
Sent: Wednesday, 22 July 2015 11:13
To: Seaton, Andrew
Subject: RE: High risk airborne infecitons

Andrew,
Are you happy for me to send this to Christine Peters? There is ongoing concern about the negative pressure rooms although I understand they are probably ok.
Erica

From: Seaton, Andrew
Sent: 02 February 2015 17:39
To: Fox, Ray; MacConnachie, Alisdair; Peters, Erica; Bell, David; 'Thomas Evans'; 'Emma Thomson'
Subject: FW: High risk airborne infecitons

Dear all,
see below from Craig Williams re the "-ve pressure rooms". I've replied again specifying other airborne viral infection, but the suggestion is the rooms are OK. This makes life much less complicated if correct. His comment about "discussing the last while" in committee isn't quite true (as far as the BICC is concerned). It was mentioned one week ago. I'll follow up.
cheers,
andrew

Dr R A Seaton
Consultant in Infectious Diseases and General Medicine
Lead doctor NHS Greater Glasgow and Clyde Antimicrobial Management Team
Gartnavel General Hospital
1053 Great Western Road
Glasgow
G120YN
[redacted]

[redacted]
Out of office email for non patient-related matters: [redacted]

my actions protect antibiotics
ANTIBIOTIC GUARDIAN
UK SUPPORT FOR EUROPEAN ANTIBIOTIC AWARENESS DAY
join me at antibioticguardian.com

From: Williams, Craig
Sent: 29 January 2015 16:23
To: Seaton, Andrew; Armstrong, Jennifer
Cc: McNamee, Sandra; Kennedy, Iain; Harkness, Anne; Loudon, David
Subject: RE: High risk airborne infecitons

Dear Andrew

This is broadly what we have been discussing at BICC for the last while. The positive pressure ante-room prevents ingress and egress of organisms from the room and can be used for source or protective isolation without the need to flip any switches.

The problem has been that in Scottish Health Planning note 04 there is an Exclusion which states " This Supplement does not describe the specialist facilities required in infectious disease units or on wards where severely immuno-compromised patients are nursed. Guidance for these facilities will follow in a further Supplement to SHPN 04.

However the planning team and HFS have been unable to locate further definitive guidance. This being the case I asked David Louden and his team to specifically cross reference our lobbied rooms with the DH guidance on rooms for MDRTB. At a meeting last week he confirmed that their view is that the lobbied isolation rooms at the NSGH provide equivalent protection, he will confirm this by e mail. As such I have no concerns about the suitability of the rooms for MDRTB etc.

In terms of the Ebola, following your comments at BICC Sandra about the size of the ante-rooms, Iain Kennedy, Sandra and I met with Emma Thompson, who was nominated by the ID physicians to represent them. I explained that we were content that the lobbied side rooms at NSGH are sufficient under the ACDP guidance to manage an Ebola patient prior to transfer to a designated secure unit, but, that they are not sufficient for anything other than short term management, in particular my understanding was that GGC is not planning to act as a referral unit or accept transfers of these patients. If a severely unwell patient requires to be manged in Glasgow the view was that this wouyld constitute a Major Incident and be managed accordingly.

She expressed concern about the transfer of patinets through the NSGH to the designated room and suggested that an isolator may be required to support the tarnsfer. We agreed that she or other ID physicians would walk the route and take upm their concerns through the directorate.

I hope this gives you sufficient detail to address your concrens but if there is anything else please let me know.

Best wishes

Craig

Prof Craig Williams
Consultant Microbiologist Royal Hospital for Sick Children, Glasgow
Lead Infection Control Doctor, NHSGGC
Professor of HAI, UWS

[redacted]
w. www.uws.ac.uk/hai

From: Seaton, Andrew
Sent: 27 January 2015 10:55
To: Williams, Craig; Armstrong, Jennifer
Cc: Dunn, Patricia
Subject: High risk airborne infecitons

Dear Jennifer and Craig,
This is a follow on from BICC. From the discussion yesterday around the 2 dedicated ID beds within HDU I had understood them to be negative pressure. One of my colleagues, Alisdair MacConnachie, has told me that Craig had informed him that the ante room is positive pressure but the patient room is not under negative pressure. Please can this be confirmed? We do need capacity to properly isolate patients with suspected MERS, avian FLU and MDRTB etc. It is essential this is clarified that these rooms are fit for purpose. As discussed yesterday assuming good size of ante room and appropriate channels/ contingency for patient entry/exit etc the VHF facility in these rooms should be appropriate for short term patient management before transfer to Royal Free.
Kind regards,
andrew

Dr R A Seaton
Consultant in Infectious Diseases and General Medicine
Lead doctor NHS Greater Glasgow and Clyde Antimicrobial Management Team
Gartnavel General Hospital
1053 Great Western Road
Glasgow
G120YN
[redacted]
Out of office email for non patient-related matters: [redacted]

my actions protect antibiotics
ANTIBIOTIC
GUARDIAN
UK SUPPORT FOR EUROPEAN ANTIBIOTIC AWARENESS DAY
join me at antibioticguardian.com

H & V
H & V
H & V

Commissioning Services Ltd
EST: 1975

Kilknowe Office,
16 Barrmill Road,
Galston,
Ayrshire, KA48HH.
TEL N°. 01563 821991
FAX N°. 01563 822220
E-Mail: talk2us@handv.co.uk

CONTRACT: NSGH, ADULT & CHILDRENS HOSPITAL – PLANTROOM 122

SYSTEM: 122 – AHU 04 SUPPLY (4TH TO 7TH FLOOR WARDS)

WITNESSING OF TESTING AND BALANCING

	Client Representative / Commissioning Manager	Client
Witnessed By:	Julie Miller	
Representing:	Brookfield Multiplex	
Signature:		
Date:	24/11/14	
Witnessed By:	[redacted]	
Representing:		
Signature:		
Date:		

Remarks:

H & V
H & V
H & V

Commissioning Services Ltd
EST: 1975

Kilknowe Office,
16 Barrmill Road,
Galston,
Ayrshire, KA48HH.
TEL N°. 01563 821991
FAX N°. 01563 822220
E-Mail: talk2us@handv.co.uk

CONTRACT: NSGH, ADULT & CHILDRENS HOSPITAL – PLANTROOM 122

SYSTEM: 122 – AHU 04 SUPPLY (4TH TO 7TH FLOOR)

	AIR SYSTEMS PRE COMMISSIONING SHEET	✓	X	N/A
1.	Check AHU for damage and that all the components are secure	✓		
2.	Check the transit straps have been removed, if applicable	✓		
3.	Check pulleys are secure, tight, aligned and belts are correctly tensioned, if applicable	✓		
4.	Check with the controls engineer that the system is available to run and that plant rotation is correct	✓		
5.	Check all ductwork/air terminals are fitted and that air regulating dampers are open	✓		
6.	Check louvres are fitted and clear from obstructions, if applicable	✓		
7.	Check fire dampers are open, if applicable	✓		
8.	Check the motor overloads are suitable and set			✓
9.	Check VAV or CAV boxes are installed correctly and ready for use.			✓
10.	Check the floor plenums are complete, if applicable			✓
11.	Complete commissioning test sheets.	✓		

COMMENTS

H & V
H & V
H & V

Commissioning Services Ltd
EST: 1975

Kilknowe Office,
16 Barrmill Road,
Galston,
Ayshire, KA48HH.
TEL N°. 01563 821991
FAX N°. 01563 822220
E-Mail: talk2us@handv.co.uk

CONTRACT: NSGH, ADULT & CHILDRENS HOSPITAL – PLANTROOM 122

AHU TEST SHEET

SYSTEM: 122 – AHU 04 SUPPLY (4TH TO 7TH FLOOR)

AHU											
AHU Manufacturer			Barkell		Fan Size			400			
Fan Manufacturer			Comefri		AHU Serial No			OP1 B305 9360			
Fan Type			Centrifugal		AHU Model N°.			TZAF 400 RFF			
			Design			**Test**				**% Design**	
Air Volume (L/S)			2280			2283				100	
External Static Pressure (Pa)			480		Inlet	87	Outlet	645	Total	732	
Fan Rotational Speed (R.P.M)			2002			2000					
Filter Test Data	Pre Filter (Pa)	Inlet	*		Outlet	*			ΔP	*	
	Sec Filter (Pa)	Inlet	*		Outlet	*			ΔP	*	

MOTOR				
Manufacturer	TEC	Output kW	4.0	
Serial N°	1306-1197833	Motor Full Load Current	8.14	Amps
Voltage	400	Motor Running Current	6.2	Amps
	Design	**Test**		
Rotational Speed.	1430	1430		

DRIVE DETAILS			
Motor Pulley/Shaft Size (mm∅)	SPZ 140 28	Motor Pulley Taper Lock Size	1610
Fan Pulley/Shaft Size (mm∅)	SPZ 100 40	Fan Pulley Taper Lock Size	1610
Belt Type/Size	XPZ 950	N°. Of Belts	4
Shaft Centres mm	280	Adjustment	- 25 + 35 mm
Variable Speed Drive	Yes	Set Point	50 Hz

STANDBY PLANT						
Test Air Volume	2283	Inlet Pressure	87	Motor Rotational Speed	1430	Motor Running Current
% Design	100	Outlet Pressure	645	Fan Rotational Speed	2000	6.2 Amps
Variable Speed Drive			Yes	Set Point	50 Hz	

Comments. N/A – Not Applicable

2nd Motor Serial Number – 1306-1197894

*Filter pressure taken from magnehelic gauge.

Static Pressure Sensor = 645Pa

Instrument Used (Ref N°.) HV03/1, HV03/4 & HV03/5

Date: 1/11/14	Engineer: Ross Parker & Chris Shearer	Sheet 3 of 14

H & V
H & V
H & V

Commissioning Services Ltd
EST: 1975

Kilknowe Office,
16 Barrmill Road,
Galston,
Ayshire, KA48HH.
TEL N°. 01563 821991
FAX N°. 01563 822220
E-Mail: talk2us@handv.co.uk

CONTRACT: NSGH, ADULT & CHILDRENS HOSPITAL – PLANTROOM 122

DUCT VOLUME TEST SHEET

SYSTEM: 122 – AHU 04 SUPPLY (4TH TO 7TH FLOOR)

VELOCITY PROFILE (taken facing air flow) **TEST HOLE LOCATION: 8TH FLOOR RISER**

Test Hole Ref		Duct Dia (mm)		Duct Size (mm)		Duct Area		Design Air Volume		Design Air Velocity	
				Width x Height		M2		L/S		M/S	
Main TH				1100	500	0.5500		2280		4.15	
3.70	3.80	3.90	4.20	4.20	3.90						
3.70	4.10	4.50	4.50	4.50	4.50						
3.80	4.30	4.30	4.30	4.00	4.50						

Velocity Sub Totals

11.20	12.20	12.70	13.00	12.70	12.90						

Total Velocity	Number of Readings	Average Velocity	Measured Air Volume	% Design	Static Pressure
M/S		M/S	L/S		Pa
74.7	18	4.15	2283	100	123

Remarks:

Instrument Used: HV03/1

Date: 1/11/14 | Engineer: Ross Parker & Chrs Shearer | Sheet 4 of 14

H & V
H & V
H & V

Commissioning Services Ltd
EST: 1975

Kilknowe Office,
16 Barrmill Road,
Galston,
Ayshire, KA48HH.
TEL N°. 01563 821991
FAX N°. 01563 822220
E-Mail: talk2us@handv.co.uk

CONTRACT: NSGH, ADULT & CHILDRENS HOSPITAL – PLANTROOM 122

DUCT VOLUME TEST SHEET

SYSTEM: 122 – AHU 04 SUPPLY (4TH TO 7TH FLOOR)

VELOCITY PROFILE (taken facing air flow) **TEST HOLE LOCATION: CEILING VOID**

Test Hole Ref		Duct Dia (mm)		Duct Size (mm)		Duct Area		Design Air Volume		Design Air Velocity	
				Width x Height		M2		L/S		M/S	
TH1		200				0.0314		40		1.27	
1.40	1.20										
1.40	1.30										
1.30	1.40										
1.40	1.50										

Velocity Sub Totals

5.50	5.40										

Total Velocity	Number of Readings	Average Velocity	Measured Air Volume	% Design	Static Pressure
M/S		M/S	L/S		Pa
10.9	8	1.36	43.0	108	67

Remarks: Test Hole serves chilled beam ref: CB/W1/L3/1 Level 6

Instrument Used: HV03/1

Date: 1/11/14 | Engineer: Ross Parker & Chris Shearer | Sheet 5 of 14

H & V
H & V
H & V

Commissioning Services Ltd
EST: 1975

Kilknowe Office,
16 Barrmill Road,
Galston,
Ayrshire, KA48HH.
TEL N°. 01563 821991
FAX N°. 01563 822220
E-Mail: talk2us@handv.co.uk

CONTRACT: NSGH, ADULT & CHILDRENS HOSPITAL – PLANTROOM 122

CHILLED BEAM BALANCE SHEET

SYSTEM: 122 – AHU 04 SUPPLY (4TH TO 7TH FLOOR)

LEVEL 4

Chilled Beam Data			Design Data		Test Data			
No.	Size (mm)	Setting	Volume (l/s)	Pressure (Pa)	Initial Pressure (Pa)	Final Pressure (Pa)	Final Volume (l/s)	% Design
CB/W1/L4/1	N/A	N/A	40	47.6	29	50	41	102
CB/W1/L4/2	N/A	N/A	40	47.6	36	48	40	100
CB/W1/L2/1	N/A	N/A	40	47.6	38	49	41	103
CB/W1/L2/2	N/A	N/A	40	47.6	43	50	41	102
CB/W1/L2/3	N/A	N/A	40	47.6	40	50	41	102
CB/W1/L2/4	N/A	N/A	40	47.6	42	53	42	106
CB/W1/L2/5	N/A	N/A	40	47.6	41	49	41	103
CB/W1/L2/6	N/A	N/A	40	47.6	55	48	40	100
CB/W1/L2/7	N/A	N/A	40	47.6	49	55	43	107
CB/W1/L2/8	N/A	N/A	40	47.6	45	48	40	100
CB/W1/L2/9	N/A	N/A	40	47.6	51	49	41	103

REMARKS

INSTRUMENT USED: HV03/1

Date:	1/11/14	Engineer:	R. Parker, C. Shearer & C. Quinn	Sheet 6 of 14

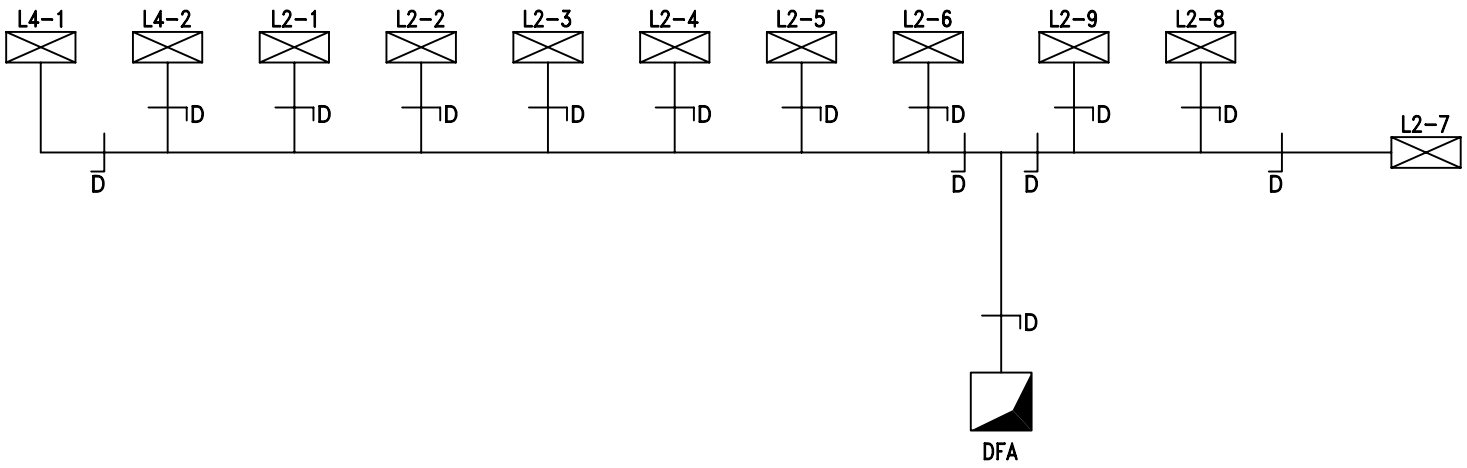

L3-5
ALL CHILLED BEAMS PREFIXED CB/W1/

H&V Commissioning Services Limited
Kilknowe Office
16 Barrmill Road
Galston
East Ayrshire, KA4 8HH
Tel : 01563 821991
Fax: 01563 822220
email: talk2us@handv.co.uk

CONTRACT:
NSGH, ADULT & CHILDREN'S HOSPITAL - PLANTROOM 122

CLIENT:
MERCURY ENGINEERING LTD.

TITLE:
SCHEMATIC LAYOUT OF 122-AHU04 SUPPLY LEVEL 4 - ZONE F

DRAWN: KL/DG
DATE: 18/11/14
DRG No.: 5902/V30
SHEET: 7 OF 14

H & V
H & V
H & V

Commissioning Services Ltd
EST: 1975

Kilknowe Office,
16 Barrmill Road,
Galston,
Ayrshire, KA48HH.
TEL N°. 01563 821991
FAX N°. 01563 822220
E-Mail: talk2us@handv.co.uk

CONTRACT: NSGH, ADULT & CHILDRENS HOSPITAL – PLANTROOM 122

CHILLED BEAM BALANCE SHEET

SYSTEM: 122 – AHU 04 SUPPLY (4TH TO 7TH FLOOR)

LEVEL 5

Chilled Beam Data			Design Data		Test Data			
No.	Size (mm)	Setting	Volume (l/s)	Pressure (Pa)	Initial Pressure (Pa)	Final Pressure (Pa)	Final Volume (l/s)	% Design
CB/W1/L3/1	N/A	N/A	40	47.6	32	51	42	104
CB/W1/L3/2	N/A	N/A	40	47.6	36	49	40	101
CB/W1/L3/3	N/A	N/A	40	47.6	36	49	40	101
CB/W1/L3/4	N/A	N/A	40	47.6	35	50	41	102
CB/W1/L3/5	N/A	N/A	40	47.6	42	49	40	101
CB/W1/L3/6	N/A	N/A	40	47.6	47	50	41	102
CB/W1/L3/7	N/A	N/A	40	47.6	49	50	41	102
CB/W1/L3/8	N/A	N/A	40	47.6	50	51	42	104
CB/W1/L3/9	N/A	N/A	40	47.6	52	49	40	101
CB/W1/L3/10	N/A	N/A	40	47.6	55	51	41	102
CB/W1/L1/1	N/A	N/A	40	39.17	37	39	40	100
CB/W1/L1/2	N/A	N/A	40	39.17	37	39	40	100
CB/W1/L3/11	N/A	N/A	40	47.6	49	48	40	100
CB/W1/L3/12	N/A	N/A	40	47.6	55	49	40	101
CB/W1/L3/13	N/A	N/A	40	47.6	57	49	40	101
CB/W1/L3/14	N/A	N/A	40	47.6	55	49	40	101

REMARKS

INSTRUMENT USED: HV03/1

Date:	1/11/14	Engineer:	R. Parker, C. Shearer & C. Quinn	Sheet 8 of 14

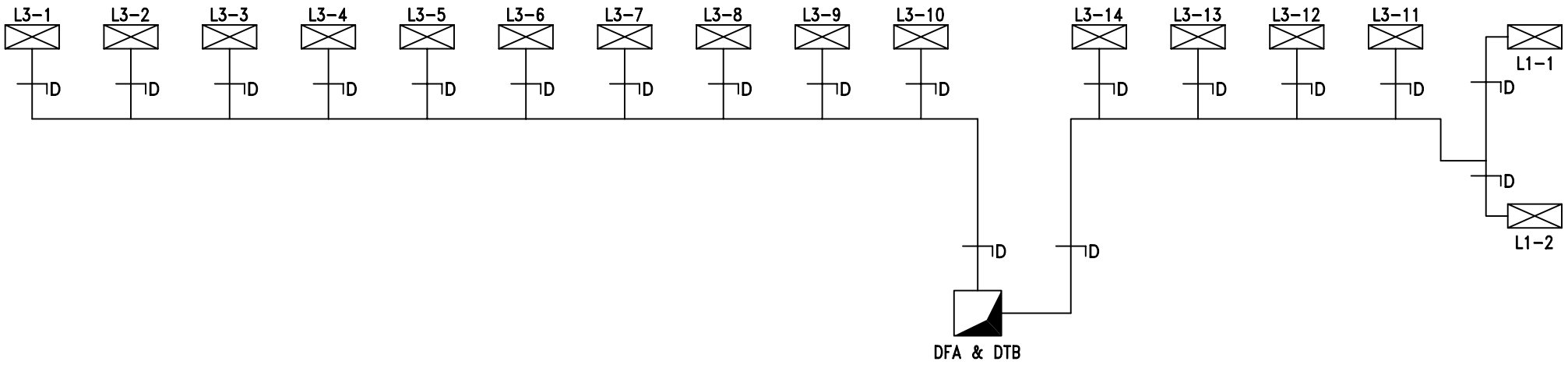

L3-5 ALL CHILLED BEAMS PREFIXED CB/W1/

H&V Commissioning Services Limited
Kilknowe Office
16 Barrmill Road
Galston
East Ayrshire, KA4 8HH
Tel : 01563 821991
Fax: 01563 822220
email: talk2us@handv.co.uk

CONTRACT:
NSGH, ADULT & CHILDREN'S HOSPITAL - PLANTROOM 122

CLIENT:
MERCURY ENGINEERING LTD.

TITLE:
SCHEMATIC LAYOUT OF 122-AHU04 SUPPLY LEVEL 5 - ZONE F

DRAWN: KL/DG

DATE: 18/11/14

DRG No.: 5902/V29

SHEET: 9 OF 14

H & V
H & V
H & V

Commissioning Services Ltd
EST: 1975

Kilknowe Office,
16 Barrmill Road,
Galston,
Ayrshire, KA48HH.
TEL N°. 01563 821991
FAX N°. 01563 822220
E-Mail: talk2us@handv.co.uk

CONTRACT: NSGH, ADULT & CHILDRENS HOSPITAL – PLANTROOM 122

CHILLED BEAM BALANCE SHEET

SYSTEM: 122 – AHU 04 SUPPLY (4TH TO 7TH FLOOR)

LEVEL 6

Chilled Beam Data			Design Data		Test Data			
No.	Size (mm)	Setting	Volume (l/s)	Pressure (Pa)	Initial Pressure (Pa)	Final Pressure (Pa)	Final Volume (l/s)	% Design
CB/W1/L3/1	N/A	N/A	40	47.6	35	52	42	105
CB/W1/L3/2	N/A	N/A	40	47.6	37	51	42	104
CB/W1/L3/4	N/A	N/A	40	47.6	39	50	41	102
CB/W1/L3/5	N/A	N/A	40	47.6	46	54	43	107
CB/W1/L3/6	N/A	N/A	40	47.6	45	52	42	105
CB/W1/L3/7	N/A	N/A	40	47.6	49	52	42	105
CB/W1/L3/8	N/A	N/A	40	47.6	53	50	41	102
CB/W1/L3/9	N/A	N/A	40	47.6	52	53	42	106
CB/W1/L3/3	N/A	N/A	40	47.6	55	51	42	104
CB/W1/L1/1	N/A	N/A	40	39.17	35	41	41	102
CB/W1/L1/2	N/A	N/A	40	39.17	38	43	42	105
CB/W1/L3/10	N/A	N/A	40	47.6	42	52	42	105
CB/W1/L3/11	N/A	N/A	40	47.6	54	51	42	104
CB/W1/L3/12	N/A	N/A	40	47.6	56	52	42	105
CB/W1/L3/13	N/A	N/A	40	47.6	59	53	42	106

REMARKS

INSTRUMENT USED: HV03/1

Date:	1/11/14	Engineer:	R. Parker, C. Shearer & C. Quinn	Sheet 10 of 14

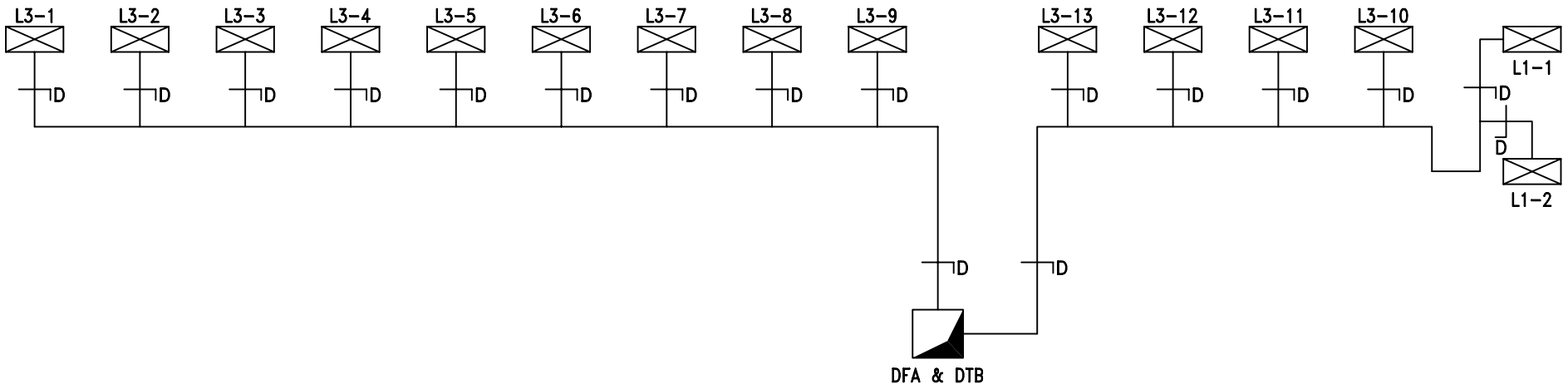

L3-5 ALL CHILLED BEAMS PREFIXED CB/W1/

H&V Commissioning Services Limited Kilknowe Office 16 Barrmill Road Galston East Ayrshire, KA4 8HH Tel : 01563 821991 Fax: 01563 822220 email: talk2us@handv.co.uk	**CONTRACT:** NSGH, ADULT & CHILDREN'S HOSPITAL - PLANTROOM 122 **CLIENT:** MERCURY ENGINEERING LTD.	**TITLE:** SCHEMATIC LAYOUT OF 122-AHU04 SUPPLY LEVEL 6 - ZONE F	**DRAWN:** KL/DG **DATE:** 18/11/14 **DRG No.:** 5902/V28 **SHEET:** 11 OF 14

H & V
H & V
H & V

Commissioning Services Ltd
EST: 1975

Kilknowe Office,
16 Barrmill Road,
Galston,
Ayrshire, KA48HH.
TEL N°. 01563 821991
FAX N°. 01563 822220
E-Mail: talk2us@handv.co.uk

CONTRACT: NSGH, ADULT & CHILDRENS HOSPITAL – PLANTROOM 122

CHILLED BEAM BALANCE SHEET

SYSTEM: 122 – AHU 04 SUPPLY (4TH TO 7TH FLOOR)

LEVEL 7

Chilled Beam Data			Design Data		Test Data			
No.	Size (mm)	Setting	Volume (l/s)	Pressure (Pa)	Initial Pressure (Pa)	Final Pressure (Pa)	Final Volume (l/s)	% Design
CB/W1/L3/1	N/A	N/A	40	47.6	50	51	42	104
CB/W1/L3/2	N/A	N/A	40	47.6	50	52	42	105
CB/W1/L3/3	N/A	N/A	40	47.6	51	53	42	106
CB/W1/L3/4	N/A	N/A	40	47.6	51	52	42	105
CB/W1/L3/5	N/A	N/A	40	47.6	51	52	42	105
CB/W1/L3/6	N/A	N/A	40	47.6	51	52	42	105
CB/W1/L3/7	N/A	N/A	40	47.6	51	52	42	105
CB/W1/L3/8	N/A	N/A	40	47.6	52	53	42	106
CB/W1/L3/9	N/A	N/A	40	47.6	50	52	42	105
CB/W1/L3/10	N/A	N/A	40	47.6	51	51	42	104
CB/W1/L1/1	N/A	N/A	40	39.17	39	40	40	101
CB/W1/L1/2	N/A	N/A	40	39.17	37	42	42	104
CB/W1/L3/11	N/A	N/A	40	47.6	49	50	41	102
CB/W1/L3/12	N/A	N/A	40	47.6	48	51	42	104
CB/W1/L3/13	N/A	N/A	40	47.6	50	53	42	106
CB/W1/L3/14	N/A	N/A	40	47.6	51	51	42	104

REMARKS

INSTRUMENT USED: HV03/1

Date:	1/11/14	Engineer:	r. Parker, C. Shearer & C. Quinn	Sheet 12 of 14

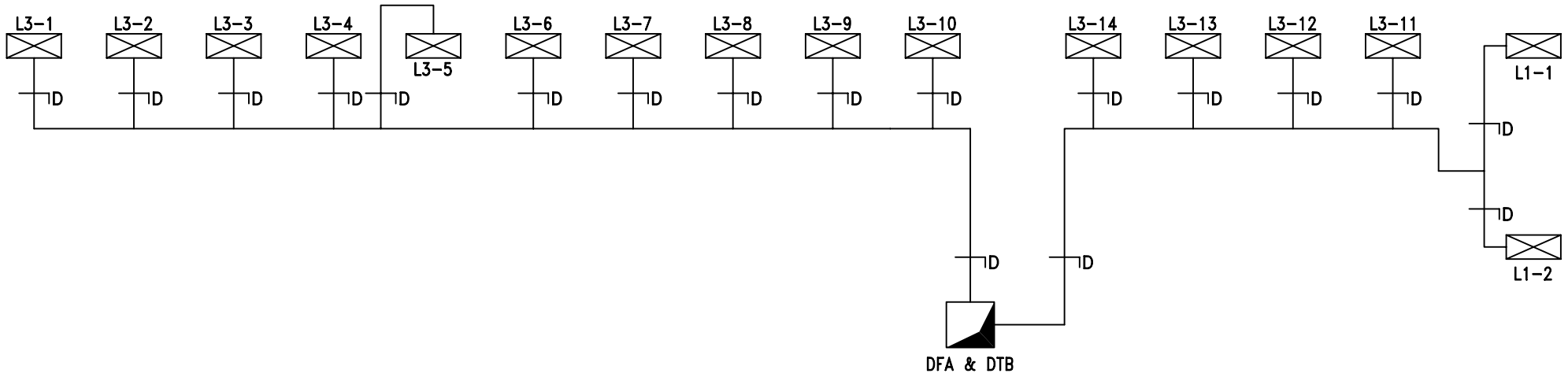

L3-5 ALL CHILLED BEAMS PREFIXED CB/W1/

H&V Commissioning Services Limited
Kilknowe Office
16 Barrmill Road
Galston
East Ayrshire, KA4 8HH
Tel : 01563 821991
Fax: 01563 822220
email: talk2us@handv.co.uk

CONTRACT:
NSGH, ADULT & CHILDREN'S HOSPITAL - PLANTROOM 122

CLIENT:
MERCURY ENGINEERING LTD.

TITLE:
SCHEMATIC LAYOUT OF 122-AHU04 SUPPLY LEVEL 7 - ZONE F

DRAWN: KL/DG

DATE: 18/11/14

DRG No.: 5902/V27

SHEET: 13 OF 14

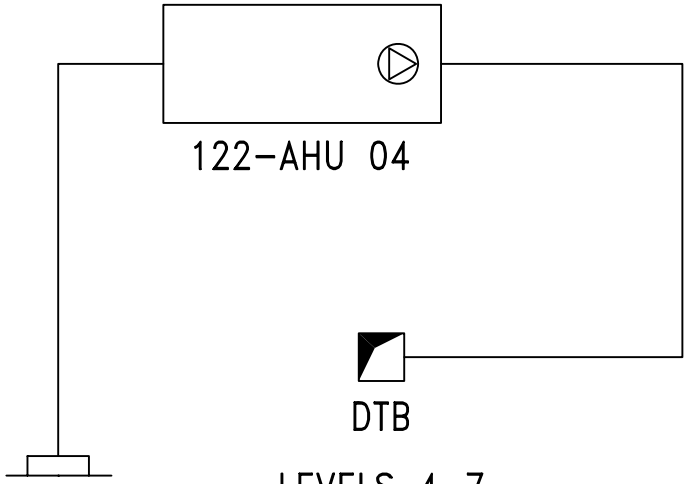

PLANTROOM 122 LEVEL 12

SHEET: 14 OF 14

H&V Commissioning Services Limited
Kilknowe Office
16 Barrmill Road
Galston
East Ayrshire, KA4 8HH
Tel : 01563 821991
Fax: 01563 822220 email: talk2us@handv.co.uk

A49618320

CONTRACT:
NSGH, ADULT & CHILDREN'S HOSPITAL - PLANTROOM 122

CLIENT:
MERCURY ENGINEERING UK

TITLE:
SCHEMATIC LAYOUT OF

122-AHU 04 SUPPLY

DRAWN: LH/GD

DATE: 01/11/14

DRG. No.: 5902/V26

H & V
H & V
H & V

Commissioning Services Ltd
EST: 1975

Kilknowe Office,
16 Barrmill Road,
Galston,
Ayrshire, KA48HH.
TEL N°. 01563 821991
FAX N°. 01563 822220
E-Mail: talk2us@handv.co.uk

CONTRACT: NSGH, ADULT & CHILDRENS HOSPITAL – PLANTROOM 122

SYSTEM: 122 – AHU 04 DIRTY EXTRACT (4TH TO 7TH FLOOR WARDS)

WITNESSING OF TESTING AND BALANCING

	Client Representative / Commissioning Manager	Client
Witnessed By:	Julie Miller	
Representing:	Brookfield Multiplex	
Signature:		
Date:	24/11/14	
Witnessed By:	[redacted]	
Representing:		
Signature:		
Date:		

Remarks:

H & V
H & V
H & V

Commissioning Services Ltd
EST: 1975

Kilknowe Office,
16 Barrmill Road,
Galston,
Ayrshire, KA48HH.
TEL N°. 01563 821991
FAX N°. 01563 822220
E-Mail: talk2us@handv.co.uk

CONTRACT: NSGH, ADULT & CHILDRENS HOSPITAL – PLANTROOM 122

SYSTEM: 122 – AHU 04 DIRTY EXTRACT (4TH TO 7TH FLOOR)

	AIR SYSTEMS PRE COMMISSIONING SHEET	✓	X	N/A
1.	Check AHU for damage and that all the components are secure	✓		
2.	Check the transit straps have been removed, if applicable	✓		
3.	Check pulleys are secure, tight, aligned and belts are correctly tensioned, if applicable	✓		
4.	Check with the controls engineer that the system is available to run and that plant rotation is correct	✓		
5.	Check all ductwork/air terminals are fitted and that air regulating dampers are open	✓		
6.	Check louvres are fitted and clear from obstructions, if applicable	✓		
7.	Check fire dampers are open, if applicable	✓		
8.	Check the motor overloads are suitable and set			✓
9.	Check VAV or CAV boxes are installed correctly and ready for use.			✓
10.	Check the floor plenums are complete, if applicable			✓
11.	Complete commissioning test sheets.	✓		

COMMENTS

H & V
H & V
H & V

Commissioning Services Ltd
EST: 1975

Kilknowe Office,
16 Barrmill Road,
Galston,
Ayshire, KA48HH.
TEL N°. 01563 821991
FAX N°. 01563 822220
E-Mail: talk2us@handv.co.uk

CONTRACT: NSGH, ADULT & CHILDRENS HOSPITAL – PLANTROOM 122

AHU TEST SHEET

SYSTEM: 122 – AHU 04 DIRTY EXTRACT (4TH TO 7TH FLOOR)

AHU									
AHU Manufacturer		Barkell		Fan Size		400			
Fan Manufacturer		Comefri		AHU Serial No		OP1 B305 9360			
Fan Type		Centrifugal		AHU Model N°.		TZAF 400 RFF			
		Design		**Test**				**% Design**	
Air Volume (L/S)		2424		2630				108	
External Static Pressure (Pa)		540		Inlet	324	Outlet	53	Total	377
Fan Rotational Speed (R.P.M)		1887		1887					
Filter Test Data	Pre Filter (Pa)	Inlet	*	Outlet	*			ΔP	*15
	Sec Filter (Pa)	Inlet	N/A	Outlet	N/A			ΔP	N/A

MOTOR			
Manufacturer	TEC	Output kW	4.0
Serial N°	1306-1197899	Motor Full Load Current	8.14 Amps
Voltage	400	Motor Running Current	5.7 Amps
	Design	**Test**	
Rotational Speed.	1430	1429	

DRIVE DETAILS			
Motor Pulley/Shaft Size (mm∅)	SPZ 132 28	Motor Pulley Taper Lock Size	1610
Fan Pulley/Shaft Size (mm∅)	SPZ 100 40	Fan Pulley Taper Lock Size	1610
Belt Type/Size	XPZ 937	N°. Of Belts	4
Shaft Centres mm	280	Adjustment	- 25 + 35 mm
Variable Speed Drive	Yes	Set Point	50 Hz

STANDBY PLANT							
Test Air Volume	2630	Inlet Pressure	324	Motor Rotational Speed	1429	Motor Running Current	
% Design	108	Outlet Pressure	53	Fan Rotational Speed	1887	5.7	Amps
Variable Speed Drive			Yes	Set Point	50 Hz		

Comments. N/A – Not Applicable

2nd Motor Serial Number – 1306-1197830

*Filter pressure taken from magnehelic gauge.

Instrument Used (Ref N°.) HV03/1, HV03/4 & HV03/5

Date: 6/11/14	Engineer: Ross Parker & Daniel Gilliland	Sheet 3 of 14

H & V
H & V
H & V

Commissioning Services Ltd
EST: 1975

Kilknowe Office,
16 Barrmill Road,
Galston,
Ayshire, KA48HH.
TEL N°. 01563 821991
FAX N°. 01563 822220
E-Mail: talk2us@handv.co.uk

CONTRACT: NSGH, ADULT & CHILDRENS HOSPITAL – PLANTROOM 122

DUCT VOLUME TEST SHEET

SYSTEM: 122 – AHU 04 DIRTY EXTRACT (4TH TO 7TH FLOOR)

VELOCITY PROFILE (taken facing air flow) **TEST HOLE LOCATION: LEVEL 8 RISER**

Test Hole Ref		Duct Dia (mm)		Duct Size (mm)		Duct Area		Design Air Volume		Design Air Velocity	
				Width x Height		M2		L/S		M/S	
Main TH				1200	500	0.6000		2424		4.04	
4.30	4.70	4.90	4.50	4.50	5.00						
4.40	4.60	4.50	4.50	3.90	3.90						
4.30	4.30	4.30	4.20	4.10	4.00						

Velocity Sub Totals

13.00	13.60	13.70	13.20	12.50	12.90						

Total Velocity	Number of Readings	Average Velocity	Measured Air Volume	% Design	Static Pressure
M/S		M/S	L/S		Pa
78.9	18	4.38	2630	108	292

Remarks:

Instrument Used: HV03/1

Date: 6/11/14 | Engineer: Ross Parker & Daniel Gilliland | Sheet 4 of 14

H & V
H & V
H & V

Commissioning Services Ltd
EST: 1975

Kilknowe Office,
16 Barrmill Road,
Galston,
Ayshire, KA48HH.
TEL N°. 01563 821991
FAX N°. 01563 822220
E-Mail: talk2us@handv.co.uk

CONTRACT: NSGH, ADULT & CHILDRENS HOSPITAL – PLANTROOM 122

DUCT VOLUME TEST SHEET

SYSTEM: 122 – AHU 04 DIRTY EXTRACT (4TH TO 7TH FLOOR)

VELOCITY PROFILE (taken facing air flow) **TEST HOLE LOCATION: CEILING VOID**

Test Hole Ref		Duct Dia (mm)		Duct Size (mm)		Duct Area		Design Air Volume		Design Air Velocity	
				Width x Height		M2		L/S		M/S	
TH1		160				0.0201		45		2.24	
2.40	2.50										
2.30	2.40										
2.40	2.40										
2.50	2.40										
Velocity Sub Totals											
9.60	9.70										

Total Velocity	Number of Readings	Average Velocity	Measured Air Volume	% Design	Static Pressure
M/S		M/S	L/S		Pa
19.3	8	2.41	48.0	107	17

Remarks: Test Hole serves Grille 4-504-TG012. Test Volume 48 l/s ÷ Balometer Volume 40 l/s = 1.2 Factor

Instrument Used: HV03/1

Date: 6/11/14 | Engineer: Ross Parker & Daniel Gilliland | Sheet 5 of 14

H & V
H & V
H & V

Commissioning Services Ltd
EST: 1975

Kilknowe Office,
16 Barrmill Road,
Galston,
Ayrshire, KA48HH.
TEL N°. 01563 821991
FAX N°. 01563 822220
E-Mail: talk2us@handv.co.uk

CONTRACT: NSGH, ADULT & CHILDRENS HOSPITAL – PLANTROOM 122

GRILLE TEST SHEET

SYSTEM: 122 – AHU 04 DIRTY EXTRACT (4TH TO 7TH FLOOR)

LEVEL 4

Design Data		Initial Test Data		Final Test & Regulation Data		
Terminal or Ref No	Design Air Volume l/s	Balometer Initial Air Volume l/s	Balometer Final Air Volume l/s	Balometer Factor	Balometer Final Air Volume l/s	% Design
**TG013	58	81	51	1.2	61.20	106
**TG014	45	33	40	1.2	48.00	107
**TG012	45	47	40	1.2	48.00	107
**TG011	45	52	40	1.2	48.00	107
*TG001	60	88	53	1.2	63.60	106
*TG010	65	87	56	1.2	67.20	103
**TG007	45	54	40	1.2	48.00	107

Remarks: *All Grilles prefixed with 503. **All Grilles prefixed with 504.

Instrument Used: HV01/15

Date: 6/11/14	Engineer: Ross Parker & Daniel Gilliland	Sheet 6 of 14

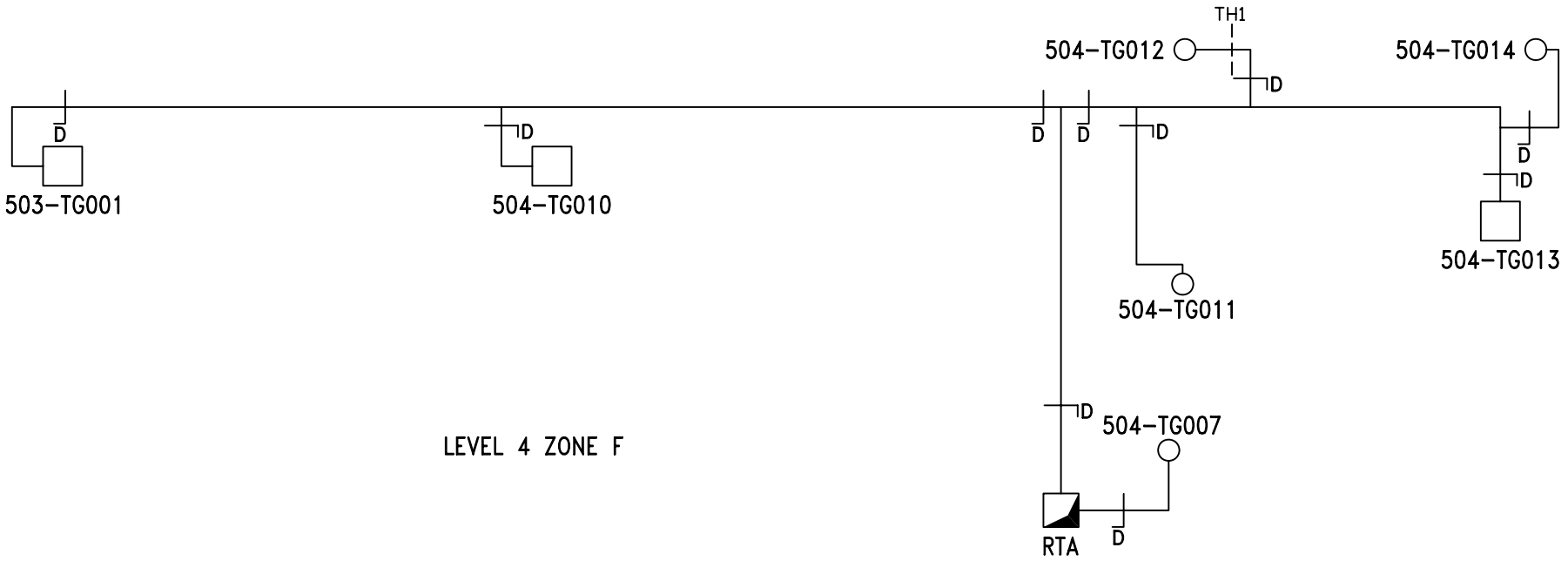

SHEET: 7 OF 14

H&V Commissioning Services Limited
Kilknowe Office
16 Barrmill Road
Galston
East Ayrshire, KA4 8HH
Tel : 01563 821991
A49618320
Fax: 01563 822220 email: talk2us@handv.co.uk

CONTRACT: NSGH, ADULT & CHILDREN'S HOSPITAL - PLANTROOM 122	**TITLE:** SCHEMATIC LAYOUT OF	**DRAWN:** LH/DG
CLIENT: MERCURY ENGINEERING UK	122-AHU 04 DIRTY EXTRACT LEVEL 4	**DATE:** 06/11/14
		DRG. No.: 5902/V25

H & V
H & V
H & V

Commissioning Services Ltd
EST: 1975

Kilknowe Office,
16 Barrmill Road,
Galston,
Ayrshire, KA48HH.
TEL N°. 01563 821991
FAX N°. 01563 822220
E-Mail: talk2us@handv.co.uk

CONTRACT: NSGH, ADULT & CHILDRENS HOSPITAL – PLANTROOM 122

GRILLE TEST SHEET

SYSTEM: 122 – AHU 04 DIRTY EXTRACT (4TH TO 7TH FLOOR)

LEVEL 5

Design Data		Initial Test Data		Final Test & Regulation Data		
Terminal or Ref No	Design Air Volume l/s	Balometer Initial Air Volume l/s	Balometer Final Air Volume l/s	Balometer Factor	Balometer Final Air Volume l/s	% Design
*TG002	45	24	39	1.2	46.80	104
*TG001	45	28	38	1.2	45.60	101
*TG003	45	27	38	1.2	45.60	101
*TG004	45	0	39	1.2	46.80	104
*TG005	45	34	40	1.2	48.00	107
*TG006	45	36	38	1.2	45.60	101
*TG007	45	36	40	1.2	48.00	107
**TG001	45	40	40	1.2	48.00	107
**TG002	45	42	40	1.2	48.00	107
**TG003	45	44	40	1.2	48.00	107
**TG005	45	46	40	1.2	48.00	107
**TG004	45	49	40	1.2	48.00	107
**TG006	45	72	39	1.2	46.80	104
**TG007	45	64	40	1.2	48.00	107
**TG008	22	30	19	1.2	22.80	104

Remarks *All Grilles prefixed with 503. **All Grilles prefixed with 504.

Instrument Used: HV01/15

Date: 6/11/14	Engineer: Ross Parker & Daniel Gilliland	Sheet 8 of 14

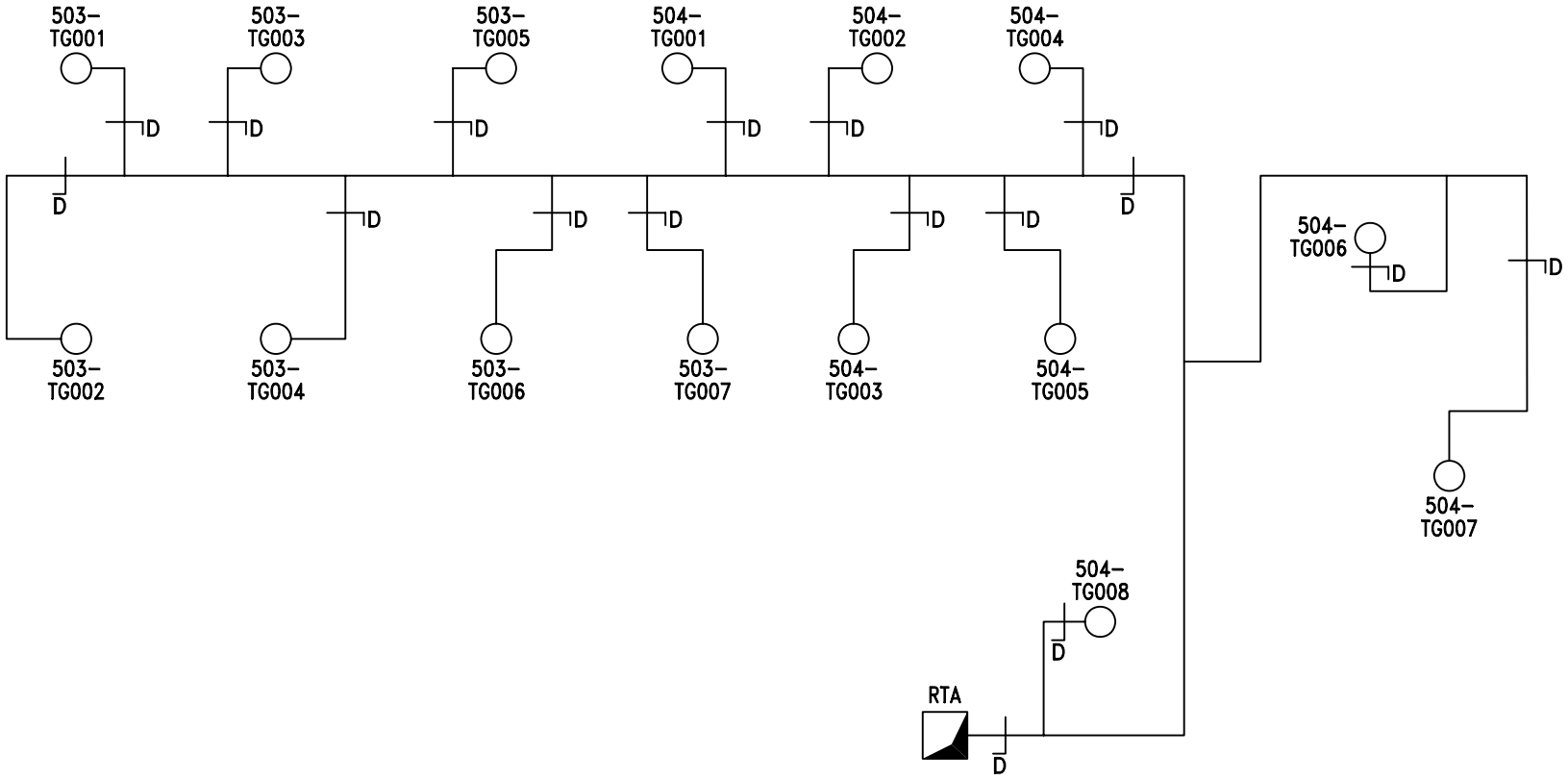

H&V Commissioning Services Limited
Kilknowe Office
16 Barrmill Road
Galston
East Ayrshire, KA4 8HH
Tel : 01563 821991
Fax: 01563 822220
email: talk2us@handv.co.uk

CONTRACT:
NSGH, ADULT & CHILDREN'S HOSPITAL - PLANTROOM 122

CLIENT:
MERCURY ENGINEERING LTD.

TITLE:
SCHEMATIC LAYOUT OF 122-AHU04 DIRTY EXTRACT LEVEL 5 - ZONE F

DRAWN: KL/DG
DATE: 18/11/14
DRG No.: 5902/V24
SHEET: 9 OF 14

H & V
H & V
H & V

Commissioning Services Ltd
EST: 1975

Kilknowe Office,
16 Barrmill Road,
Galston,
Ayrshire, KA48HH.
TEL N°. 01563 821991
FAX N°. 01563 822220
E-Mail: talk2us@handv.co.uk

CONTRACT: NSGH, ADULT & CHILDRENS HOSPITAL – PLANTROOM 122

GRILLE TEST SHEET

SYSTEM: 122 – AHU 04 DIRTY EXTRACT (4TH TO 7TH FLOOR)

LEVEL 6

Design Data		Initial Test Data		Final Test & Regulation Data		
Terminal or Ref No	Design Air Volume l/s	Balometer Initial Air Volume l/s	Balometer Final Air Volume l/s	Balometer Factor	Balometer Final Air Volume l/s	% Design
*TE001	150	145	130	1.2	156.00	104
*TE002	45	12	38	1.2	45.60	101
*TE003	45	32	38	1.2	45.60	101
*TE004	45	34	38	1.2	45.60	101
*TE005	45	35	39	1.2	46.80	104
*TE006	45	36	39	1.2	46.80	104
*TE007	45	38	38	1.2	45.60	101
**TG001	45	39	38	1.2	45.60	101
**TG002	45	40	38	1.2	45.60	101
**TG003	45	42	39	1.2	46.80	104
**TG005	45	44	39	1.2	46.80	104
**TG004	45	46	38	1.2	45.60	101
**TG007	45	50	39	1.2	46.80	104
**TG006	45	68	39	1.2	46.80	104
**TG008	22	47	19	1.2	22.80	104

Remarks *All Grilles prefixed with 503. **All Grilles prefixed with 504.

Instrument Used: HV01/15

Date: 6/11/14	Engineer: Ross Parker & Daniel Gilliland	Sheet 10 of 14

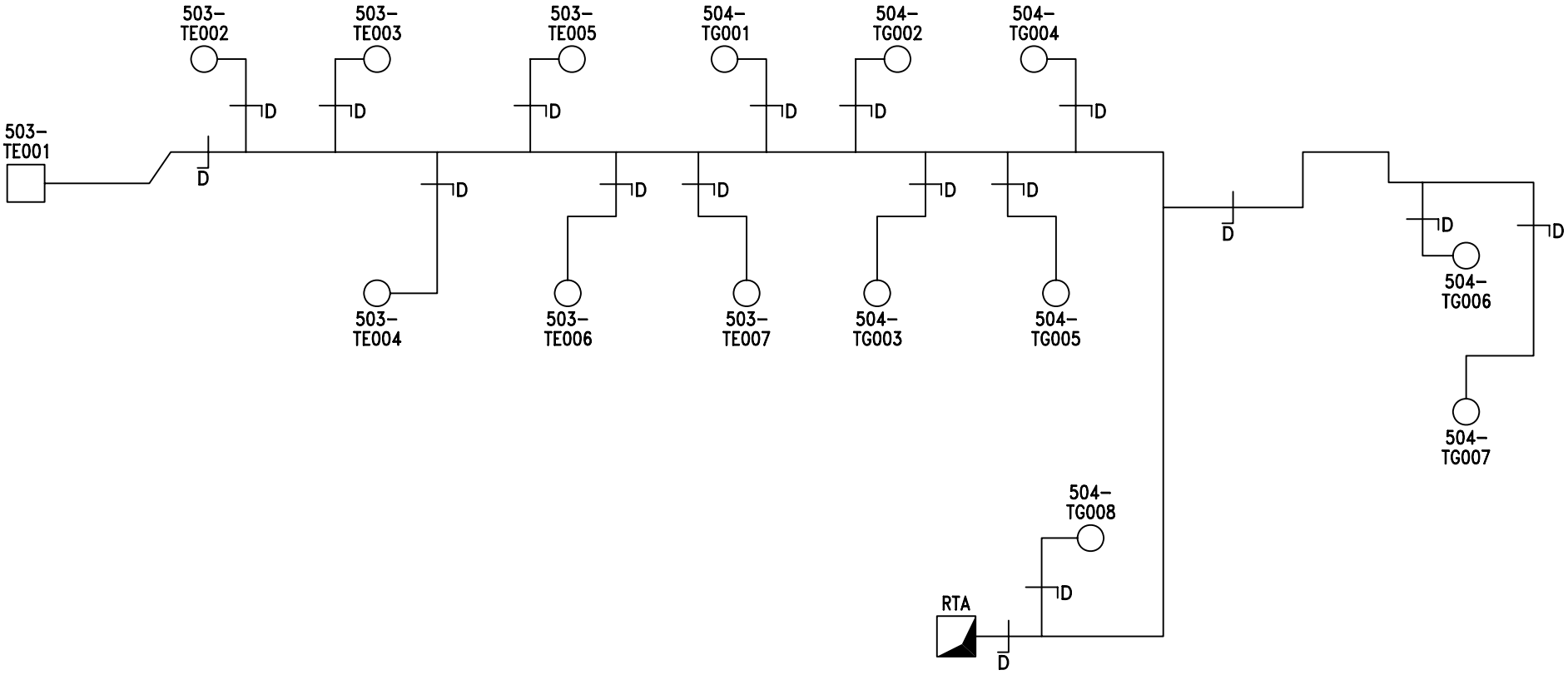

H&V Commissioning Services Limited **Kilknowe Office** **16 Barrmill Road** **Galston** **East Ayrshire, KA4 8HH** **Tel : 01563 821991** **Fax: 01563 822220** **email: talk2us@handv.co.uk**	**CONTRACT:** **NSGH, ADULT & CHILDREN'S HOSPITAL - PLANTROOM 122** **CLIENT:** **MERCURY ENGINEERING LTD.**	**TITLE:** **SCHEMATIC LAYOUT OF 122-AHU04 DIRTY EXTRACT LEVEL 6 - ZONE F**	**DRAWN:** KL/DG **DATE:** 18/11/14 **DRG No.:** 5902/V23 **SHEET:** 11 OF 14

04/12/2020

H & V
H & V
H & V

Commissioning Services Ltd
EST: 1975

Kilknowe Office,
16 Barrmill Road,
Galston,
Ayrshire, KA48HH.
TEL N°. 01563 821991
FAX N°. 01563 822220
E-Mail: talk2us@handv.co.uk

CONTRACT: NSGH, ADULT & CHILDRENS HOSPITAL – PLANTROOM 122

GRILLE TEST SHEET

SYSTEM: 122 – AHU 04 DIRTY EXTRACT (4TH TO 7TH FLOOR)

LEVEL 7

Design Data		Initial Test Data		Final Test & Regulation Data		
Terminal or Ref No	Design Air Volume l/s	Balometer Initial Air Volume l/s	Balometer Final Air Volume l/s	Balometer Factor	Balometer Final Air Volume l/s	% Design
*TG002	45	35	39	1.2	46.80	104
*TG001	45	25	38	1.2	45.60	101
*TG003	45	42	38	1.2	45.60	101
*TG004	45	40	40	1.2	48.00	107
*TG005	45	37	39	1.2	46.80	104
*TG006	45	41	38	1.2	45.60	101
*TG007	45	40	39	1.2	46.80	104
**TG001	45	39	40	1.2	48.00	107
**TG002	45	46	40	1.2	48.00	107
**TG003	45	63	38	1.2	45.60	101
**TG005	45	64	38	1.2	45.60	101
**TG004	45	66	38	1.2	45.60	101
**TG006	45	64	38	1.2	45.60	101
**TG007	45	57	38	1.2	45.60	101
**TG008	22	24	19	1.2	22.80	104

Remarks *All Grilles prefixed with 503. **All Grilles prefixed with 504.

Instrument Used: HV01/15

Date: 6/11/14	Engineer: Ross Parker & Daniel Gilliland	Sheet 12 of 14

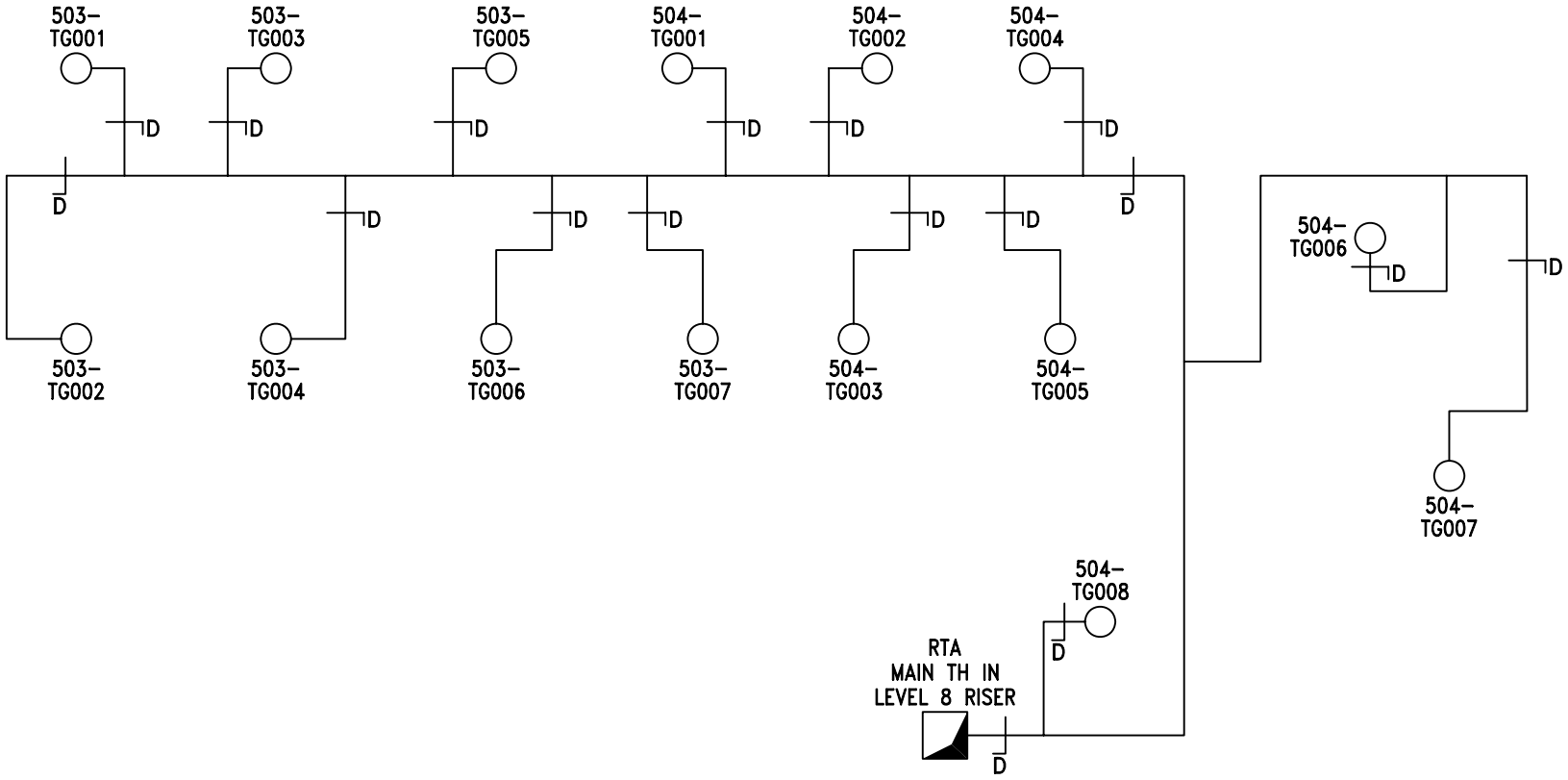

H&V Commissioning Services Limited
Kilknowe Office
16 Barrmill Road
Galston
East Ayrshire, KA4 8HH
Tel : 01563 821991
Fax: 01563 822220
email: talk2us@handv.co.uk

CONTRACT:
NSGH, ADULT & CHILDREN'S HOSPITAL - PLANTROOM 122

CLIENT:
MERCURY ENGINEERING LTD.

TITLE:
SCHEMATIC LAYOUT OF 122-AHU04 DIRTY EXTRACT LEVEL 7 - ZONE F

DRAWN: KL/DG
DATE: 18/11/14
DRG No.: 5902/V21
SHEET: 13 OF 14

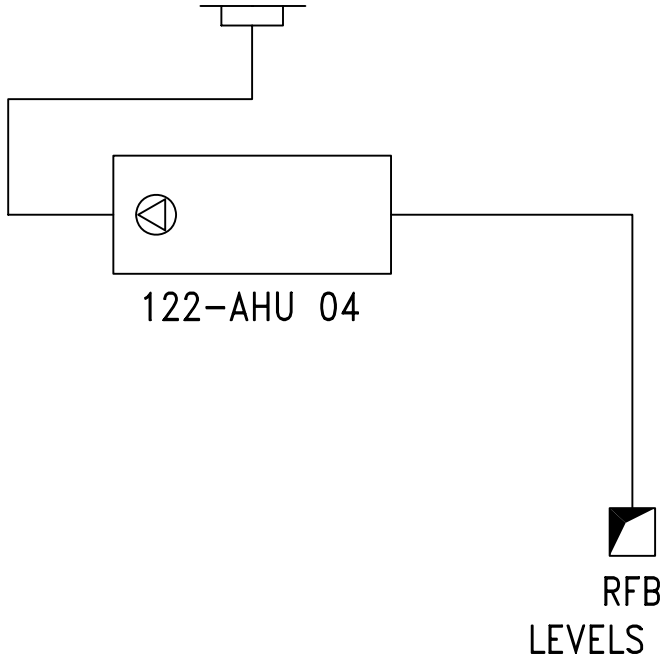

PLANTROOM 122 LEVEL 12

SHEET: 14 OF 14

H&V Commissioning Services Limited
Kilknowe Office
16 Barrmill Road
Galston
East Ayrshire, KA4 8HH
Tel : 01563 821991
A49618320
Fax: 01563 822220 email: talk2us@handv.co.uk

CONTRACT:
NSGH, ADULT & CHILDREN'S HOSPITAL - PLANTROOM 122

CLIENT:
MERCURY ENGINEERING UK

TITLE:
SCHEMATIC LAYOUT OF

122-AHU 04 EXTRACT

DRAWN: LH/RP

DATE: 06/11/14

DRG. No.: 5902/V22

H & V
H & V
H & V

Commissioning Services Ltd
EST: 1975

Kilknowe Office,
16 Barrmill Road,
Galston,
Ayrshire, KA48HH.
TEL N°. 01563 821991
FAX N°. 01563 822220
E-Mail: talk2us@handv.co.uk

CONTRACT: NSGH, ADULT & CHILDRENS HOSPITAL – PLANTROOM 122

SYSTEM: 122 - AHU 05 SUPPLY (4TH TO 7TH FLOOR WARDS)

WITNESSING OF TESTING AND BALANCING

	Client Representative / Commissioning Manager	Client
Witnessed By:	Julie Miller	
Representing:	Brookfield Multiplex	
Signature:	[redacted]	
Date:	18/12/14	
Witnessed By:		
Representing:		
Signature:		
Date:		

Remarks:

H & V
H & V
H & V

Commissioning Services Ltd
EST: 1975

Kilknowe Office,
16 Barrmill Road,
Galston,
Ayrshire, KA48HH.
TEL N°. 01563 821991
FAX N°. 01563 822220
E-Mail: talk2us@handv.co.uk

CONTRACT: NSGH, ADULT & CHILDRENS HOSPITAL – PLANTROOM 122

SYSTEM: 122 – AHU 05 SUPPLY (4TH TO 7TH FLOOR WARDS)

	AIR SYSTEMS PRE COMMISSIONING SHEET	✓	X	N/A
1.	Check AHU for damage and that all the components are secure	✓		
2.	Check the transit straps have been removed, if applicable	✓		
3.	Check pulleys are secure, tight, aligned and belts are correctly tensioned, if applicable	✓		
4.	Check with the controls engineer that the system is available to run and that plant rotation is correct	✓		
5.	Check all ductwork/air terminals are fitted and that air regulating dampers are open	✓		
6.	Check louvres are fitted and clear from obstructions, if applicable	✓		
7.	Check fire dampers are open, if applicable	✓		
8.	Check the motor overloads are suitable and set			✓
9.	Check VAV or CAV boxes are installed correctly and ready for use.			✓
10.	Check the floor plenums are complete, if applicable			✓
11.	Complete commissioning test sheets.	✓		

COMMENTS

H & V
H & V
H & V

Commissioning Services Ltd
EST: 1975

Kilknowe Office,
16 Barrmill Road,
Galston,
Ayshire, KA48HH.
TEL N°. 01563 821991
FAX N°. 01563 822220
E-Mail: talk2us@handv.co.uk

CONTRACT: NSGH, ADULT & CHILDRENS HOSPITAL – PLANTROOM 122

AHU TEST SHEET

SYSTEM: 122 – AHU 05 SUPPLY (4TH TO 7TH FLOOR WARDS)

AHU											
AHU Manufacturer			Barkell		Fan Size			400			
Fan Manufacturer			Comefri		AHU Serial No			OP1 B305 3348			
Fan Type			Centrifugal		AHU Model N°.			THLZ 400R			
			Design			**Test**				**% Design**	
Air Volume (L/S)			2120			2246				106	
External Static Pressure (Pa)			530		Inlet	89	Outlet	318	Total	407	
Fan Rotational Speed (R.P.M)			2145			1976					
Filter Test Data	Pre Filter (Pa)	Inlet	N/A	Outlet	N/A			ΔP	*45		
	Sec Filter (Pa)	Inlet	N/A	Outlet	N/A			ΔP	*65		

MOTOR					
Manufacturer	TEC		Output kW	4.0	
Serial N°	1306-1197896		Motor Full Load Current	8.14	Amps
Voltage	400		Motor Running Current	6.0	Amps
	Design		**Test**		
Rotational Speed.	1430		1320		

DRIVE DETAILS					
Motor Pulley/Shaft Size (mm∅)	SPZ 150	28	Motor Pulley Taper Lock Size	2012	
Fan Pulley/Shaft Size (mm∅)	SPZ 100	35	Fan Pulley Taper Lock Size	1610	
Belt Type/Size	XPZ	975	N°. Of Belts	4	
Shaft Centres mm	290		Adjustment	- 30	+ 25 mm
Variable Speed Drive	Yes		Set Point	46Hz	

STANDBY PLANT							
Test Air Volume	2246	Inlet Pressure	89	Motor Rotational Speed	1320	Motor Running Current	
% Design	106	Outlet Pressure	318	Fan Rotational Speed	1976	6.0	Amps
Variable Speed Drive			Yes	Set Point	46Hz		

Comments. N/A – Not Applicable

2nd Motor Serial Number – 1306-1197895.

*Filter pressure taken from magnehelic gauge.

Static Pressure Sensor = 318Pa

Instrument Used (Ref N°.) HV03/1, HV03/4 & HV03/5

Date: 05/11/14	Engineer: Daniel Gilliland & Steven Hamilton	Sheet 3 of 15

H & V
H & V
H & V

Commissioning Services Ltd
EST: 1975

Kilknowe Office,
16 Barrmill Road,
Galston,
Ayshire, KA48HH.
TEL N°. 01563 821991
FAX N°. 01563 822220
E-Mail: talk2us@handv.co.uk

CONTRACT: NSGH, ADULT & CHILDRENS HOSPITAL – PLANTROOM 122

DUCT VOLUME TEST SHEET

SYSTEM: 122 – AHU 05 SUPPLY (4TH TO 7TH FLOOR WARDS)

VELOCITY PROFILE (taken facing air flow) **TEST HOLE LOCATION: LEVEL 8 RISER**

Test Hole Ref		Duct Dia (mm)		Duct Size (mm)		Duct Area		Design Air Volume		Design Air Velocity	
				Width x Height		M2		L/S		M/S	
Main TH				800	600	0.4800		2120		4.42	
4.00	4.70	4.80	4.50	4.10							
4.50	4.80	4.90	5.00	4.70							
4.60	4.90	5.10	5.20	4.70							
4.20	4.70	5.00	5.00	4.20							
Velocity Sub Totals											
17.30	19.10	19.80	19.70	17.70							

Total Velocity	Number of Readings	Average Velocity	Measured Air Volume	% Design	Static Pressure
M/S		M/S	L/S		Pa
93.6	20	4.68	2246	106	215

Remarks: Test Hole for Chilled Beam L1/1 Level 6

Instrument Used: HV03/1

Date: 05/11/14 | Engineer: Daniel Gilliland & Steven Hamilton | Sheet 4 of 15

H & V
H & V
H & V

Commissioning Services Ltd
EST: 1975

Kilknowe Office,
16 Barrmill Road,
Galston,
Ayshire, KA48HH.
TEL N°. 01563 821991
FAX N°. 01563 822220
E-Mail: talk2us@handv.co.uk

CONTRACT: NSGH, ADULT & CHILDRENS HOSPITAL – PLANTROOM 122

DUCT VOLUME TEST SHEET

SYSTEM: 122 – AHU 05 SUPPLY (4TH TO 7TH FLOOR WARDS)

VELOCITY PROFILE (taken facing air flow)

Test Hole Ref		Duct Dia (mm)		Duct Size (mm)		Duct Area		Design Air Volume		Design Air Velocity	
				Width x Height		M2		L/S		M/S	
TH1		160				0.0201		40		1.99	
2.00	2.00										
2.10	2.00										
1.90	2.10										
2.00	2.00										
Velocity Sub Totals											
8.00	8.10										

Total Velocity	Number of Readings	Average Velocity	Measured Air Volume	% Design	Static Pressure
M/S		M/S	L/S		Pa
16.1	8	2.01	40.5	101	67

Remarks: Test Hole for Chilled Beam L1/1 Level 4.

Instrument Used: HV03/1

Date: 05/11/14 | Engineer: Daniel Gilliland & Steven Hamilton | Sheet 5 of 15

H & V
H & V
H & V

Commissioning Services Ltd
EST: 1975

Kilknowe Office,
16 Barrmill Road,
Galston,
Ayshire, KA48HH.
TEL N°. 01563 821991
FAX N°. 01563 822220
E-Mail: talk2us@handv.co.uk

CONTRACT: NSGH, ADULT & CHILDRENS HOSPITAL – PLANTROOM 122

DUCT VOLUME TEST SHEET

SYSTEM: 122 – AHU 05 SUPPLY (4TH TO 7TH FLOOR WARDS)

VELOCITY PROFILE (taken facing air flow)

Test Hole Ref		Duct Dia (mm)		Duct Size (mm)		Duct Area		Design Air Volume		Design Air Velocity	
				Width x Height		M2		L/S		M/S	
TH2		160				0.0201		40		1.99	
2.10	2.10										
2.10	2.20										
2.00	2.00										
2.10	2.10										

Velocity Sub Totals

8.30	8.40										

Total Velocity	Number of Readings	Average Velocity	Measured Air Volume	% Design	Static Pressure
M/S		M/S	L/S		Pa
16.7	8	2.09	42.0	105	73

Remarks: Test Hole for Chilled Beam L2/5 Level 4.

Instrument Used: HV03/1

Date: 05/11/14 | Engineer: Daniel Gilliland & Steven Hamilton | Sheet 6 of 15

H & V
H & V
H & V

Commissioning Services Ltd
EST: 1975

Kilknowe Office,
16 Barrmill Road,
Galston,
Ayrshire, KA48HH.
TEL N°. 01563 821991
FAX N°. 01563 822220
E-Mail: talk2us@handv.co.uk

CONTRACT: NSGH, ADULT & CHILDRENS HOSPITAL – PLANTROOM 122

CHILLED BEAM BALANCE SHEET

SYSTEM: 122 – AHU 05 SUPPLY (4TH TO 7TH FLOOR WARDS)

LEVEL 7

Chilled Beam Data			Design Data		Test Data			
No.	Size (mm)	Setting	Volume (l/s)	Pressure (Pa)	Initial Pressure (Pa)	Final Pressure (Pa)	Final Volume (l/s)	% Design
CB/W1/L1/1	N/A	N/A	40	51.8	49	56	41.6	104
CB/W1/L1/2	N/A	N/A	40	51.8	53	55	41.2	103
CB/W1/L1/3	N/A	N/A	40	51.8	56	56	41.6	104
CB/W1/L1/4	N/A	N/A	40	51.8	59	56	41.6	104
CB/W1/L1/5	N/A	N/A	40	51.8	69	57	42.0	105
CB/W1/L1/6	N/A	N/A	40	51.8	77	57	42.0	105
CB/W1/L1/7	N/A	N/A	40	51.8	82	58	42.3	106
CB/W1/L1/8	N/A	N/A	40	51.8	86	57	42.0	105
CB/W1/L1/9	N/A	N/A	40	51.8	58	57	42.0	105
CB/W1/L1/10	N/A	N/A	40	51.8	68	58	42.3	106
CB/W1/L1/11	N/A	N/A	40	51.8	72	58	42.3	106
CB/W1/L1/12	N/A	N/A	40	51.8	79	57	42.0	105
CB/W1/L1/13	N/A	N/A	40	51.8	79	56	41.6	104
CB/W1/L1/14	N/A	N/A	40	51.8	80	57	42.0	105

REMARKS

INSTRUMENT USED: HV03/1

Date:	03/11/14	Engineer:	Daniel Gilliland & Steven Hamilton	Sheet 7 of 15

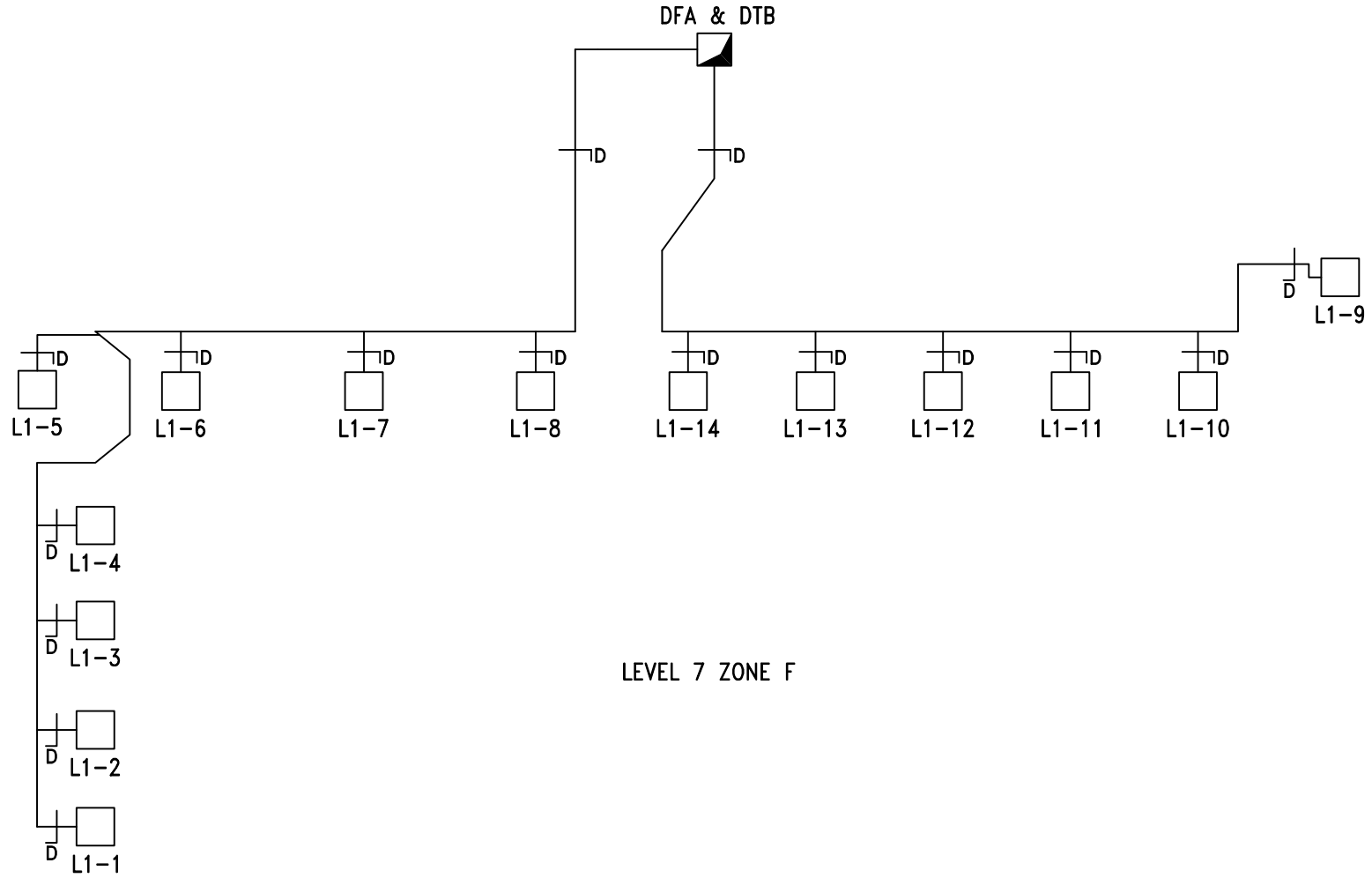

ALL CHILLED BEAMS PRFIXED WITH CB/W1/

SHEET: 8 OF 15

H&V Commissioning Services Limited
Kilknowe Office
16 Barrmill Road
Galston
East Ayrshire, KA4 8HH
Tel : 01563 821991
Fax: 01563 822220 email: talk2us@handv.co.uk

A49618526

CONTRACT: NSGH, ADULT & CHILDREN'S HOSPITAL - PLANTROOM 122	**TITLE:** SCHEMATIC LAYOUT OF 122-AHU 05 SUPPLY LEVEL 7	**DRAWN:** LH/DG	
CLIENT: MERCURY ENGINEERING UK		**DATE:** 06/11/14	
		DRG. No.: 5902/V11	

H & V
H & V
H & V

Commissioning Services Ltd
EST: 1975

Kilknowe Office,
16 Barrmill Road,
Galston,
Ayrshire, KA48HH.
TEL N°. 01563 821991
FAX N°. 01563 822220
E-Mail: talk2us@handv.co.uk

CONTRACT: NSGH, ADULT & CHILDRENS HOSPITAL – PLANTROOM 122

CHILLED BEAM BALANCE SHEET

SYSTEM: 122 – AHU 05 SUPPLY (4TH TO 7TH FLOOR WARDS)

LEVEL 6

Chilled Beam Data			Design Data		Test Data			
No.	Size (mm)	Setting	Volume (l/s)	Pressure (Pa)	Initial Pressure (Pa)	Final Pressure (Pa)	Final Volume (l/s)	% Design
CB/W1/L1/1	N/A	N/A	40	51.8	49	54	40.8	102
CB/W1/L1/2	N/A	N/A	40	51.8	53	53	40.5	101
CB/W1/L1/3	N/A	N/A	40	51.8	54	55	41.2	103
CB/W1/L1/4	N/A	N/A	40	51.8	56	55	41.2	103
CB/W1/L1/5	N/A	N/A	40	51.8	56	56	41.6	104
CB/W1/L1/6	N/A	N/A	40	51.8	75	55	41.2	103
CB/W1/L1/7	N/A	N/A	40	51.8	73	54	40.8	102
CB/W1/L1/8	N/A	N/A	40	51.8	76	55	41.2	103
CB/W1/L1/9	N/A	N/A	40	51.8	72	55	41.2	103
CB/W1/L1/10	N/A	N/A	40	51.8	73	56	41.6	104
CB/W1/L1/11	N/A	N/A	40	51.8	73	55	41.2	103
CB/W1/L1/12	N/A	N/A	40	51.8	80	55	41.2	103
CB/W1/L1/13	N/A	N/A	40	51.8	80	54	40.8	102
CB/W1/L1/14	N/A	N/A	40	51.8	85	54	40.8	102

REMARKS

INSTRUMENT USED: HV03/1

Date:	03/11/14	Engineer:	Daniel Gilliland & Steven Hamilton	Sheet 9 of 15

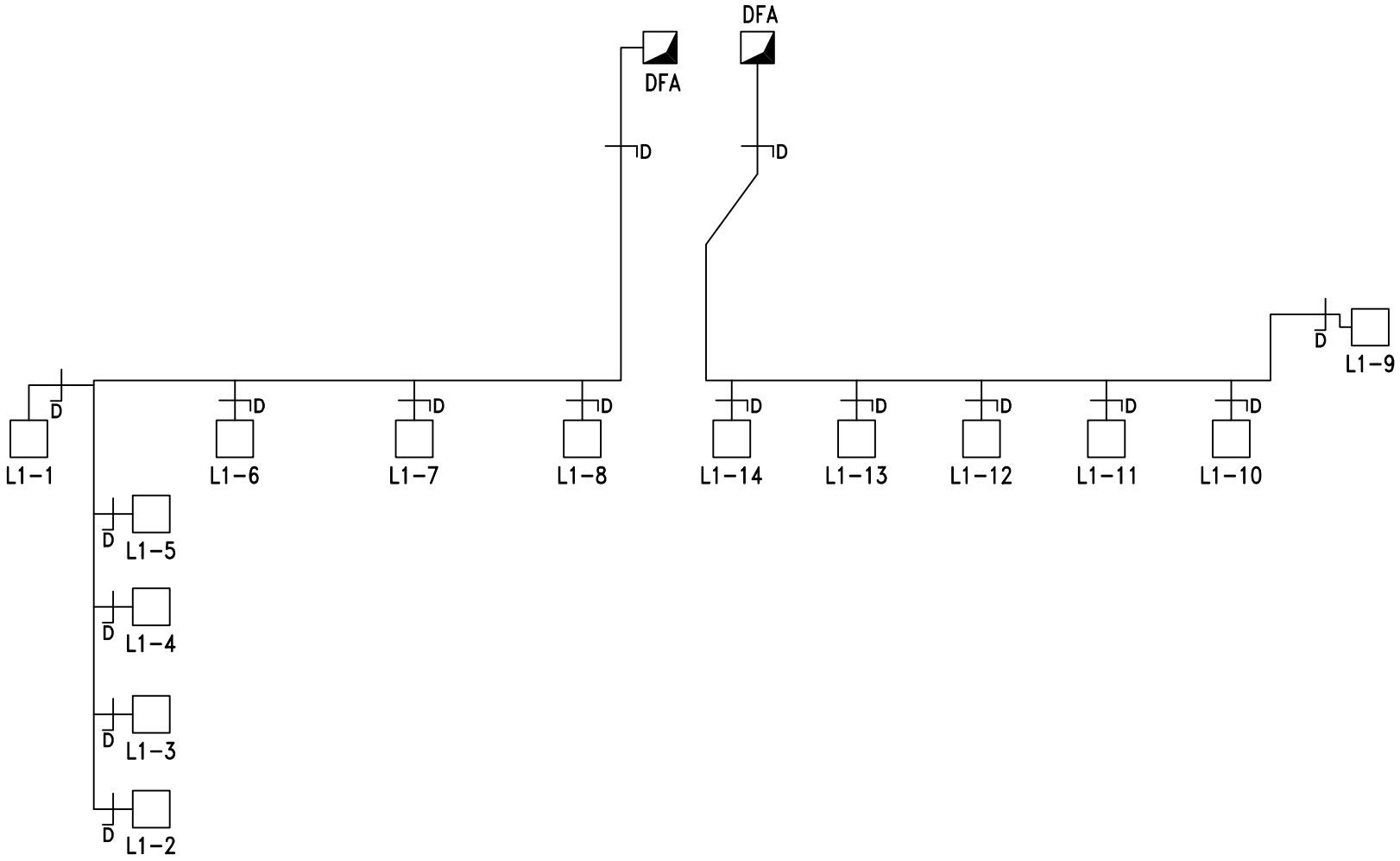

ALL CHILLED BEAMS PRFIXED WITH CB/W1/

SHEET: 10 OF 15

H&V Commissioning Services Limited **Kilknowe Office** **16 Barrmill Road** **Galston** **East Ayrshire, KA4 8HH** **Tel : 01563 821991** **Fax: 01563 822220 email: talk2us@handv.co.uk**	**CONTRACT:** **NSGH, ADULT & CHILDREN'S HOSPITAL - PLANTROOM 122** **CLIENT:** **MERCURY ENGINEERING UK**	**TITLE:** **SCHEMATIC LAYOUT OF** **122-AHU 05 SUPPLY LEVEL 6**	**DRAWN:** **LH/DG** **DATE:** **06/11/14** **DRG. No.:** **5902/V12**

H & V
H & V
H & V

Commissioning Services Ltd
EST: 1975

Kilknowe Office,
16 Barrmill Road,
Galston,
Ayrshire, KA48HH.
TEL N°. 01563 821991
FAX N°. 01563 822220
E-Mail: talk2us@handv.co.uk

CONTRACT: NSGH, ADULT & CHILDRENS HOSPITAL – PLANTROOM 122

CHILLED BEAM BALANCE SHEET

SYSTEM: 122 – AHU 05 SUPPLY (4TH TO 7TH FLOOR WARDS)

LEVEL 5

Chilled Beam Data			Design Data		Test Data			
No.	Size (mm)	Setting	Volume (l/s)	Pressure (Pa)	Initial Pressure (Pa)	Final Pressure (Pa)	Final Volume (l/s)	% Design
CB/W1/L1/1	N/A	N/A	40	51.8	48	56	41.6	104
CB/W1/L1/2	N/A	N/A	40	51.8	52	56	41.6	104
CB/W1/L1/3	N/A	N/A	40	51.8	53	56	41.6	104
CB/W1/L1/4	N/A	N/A	40	51.8	55	55	41.2	103
CB/W1/L1/5	N/A	N/A	40	51.8	55	56	41.6	104
CB/W1/L1/6	N/A	N/A	40	51.8	72	53	40.5	101
CB/W1/L1/7	N/A	N/A	40	51.8	70	53	40.5	101
CB/W1/L1/8	N/A	N/A	40	51.8	71	53	40.5	101
CB/W1/L1/9	N/A	N/A	40	51.8	70	53	40.5	101
CB/W1/L1/10	N/A	N/A	40	51.8	72	54	40.8	102
CB/W1/L1/11	N/A	N/A	40	51.8	72	54	40.8	102
CB/W1/L1/12	N/A	N/A	40	51.8	76	55	41.2	103
CB/W1/L1/13	N/A	N/A	40	51.8	77	54	40.8	102
CB/W1/L1/14	N/A	N/A	40	51.8	79	54	40.8	102

REMARKS

INSTRUMENT USED: HV03/1

Date:	03/11/14	Engineer:	Daniel Gilliland & Steven Hamilton	Sheet 11 of 15

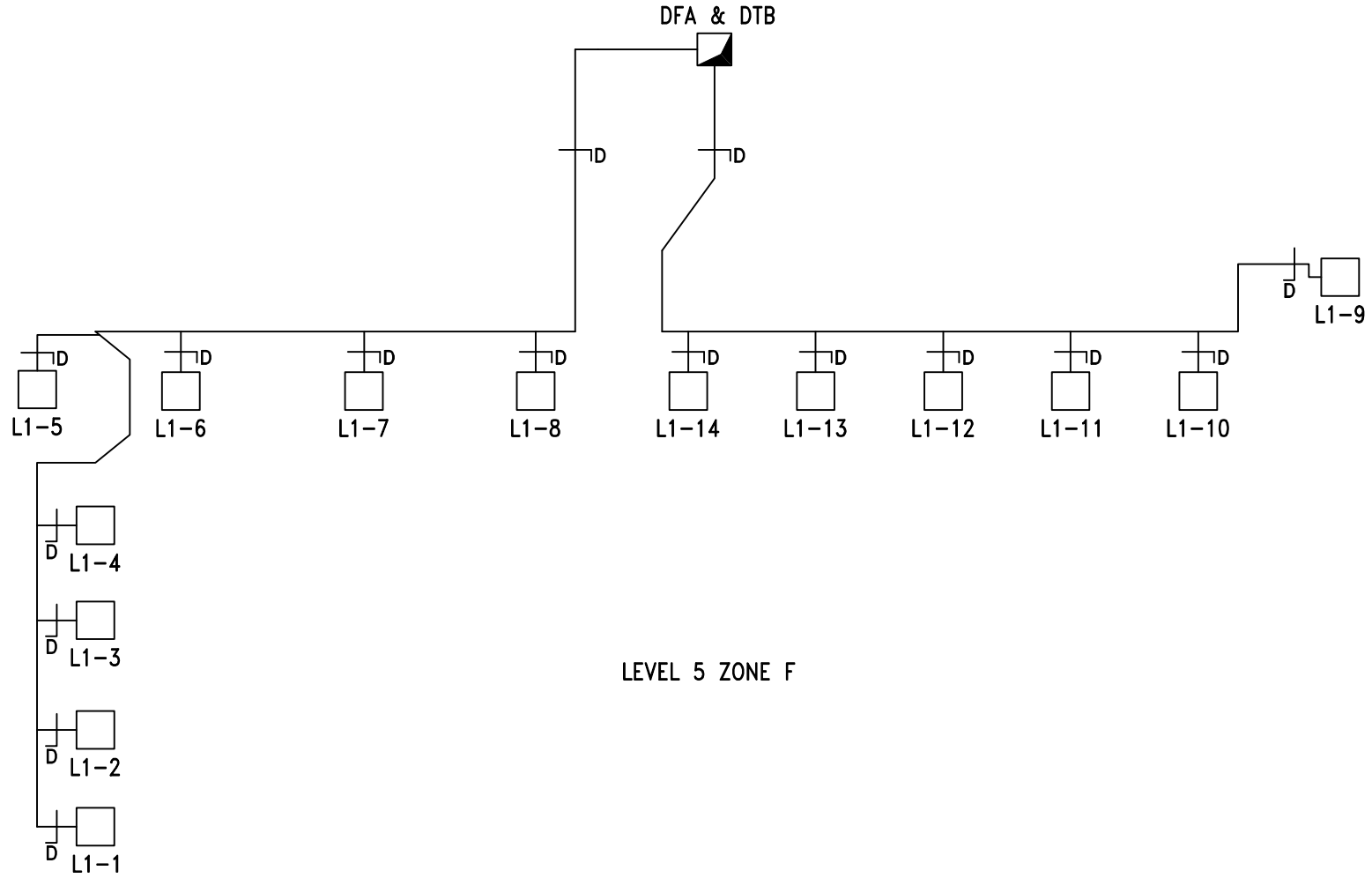

ALL CHILLED BEAMS PRFIXED WITH CB/W1/

SHEET: 12 OF 15

H&V Commissioning Services Limited
Kilknowe Office
16 Barrmill Road
Galston
East Ayrshire, KA4 8HH
Tel : 01563 821991
Fax: 01563 822220 email: talk2us@handv.co.uk

A49618526

CONTRACT: NSGH, ADULT & CHILDREN'S HOSPITAL - PLANTROOM 122	**TITLE:** SCHEMATIC LAYOUT OF 122-AHU 05 SUPPLY LEVEL 5	**DRAWN:** LH/DG	
CLIENT: MERCURY ENGINEERING UK		**DATE:** 06/11/14	
		DRG. No.: 5902/V13	

H & V
H & V
H & V

Commissioning Services Ltd
EST: 1975

Kilknowe Office,
16 Barrmill Road,
Galston,
Ayrshire, KA48HH.
TEL N°. 01563 821991
FAX N°. 01563 822220
E-Mail: talk2us@handv.co.uk

CONTRACT: NSGH, ADULT & CHILDRENS HOSPITAL – PLANTROOM 122

CHILLED BEAM BALANCE SHEET

SYSTEM: 122 – AHU 05 SUPPLY (4TH TO 7TH FLOOR WARDS)

LEVEL 4

Chilled Beam Data			Design Data		Test Data			
No.	Size (mm)	Setting	Volume (l/s)	Pressure (Pa)	Initial Pressure (Pa)	Final Pressure (Pa)	Final Volume (l/s)	% Design
CB/W1/L1/1	N/A	N/A	40	51.8	29	53	40.5	101
CB/W1/L1/2	N/A	N/A	40	51.8	31	53	40.5	101
CB/W1/L2/1	N/A	N/A	40	51.8	35	53	40.5	101
CB/W1/L2/2	N/A	N/A	40	63	37	63	40.0	100
CB/W1/L2/3	N/A	N/A	40	63	57	65	40.6	102
CB/W1/L2/4	N/A	N/A	40	63	62	64	40.3	101
CB/W1/L2/5	N/A	N/A	40	63	53	65	40.6	102
CB/W1/L2/6	N/A	N/A	40	63	56	65	40.6	102
CB/W1/L2/7	N/A	N/A	40	63	60	66	40.9	102
CB/W1/L2/8	N/A	N/A	40	63	60	65	40.6	102
CB/W1/L2/9	N/A	N/A	40	63	61	65	40.6	102

REMARKS

INSTRUMENT USED: HV03/1

Date:	03/11/14	Engineer:	Daniel Gilliland & Steven Hamilton	Sheet 13 of 15

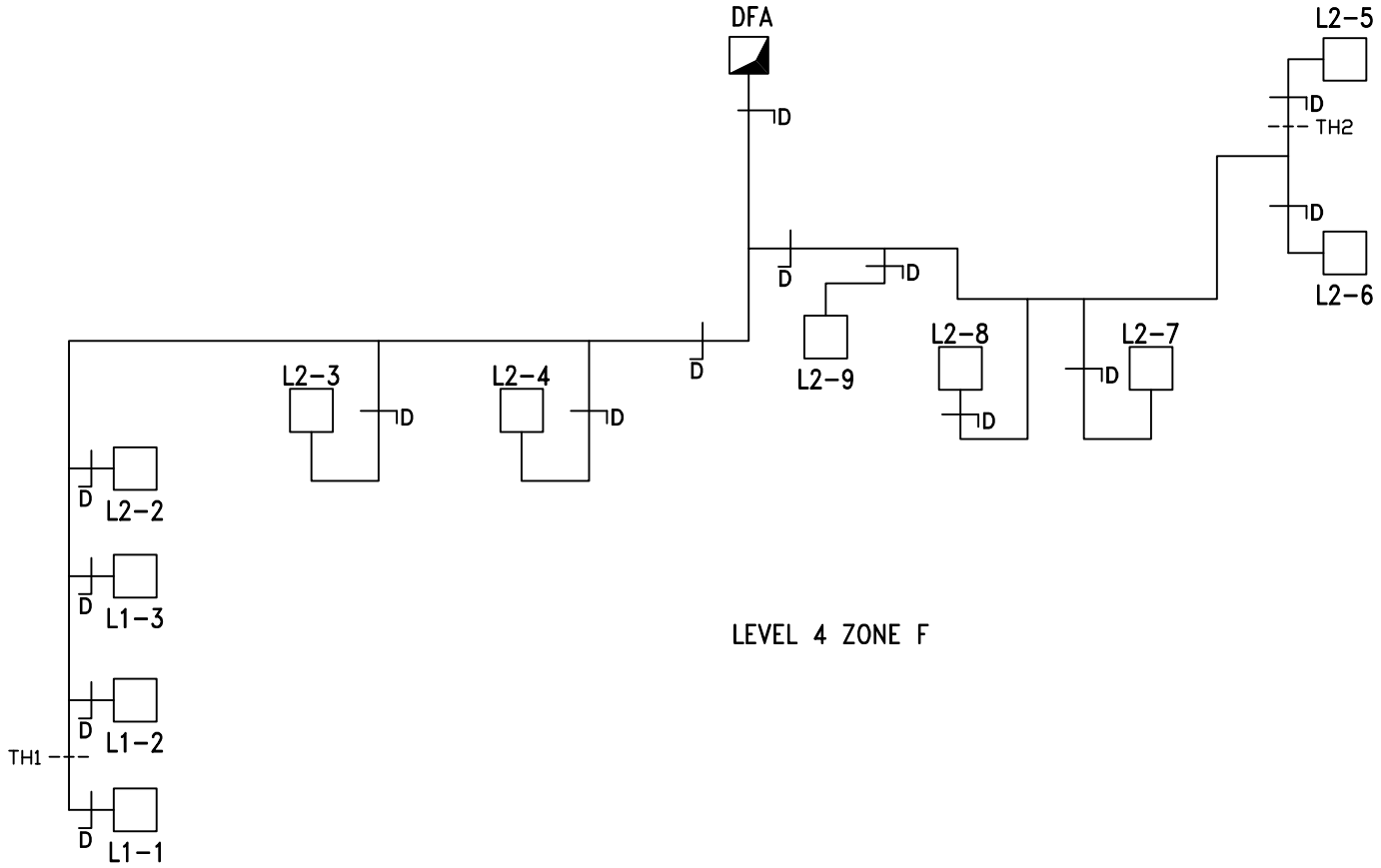

ALL CHILLED BEAMS PRFIXED WITH CB/W1/

SHEET: 14 OF 15

H&V Commissioning Services Limited **Kilknowe Office** **16 Barrmill Road** **Galston** **East Ayrshire, KA4 8HH** **Tel : 01563 821991** **Fax: 01563 822220 email: talk2us@handv.co.uk**	**CONTRACT:** **NSGH, ADULT & CHILDREN'S HOSPITAL - PLANTROOM 122** **CLIENT:** **MERCURY ENGINEERING UK**	**TITLE:** **SCHEMATIC LAYOUT OF** **122-AHU 05 SUPPLY LEVEL 4**	**DRAWN:** **LH/DG** **DATE:** **06/11/14** **DRG. No.:** **5902/V14**

A49618526

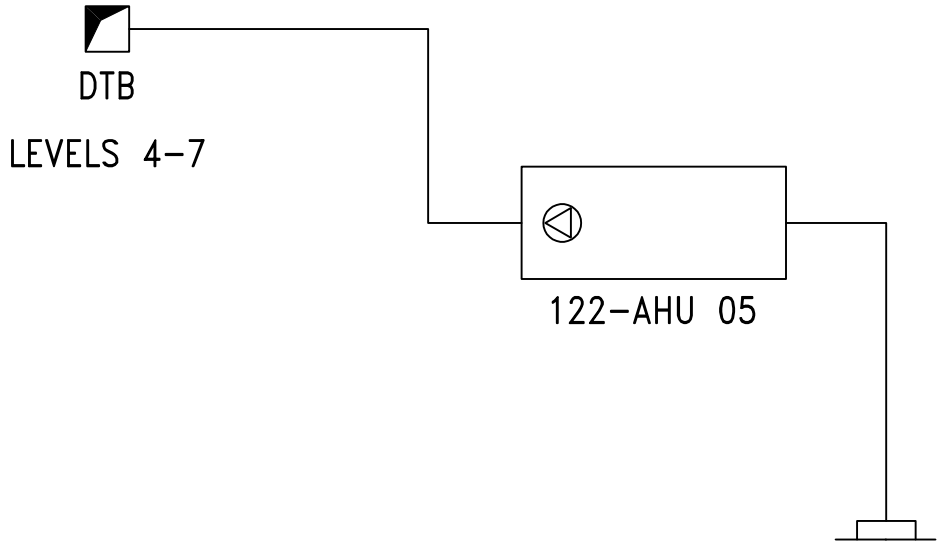

PLANTROOM 122 LEVEL 12

SHEET: 15 OF 15

H&V Commissioning Services Limited
Kilknowe Office
16 Barrmill Road
Galston
East Ayrshire, KA4 8HH
Tel : 01563 821991
Fax: 01563 822220 email: talk2us@handv.co.uk

A49618526

CONTRACT: NSGH, ADULT & CHILDREN'S HOSPITAL - PLANTROOM 122	TITLE: SCHEMATIC LAYOUT OF 122-AHU 05 SUPPLY	DRAWN: LH/GD
CLIENT: MERCURY ENGINEERING UK		DATE: 01/11/14
		DRG. No.: 5902/V15

H & V
H & V
H & V

Commissioning Services Ltd
EST: 1975

Kilknowe Office,
16 Barrmill Road,
Galston,
Ayrshire, KA48HH.
TEL N°. 01563 821991
FAX N°. 01563 822220
E-Mail: talk2us@handv.co.uk

CONTRACT: NSGH, ADULT & CHILDRENS HOSPITAL – PLANTROOM 122

SYSTEM: 122 - AHU 05 DIRTY EXTRACT (4TH TO 7TH FLOOR WARDS)

WITNESSING OF TESTING AND BALANCING

	Client Representative / Commissioning Manager	Client
Witnessed By:	Julie Miller	
Representing:	Brookfield Multiplex	
Signature:	[redacted]	
Date:	18/12/14	
Witnessed By:		
Representing:		
Signature:		
Date:		

Remarks:

H & V
H & V
H & V

Commissioning Services Ltd
EST: 1975

Kilknowe Office,
16 Barrmill Road,
Galston,
Ayrshire, KA48HH.
TEL N°. 01563 821991
FAX N°. 01563 822220
E-Mail: talk2us@handv.co.uk

CONTRACT: NSGH, ADULT & CHILDRENS HOSPITAL – PLANTROOM 122

SYSTEM: 122 – AHU 05 DIRTY EXTRACT (4TH TO 7TH FLOOR WARDS)

	AIR SYSTEMS PRE COMMISSIONING SHEET	✓	X	N/A
1.	Check AHU for damage and that all the components are secure	✓		
2.	Check the transit straps have been removed, if applicable	✓		
3.	Check pulleys are secure, tight, aligned and belts are correctly tensioned, if applicable	✓		
4.	Check with the controls engineer that the system is available to run and that plant rotation is correct	✓		
5.	Check all ductwork/air terminals are fitted and that air regulating dampers are open	✓		
6.	Check louvres are fitted and clear from obstructions, if applicable	✓		
7.	Check fire dampers are open, if applicable	✓		
8.	Check the motor overloads are suitable and set			✓
9.	Check VAV or CAV boxes are installed correctly and ready for use.			✓
10.	Check the floor plenums are complete, if applicable			✓
11.	Complete commissioning test sheets.	✓		

COMMENTS

H & V
H & V
H & V

Commissioning Services Ltd
EST: 1975

Kilknowe Office,
16 Barrmill Road,
Galston,
Ayshire, KA48HH.
TEL N°. 01563 821991
FAX N°. 01563 822220
E-Mail: talk2us@handv.co.uk

CONTRACT: NSGH, ADULT & CHILDRENS HOSPITAL – PLANTROOM 122

AHU TEST SHEET

SYSTEM: 122 – AHU 05 DIRTY EXTRACT (4TH TO 7TH FLOOR WARDS)

AHU											
AHU Manufacturer			Barkell		Fan Size			500			
Fan Manufacturer			Comefri		AHU Serial No			OP1 B305 9362			
Fan Type			Centrifugal		AHU Model N°.			TZAF 500 RFF			
			Design			**Test**				**% Design**	
Air Volume (L/S)			3038			3273				108	
External Static Pressure (Pa)			430		Inlet	287	Outlet	50	Total	337	
Fan Rotational Speed (R.P.M)			1292			1292					
Filter Test Data	Pre Filter (Pa)	Inlet	N/A		Outlet	N/A			ΔP	*20	
	Sec Filter (Pa)	Inlet	N/A		Outlet	N/A			ΔP	N/A	

MOTOR				
Manufacturer	TEC	Output kW	4.0	
Serial N°	1306-1197900	Motor Full Load Current	8.14	Amps
Voltage	400	Motor Running Current	6.2	Amps
	Design	**Test**		
Rotational Speed.	1430	1430		

DRIVE DETAILS			
Motor Pulley/Shaft Size (mm∅)	SPZ 140 28	Motor Pulley Taper Lock Size	1610
Fan Pulley/Shaft Size (mm∅)	SPZ 155 25	Fan Pulley Taper Lock Size	2517
Belt Type/Size	XPZ 1180	N°. Of Belts	4
Shaft Centres mm	365	Adjustment	- 40 + 15 mm
Variable Speed Drive	Yes	Set Point	50Hz

STANDBY PLANT							
Test Air Volume	3273	Inlet Pressure	287	Motor Rotational Speed	1430	Motor Running Current	
% Design	108	Outlet Pressure	50	Fan Rotational Speed	1292	6.2	Amps
Variable Speed Drive			Yes	Set Point	50Hz		

Comments. N/A – Not Applicable

2nd Motor Serial Number – 1306-1197832

*Filter pressure taken from magnehelic gauge.

Instrument Used (Ref N°.) HV03/1, HV03/4 & HV03/5

Date: 05/11/14	Engineer: Daniel Gilliland & Steven Hamilton	Sheet 3 of 14

H & V
H & V
H & V

Commissioning Services Ltd
EST: 1975

Kilknowe Office,
16 Barrmill Road,
Galston,
Ayshire, KA48HH.
TEL N°. 01563 821991
FAX N°. 01563 822220
E-Mail: talk2us@handv.co.uk

CONTRACT: NSGH, ADULT & CHILDRENS HOSPITAL – PLANTROOM 122

DUCT VOLUME TEST SHEET

SYSTEM: 122 – AHU 05 DIRTY EXTRACT (4TH TO 7TH FLOOR WARDS)

VELOCITY PROFILE (taken facing air flow) **TEST HOLE LOCATION: LEVEL 8 RISER**

Test Hole Ref		Duct Dia (mm)		Duct Size (mm)		Duct Area		Design Air Volume		Design Air Velocity	
				Width x Height		M2		L/S		M/S	
Main TH				1200	650	0.7800		3038		3.89	
5.10	4.30	4.80	4.90	5.00	4.60	4.60					
5.20	4.70	5.00	4.60	4.00	3.10	4.30					
5.20	4.30	4.70	3.60	3.20	1.60	3.60					
4.60	3.70	4.60	4.30	3.70	2.70	3.50					
Velocity Sub Totals											
20.10	17.00	19.10	17.40	15.90	12.00	16.00					

Total Velocity	Number of Readings	Average Velocity	Measured Air Volume	% Design	Static Pressure
M/S		M/S	L/S		Pa
117.5	28	4.20	3273	108	252

Remarks:

Instrument Used: HV03/1

Date: 05/11/14 | Engineer: Daniel Gilliland & Steven Hamilton | Sheet 4 of 15

H & V
H & V
H & V

Commissioning Services Ltd
EST: 1975

Kilknowe Office,
16 Barrmill Road,
Galston,
Ayshire, KA48HH.
TEL N°. 01563 821991
FAX N°. 01563 822220
E-Mail: talk2us@handv.co.uk

CONTRACT: NSGH, ADULT & CHILDRENS HOSPITAL – PLANTROOM 122

DUCT VOLUME TEST SHEET

SYSTEM: 122 – AHU 05 DIRTY EXTRACT (4TH TO 7TH FLOOR WARDS)

VELOCITY PROFILE (taken facing air flow)

Test Hole Ref		Duct Dia (mm)		Duct Size (mm)		Duct Area		Design Air Volume		Design Air Velocity	
				Width x Height		M2		L/S		M/S	
TH1		160				0.0201		45		2.24	
2.20	2.20										
2.20	2.40										
2.40	2.30										
2.20	2.20										

Velocity Sub Totals

9.00	9.10										

Total Velocity	Number of Readings	Average Velocity	Measured Air Volume	% Design	Static Pressure
M/S		M/S	L/S		Pa
18.1	8	2.26	45.5	101	112

Remarks: Test Hole for Grille 504-TG002 to obtain factor.
Test Volume = 45.5 l/s ÷ Balometer Volume = 38 l/s = 1.2 Factor

Instrument Used: HV03/1

Date: 05/11/14 | Engineer: Daniel Gilliland & Steven Hamilton | Sheet 5 of 14

H & V
H & V
H & V

Commissioning Services Ltd
EST: 1975

Kilknowe Office,
16 Barrmill Road,
Galston,
Ayrshire, KA48HH.
TEL N°. 01563 821991
FAX N°. 01563 822220
E-Mail: talk2us@handv.co.uk

CONTRACT: NSGH, ADULT & CHILDRENS HOSPITAL – PLANTROOM 122

GRILLE TEST SHEET
SYSTEM: 122 – AHU 05 DIRTY EXTRACT (4TH TO 7TH FLOOR WARDS)

LEVEL 7

Design Data		Initial Test Data		Final Test & Regulation Data		
Terminal or Ref No	Design Air Volume l/s	Balometer Initial Air Volume l/s	Balometer Final Air Volume l/s	Balometer Factor	Balometer Final Air Volume l/s	% Design
*TG007	35	26	32	1.2	38.40	110
*TG006	45	31	39	1.2	46.80	104
*TG005	45	32	39	1.2	46.80	104
*TG003	45	36	39	1.2	46.80	104
*TG004	45	39	39	1.2	46.80	104
*TG002	45	42	40	1.2	48.00	107
*TG001	45	39	39	1.2	46.80	104
**TG011	45	35	40	1.2	48.00	107
**TG012	45	44	40	1.2	48.00	107
**TG013	45	47	40	1.2	48.00	107
**TG018	45	32	38	1.2	45.60	101
**TG017	45	33	39	1.2	46.80	104
**TG016	45	42	40	1.2	48.00	107
**TG014	45	44	40	1.2	48.00	107
**TG015	45	66	41	1.2	49.20	109
**TG010	62	111	57	1.2	68.40	110
**TG009	59	94	53	1.2	63.60	108

Remarks: *All Grilles prefixed with 505. **All Grilles prefixed with 504.

Instrument Used: HV01/15

Date: 03/11/14	Engineer: Daniel Gilliland & Steven Hamilton	Sheet 6 of 14

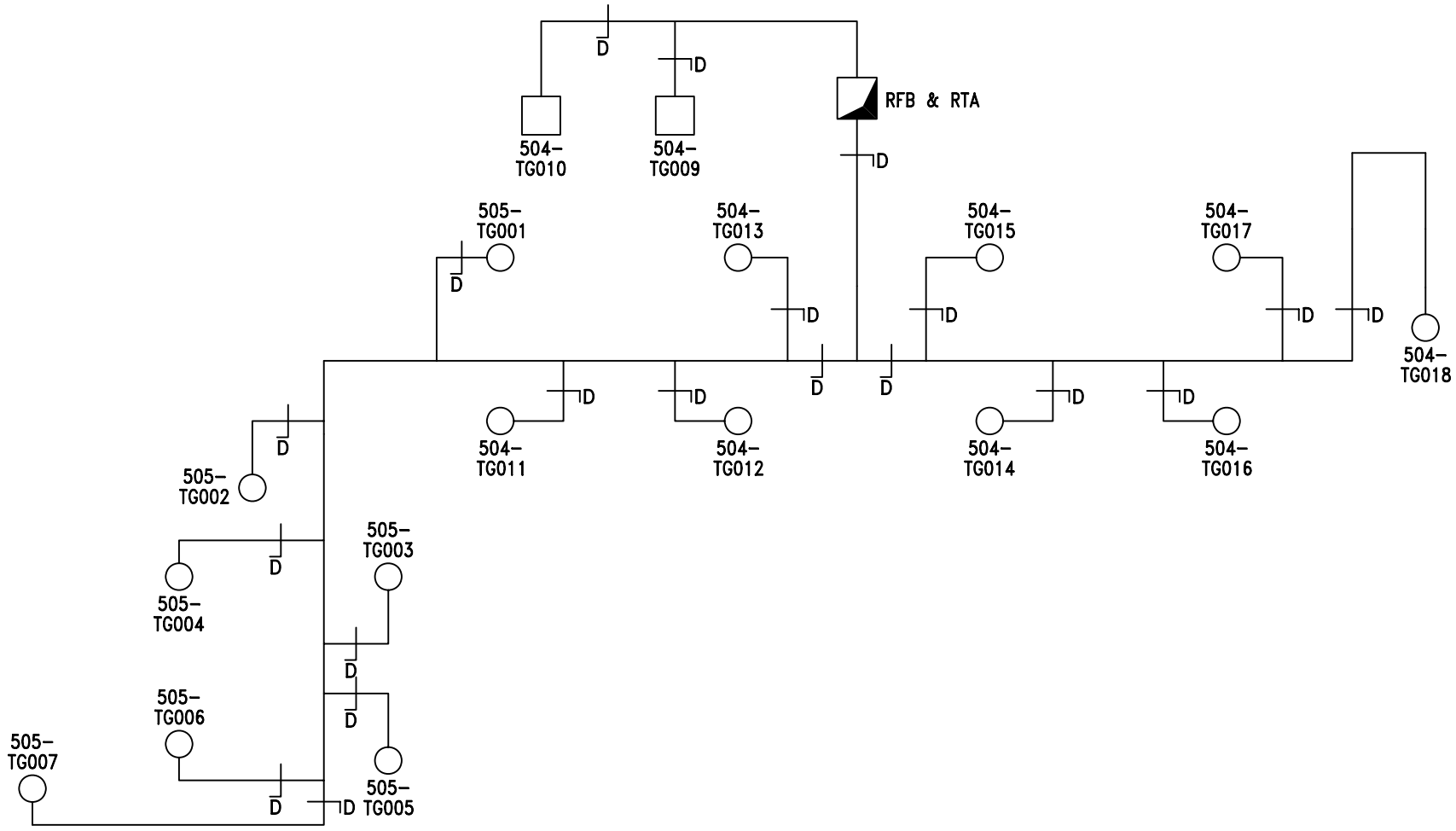

H&V Commissioning Services Limited
Kilknowe Office
16 Barrmill Road
Galston
East Ayrshire, KA4 8HH
Tel : 01563 821991
Fax: 01563 822220
email: talk2us@handv.co.uk

CONTRACT:
NSGH, ADULT & CHILDREN'S HOSPITAL - PLANTROOM 122

CLIENT:
MERCURY ENGINEERING LTD.

TITLE:
SCHEMATIC LAYOUT OF 122-AHU05 DIRTY EXTRACT LEVEL 7 - ZONE F

DRAWN: KL/DG

DATE: 18/11/14

DRG No.: 5902/V16

SHEET: 7 OF 14

H & V
H & V
H & V

Commissioning Services Ltd
EST: 1975

Kilknowe Office,
16 Barrmill Road,
Galston,
Ayrshire, KA48HH.
TEL N°. 01563 821991
FAX N°. 01563 822220
E-Mail: talk2us@handv.co.uk

CONTRACT: NSGH, ADULT & CHILDRENS HOSPITAL – PLANTROOM 122

GRILLE TEST SHEET
SYSTEM: 122 – AHU 05 DIRTY EXTRACT (4TH TO 7TH FLOOR WARDS)

LEVEL 6

Design Data		Initial Test Data		Final Test & Regulation Data		
Terminal or Ref No	Design Air Volume l/s	Balometer Initial Air Volume l/s	Balometer Final Air Volume l/s	Balometer Factor	Balometer Final Air Volume l/s	% Design
*TG010	62	128	56	1.2	67.20	108
*TG009	59	114	52	1.2	62.40	106
*TG018	45	43	38	1.2	45.60	101
*TG017	45	43	39	1.2	46.80	104
*TG016	45	43	38	1.2	45.60	101
*TG014	45	49	38	1.2	45.60	101
*TG015	45	52	39	1.2	46.80	104
**TG007	35	27	32	1.2	38.40	110
**TG006	45	27	39	1.2	46.80	104
**TG005	45	28	40	1.2	48.00	107
**TG003	45	33	40	1.2	48.00	107
**TG004	45	32	39	1.2	46.80	104
**TG002	45	40	39	1.2	46.80	104
**TG001	45	46	40	1.2	48.00	107
*TG011	45	44	40	1.2	48.00	107
*TG012	45	48	40	1.2	48.00	107
**TG013	45	47	40	1.2	48.00	107

Remarks *All Grilles prefixed with 504. **All Grilles prefixed with 505.

Instrument Used: HV01/15

Date: 03/11/14	Engineer: Daniel Gilliland & Steven Hamilton	Sheet 8 of 14

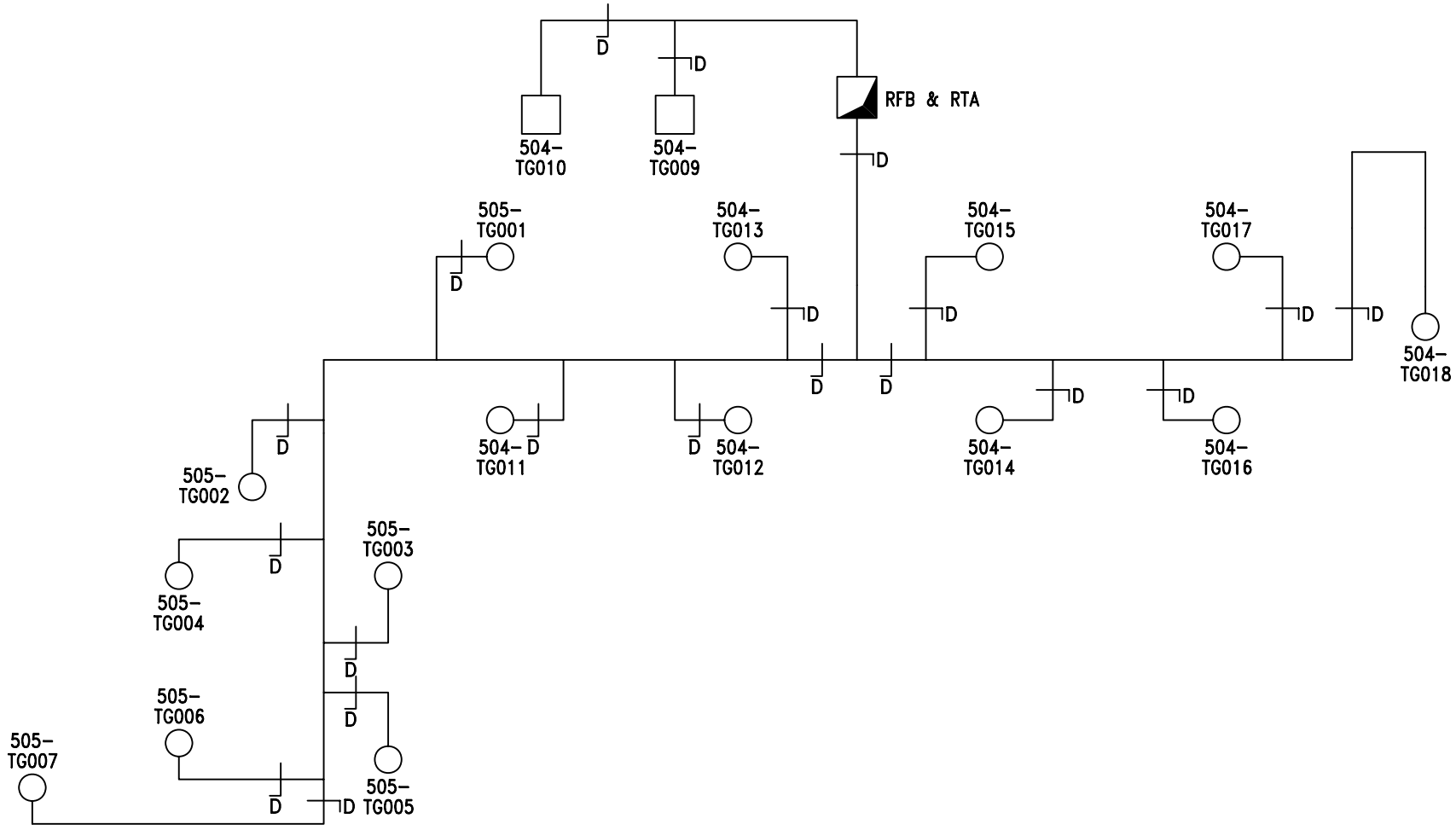

H&V Commissioning Services Limited
Kilknowe Office
16 Barrmill Road
Galston
East Ayrshire, KA4 8HH
Tel : 01563 821991
Fax: 01563 822220
email: talk2us@handv.co.uk

CONTRACT:
NSGH, ADULT & CHILDREN'S HOSPITAL - PLANTROOM 122

CLIENT:
MERCURY ENGINEERING LTD.

TITLE:
SCHEMATIC LAYOUT OF 122-AHU05 DIRTY EXTRACT LEVEL 6 - ZONE F

DRAWN: KL/DG

DATE: 18/11/14

DRG No.: 5902/V17

SHEET: 9 OF 14

H & V
H & V
H & V

Commissioning Services Ltd
EST: 1975

Kilknowe Office,
16 Barrmill Road,
Galston,
Ayrshire, KA48HH.
TEL N°. 01563 821991
FAX N°. 01563 822220
E-Mail: talk2us@handv.co.uk

CONTRACT: NSGH, ADULT & CHILDRENS HOSPITAL – PLANTROOM 122

GRILLE TEST SHEET
SYSTEM: 122 – AHU 05 DIRTY EXTRACT (4TH TO 7TH FLOOR WARDS)

LEVEL 5

Design Data		Initial Test Data		Final Test & Regulation Data		
Terminal or Ref No	Design Air Volume l/s	Balometer Initial Air Volume l/s	Balometer Final Air Volume l/s	Balometer Factor	Balometer Final Air Volume l/s	% Design
*TG007	35	25	30	1.2	36.00	103
*TG006	45	26	39	1.2	46.80	104
*TG005	45	27	39	1.2	46.80	104
*TG003	45	31	40	1.2	48.00	107
*TG004	45	37	40	1.2	48.00	107
*TG002	45	31	39	1.2	46.80	104
*TG001	45	37	39	1.2	46.80	104
**TG011	45	34	40	1.2	48.00	107
**TG012	45	45	40	1.2	48.00	107
**TG013	45	46	40	1.2	48.00	107
**TG018	45	32	39	1.2	46.80	104
**TG017	45	37	39	1.2	46.80	104
**TG016	45	42	39	1.2	46.80	104
**TG014	45	48	39	1.2	46.80	104
**TG015	45	45	40	1.2	48.00	107
**TG010	62	92	56	1.2	67.20	108
**TG009	59	106	53	1.2	63.60	108

Remarks *All Grilles prefixed with 505. **All Grilles prefixed with 504.

Instrument Used: HV01/15

Date: 03/11/14	Engineer: Daniel Gilliland & Steven Hamilton	Sheet 10 of 14

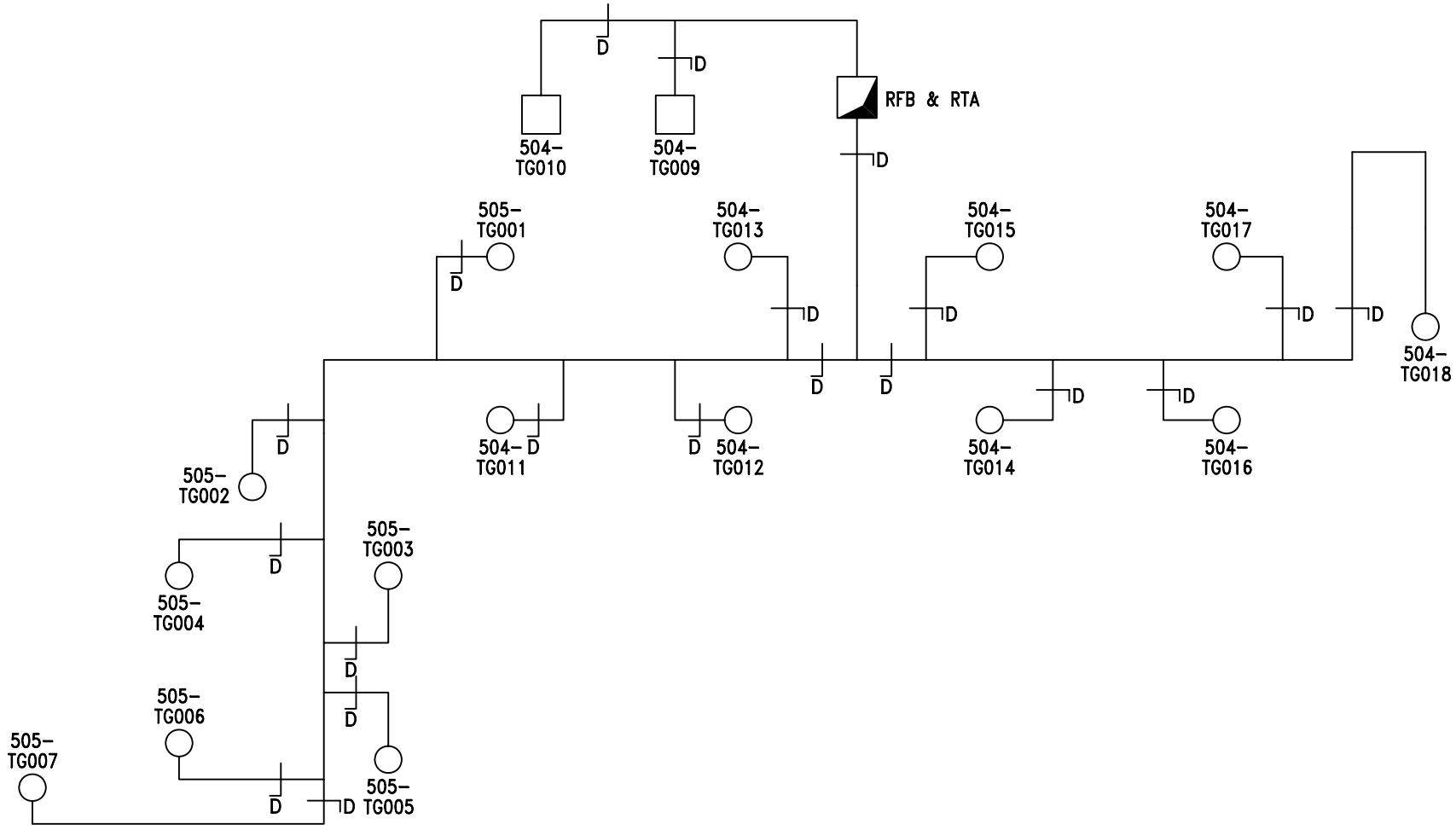

H&V Commissioning Services Limited
Kilknowe Office
16 Barrmill Road
Galston
East Ayrshire, KA4 8HH
Tel : 01563 821991
Fax: 01563 822220
email: talk2us@handv.co.uk

CONTRACT:
NSGH, ADULT & CHILDREN'S HOSPITAL - PLANTROOM 122

CLIENT:
MERCURY ENGINEERING LTD.

TITLE:
SCHEMATIC LAYOUT OF 122-AHU05 DIRTY EXTRACT LEVEL 5 - ZONE F

DRAWN: KL/DG

DATE: 18/11/14

DRG No.: 5902/V18

SHEET: 11 OF 14

H & V
H & V
H & V

Commissioning Services Ltd
EST: 1975

Kilknowe Office,
16 Barrmill Road,
Galston,
Ayrshire, KA48HH.
TEL N°. 01563 821991
FAX N°. 01563 822220
E-Mail: talk2us@handv.co.uk

CONTRACT: NSGH, ADULT & CHILDRENS HOSPITAL – PLANTROOM 122

GRILLE TEST SHEET
SYSTEM: 122 – AHU 05 DIRTY EXTRACT (4TH TO 7TH FLOOR WARDS)

LEVEL 4

Design Data		Initial Test Data		Final Test & Regulation Data		
Terminal or Ref No	Design Air Volume l/s	Balometer Initial Air Volume l/s	Balometer Final Air Volume l/s	Balometer Factor	Balometer Final Air Volume l/s	% Design
*TG006	45	24	40	1.2	48.00	107
*TG005	45	20	40	1.2	48.00	107
*TG004	45	25	39	1.2	46.80	104
*TG003	23	12	40	1.2	48.00	209
*TG002	41	39	35	1.2	42.00	102
*TG001	45	37	39	1.2	46.80	104
**TG002	45	31	38	1.2	45.60	101
**TG001	45	46	39	1.2	46.80	104
**TG015	45	29	40	1.2	48.00	107
**TG006	45	30	39	1.2	46.80	104
**TG005	45	45	39	1.2	46.80	104
**TG003	45	46	38	1.2	45.60	101
**TG004	45	31	38	1.2	45.60	101
**TG009	62	101	54	1.2	64.80	105
**TG008	59	108	52	1.2	62.40	106

Remarks *All Grilles prefixed with 505. **All Grilles prefixed with 504.

Instrument Used: HV01/15

Date: 03/11/14	Engineer: Daniel Gilliland & Steven Hamilton	Sheet 12 of 14

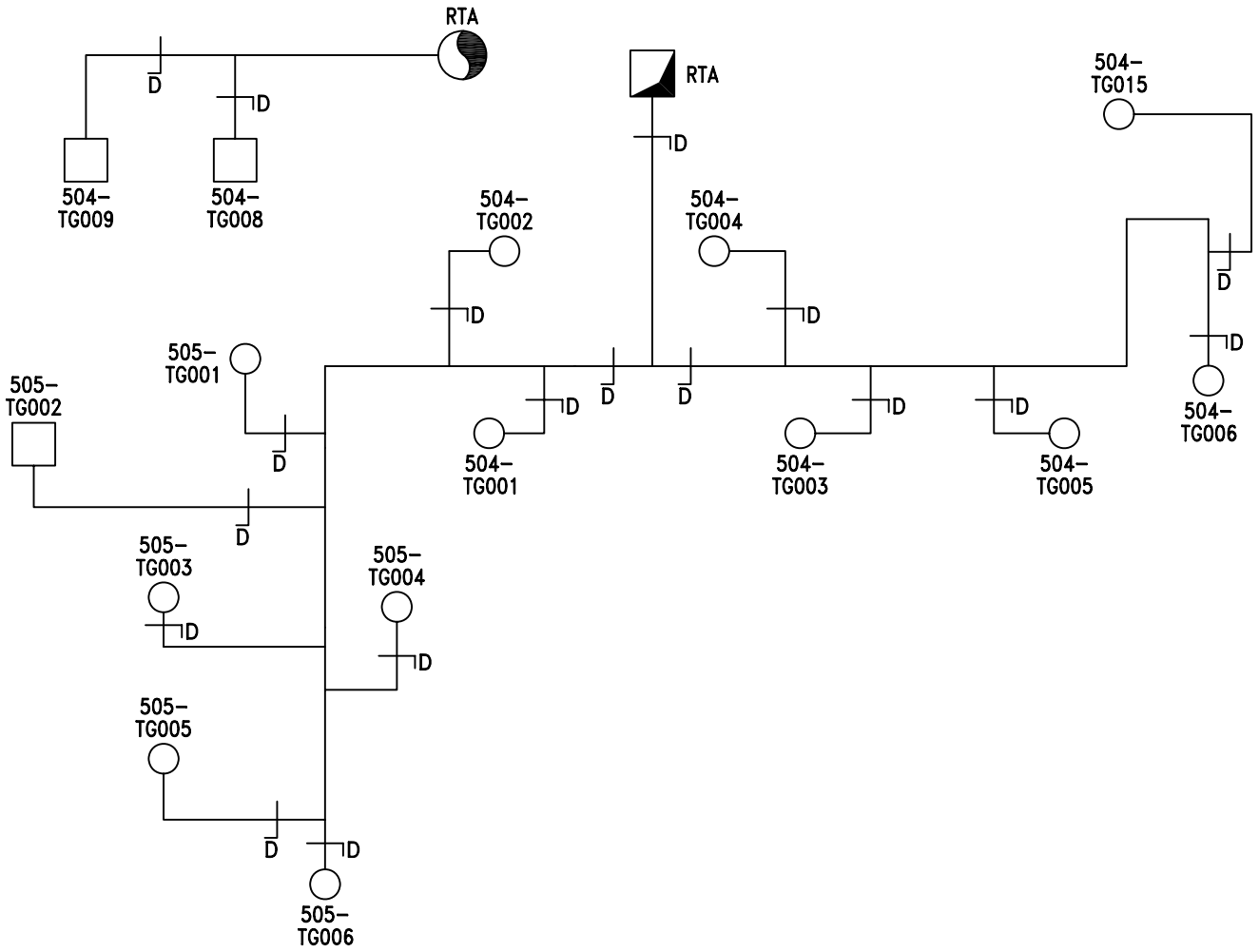

H&V Commissioning Services Limited
Kilknowe Office
16 Barrmill Road
Galston
East Ayrshire, KA4 8HH
Tel : 01563 821991
Fax: 01563 822220
email: talk2us@handv.co.uk

CONTRACT:
NSGH, ADULT & CHILDREN'S HOSPITAL - PLANTROOM 122

CLIENT:
MERCURY ENGINEERING LTD.

TITLE:
SCHEMATIC LAYOUT OF 122-AHU05 DIRTY EXTRACT LEVEL 4 - ZONE F

DRAWN: KL/DG
DATE: 18/11/14
DRG No.: 5902/V19
SHEET: 13 OF 14

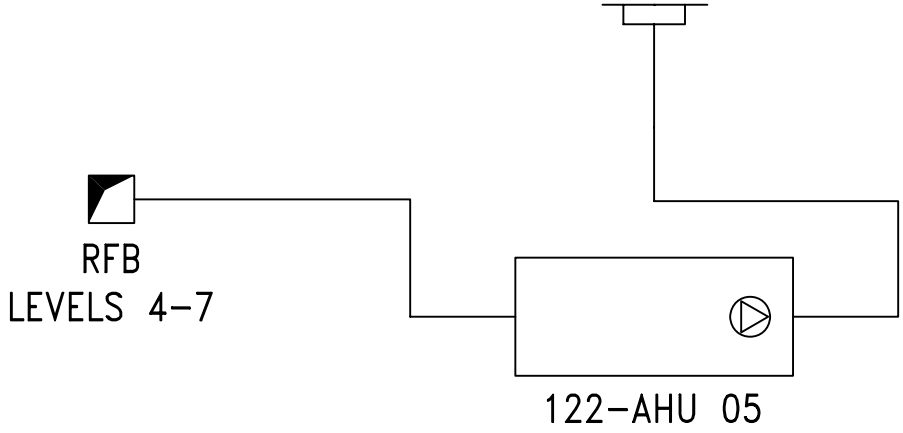

PLANTROOM 122 LEVEL 12

SHEET: 14 OF 14

H&V Commissioning Services Limited
Kilknowe Office
16 Barrmill Road
Galston
East Ayrshire, KA4 8HH
Tel : 01563 821991
A49618320
Fax: 01563 822220 email: talk2us@handv.co.uk

CONTRACT:
NSGH, ADULT & CHILDREN'S HOSPITAL - PLANTROOM 122

CLIENT:
MERCURY ENGINEERING UK

TITLE:
SCHEMATIC LAYOUT OF

122-AHU 05 EXTRACT

DRAWN: LH/GD

DATE: 06/11/14

DRG. No.: 5902/V20

H & V
H & V
H & V

Commissioning Services Ltd
EST: 1975

Kilknowe Office,
16 Barrmill Road,
Galston,
Ayrshire, KA48HH.
TEL N°. 01563 821991
FAX N°. 01563 822220
E-Mail: talk2us@handv.co.uk

CONTRACT: NSGH, ADULT & CHILDRENS HOSPITAL – PLANTROOM 122

SYSTEM: 122 – AHU 06 SUPPLY (4TH & 7TH FLOOR WARDS)

WITNESSING OF TESTING AND BALANCING

	Client Representative / Commissioning Manager	Client
Witnessed By:	David Wilson	
Representing:	Brookfield Multiplex	
Signature:	[redacted]	
Date:	27/11/14	
Witnessed By:		
Representing:		
Signature:		
Date:		

Remarks:

H & V
H & V
H & V

Commissioning Services Ltd
EST: 1975

Kilknowe Office,
16 Barrmill Road,
Galston,
Ayrshire, KA48HH.
TEL N°. 01563 821991
FAX N°. 01563 822220
E-Mail: talk2us@handv.co.uk

CONTRACT: NSGH, ADULT & CHILDRENS HOSPITAL – PLANTROOM 122

SYSTEM: 122 – AHU 06 SUPPLY (4TH TO 7TH FLOOR WARDS)

	AIR SYSTEMS PRE COMMISSIONING SHEET	✓	X	N/A
1.	Check AHU for damage and that all the components are secure	✓		
2.	Check the transit straps have been removed, if applicable	✓		
3.	Check pulleys are secure, tight, aligned and belts are correctly tensioned, if applicable	✓		
4.	Check with the controls engineer that the system is available to run and that plant rotation is correct	✓		
5.	Check all ductwork/air terminals are fitted and that air regulating dampers are open	✓		
6.	Check louvres are fitted and clear from obstructions, if applicable	✓		
7.	Check fire dampers are open, if applicable	✓		
8.	Check the motor overloads are suitable and set			✓
9.	Check VAV or CAV boxes are installed correctly and ready for use.			✓
10.	Check the floor plenums are complete, if applicable			✓
11.	Complete commissioning test sheets.	✓		

COMMENTS

H & V
H & V
H & V

Commissioning Services Ltd

EST: 1975

Kilknowe Office,
16 Barrmill Road,
Galston,
Ayshire, KA48HH.
TEL N°. 01563 821991
FAX N°. 01563 822220
E-Mail: talk2us@handv.co.uk

CONTRACT: NSGH, ADULT & CHILDRENS HOSPITAL – PLANTROOM 122

AHU TEST SHEET

SYSTEM: 122 – AHU 06 SUPPLY (4TH TO 7TH FLOOR WARDS)

AHU											
AHU Manufacturer			Barkell		Fan Size			450			
Fan Manufacturer			Comefri		AHU Serial No			R1LB220498			
Fan Type			Centrifugal		AHU Model N°.			TZAF450RFF			
			Design			**Test**				**% Design**	
Air Volume		(L/S)	3112			3228				104	
External Static Pressure		(Pa)	555		Inlet	78	Outlet	253	Total	331	
Fan Rotational Speed		(R.P.M)	1933			1662					
Filter Test Data	Pre Filter	(Pa)	Inlet	*	Outlet	*			ΔP	*	
	Sec Filter	(Pa)	Inlet	*	Outlet	*			ΔP	*	

MOTOR				
Manufacturer	TEC	Output kW	5.5	
Serial N°	1305-0265845	Motor Full Load Current	10.9	Amps
Voltage	400	Motor Running Current	8.6	Amps
	Design	**Test**		
Rotational Speed.	1450	1247		

DRIVE DETAILS				
Motor Pulley/Shaft Size (mm∅)	SPZ 200	38	Motor Pulley Taper Lock Size	2012
Fan Pulley/Shaft Size (mm∅)	SPZ 150	50	Fan Pulley Taper Lock Size	2517
Belt Type/Size	XPZ	1140	N°. Of Belts	4
Shaft Centres mm	300		Adjustment	- 30 + 25 mm
Variable Speed Drive	Yes		Set Point	43Hz

STANDBY PLANT						
Test Air Volume	3228	Inlet Pressure	78	Motor Rotational Speed	1508	Motor Running Current
% Design	104	Outlet Pressure	253	Fan Rotational Speed	2010	8.6 Amps
Variable Speed Drive			Yes	Set Point	43Hz	

Comments. N/A – Not Applicable

2nd Motor Serial Number – 1305-0265867.

*Filter pressure taken from magnehelic gauge.

Static Pressure Sensor = 253Pa

Instrument Used (Ref N°.) HV01/1, HV01/4 & HV06/5

Date: 18/11/14	Engineer: Ross Parker & Daniel Kane	Sheet 3 of 14

H & V
H & V
H & V

Commissioning Services Ltd
EST: 1975

Kilknowe Office,
16 Barrmill Road,
Galston,
Ayshire, KA48HH.
TEL N°. 01563 821991
FAX N°. 01563 822220
E-Mail: talk2us@handv.co.uk

CONTRACT: NSGH, ADULT & CHILDRENS HOSPITAL – PLANTROOM 122

DUCT VOLUME TEST SHEET

SYSTEM: 122 – AHU 06 SUPPLY (4TH TO 7TH FLOOR WARDS)

VELOCITY PROFILE (taken facing air flow) **TEST HOLE LOCATION: LEVEL 8 RISER**

Test Hole Ref		Duct Dia (mm)		Duct Size (mm)		Duct Area		Design Air Volume		Design Air Velocity	
				Width x Height		M2		L/S		M/S	
Main TH				1000	750	0.7500		3112		4.15	
3.90	4.40	4.10	4.20	3.80							
4.30	4.60	4.50	4.30	4.10							
4.50	4.50	4.70	4.60	4.10							
4.40	4.50	4.70	4.60	4.00							
3.90	4.30	4.30	4.40	3.90							
Velocity Sub Totals											
21.00	22.30	22.30	22.10	19.90							

Total Velocity	Number of Readings	Average Velocity	Measured Air Volume	% Design	Static Pressure
M/S		M/S	L/S		Pa
107.6	25	4.30	3228	104	184

Remarks:

Instrument Used: HV01/1

Date: 18/11/14 | Engineer: Ross Parker & Daniel Kane | Sheet 4 of 14

H & V
H & V
H & V

Commissioning Services Ltd
EST: 1975

Kilknowe Office,
16 Barrmill Road,
Galston,
Ayshire, KA48HH.
TEL N°. 01563 821991
FAX N°. 01563 822220
E-Mail: talk2us@handv.co.uk

CONTRACT: NSGH, ADULT & CHILDRENS HOSPITAL – PLANTROOM 122

DUCT VOLUME TEST SHEET

SYSTEM: 122 – AHU 06 SUPPLY (4TH TO 7TH FLOOR WARDS)

VELOCITY PROFILE (taken facing air flow) **TEST HOLE LOCATION: CEILING VOID**

Test Hole Ref		Duct Dia (mm)		Duct Size (mm)		Duct Area		Design Air Volume		Design Air Velocity	
				Width x Height		M2		L/S		M/S	
TH1		200				0.0314		70		2.23	
2.40	2.50										
2.50	2.40										
2.50	2.40										
2.30	2.30										
Velocity Sub Totals											
9.70	9.60										

Total Velocity	Number of Readings	Average Velocity	Measured Air Volume	% Design	Static Pressure
M/S		M/S	L/S		Pa
19.3	8	2.41	76	108	24

Remarks: Test Hole serves Level 4 503-SG006.
Test Volume = 76 l/s ÷ Balometer Volume = 72 l/s = 1.05 Factor

Instrument Used: HV01/1

Date: 18/11/14 | Engineer: Ross Parker & Daniel Kane | Sheet 5 of 14

H & V
H & V
H & V

Commissioning Services Ltd
EST: 1975

Kilknowe Office,
16 Barrmill Road,
Galston,
Ayrshire, KA48HH.
TEL N°. 01563 821991
FAX N°. 01563 822220
E-Mail: talk2us@handv.co.uk

CONTRACT: NSGH, ADULT & CHILDRENS HOSPITAL – PLANTROOM 122

GRILLE TEST SHEET

SYSTEM: 122 – AHU 06 SUPPLY (4TH TO 7TH FLOOR WARDS)

Level 4

Design Data		Initial Test Data		Final Test & Regulation Data		
Terminal or Ref No	Design Air Volume l/s	Balometer Initial Air Volume l/s	Balometer Final Air Volume l/s	Balometer Factor	Balometer Final Air Volume l/s	% Design
*SG006	70	64	72	1.05	75.60	108
*SG005	30	45	31	1.05	32.55	109
*SG004	22	27	23	1.05	24.15	110
*SG003	48	62	49	1.05	51.45	107
**SG010	20	11	20	1.05	21.00	105
**SG009	31	18	31	1.05	32.55	105
**SG008	25	17	25	1.05	26.25	105
**SG007	18	10	18	1.05	18.90	105
**SG011	46	31	44	1.05	46.20	100
**SG005	52	63	50	1.05	52.50	101
**SG006	78	64	78	1.05	81.90	105
**SG004	47	45	47	1.05	49.35	105
**SG003	49	43	50	1.05	52.50	107
**SG002	54	71	56	1.05	58.80	109
**SG001	45	41	46	1.05	48.30	107
*SG001	36	55	35	1.05	36.75	102
*SG002	20	45	20	1.05	21.00	105
***SG001	50	132	49	1.05	51.45	103
***SG002	14	31	14	1.05	14.70	105
***SG003	20	56	20	1.05	21.00	105
***SG004	34	76	33	1.05	34.65	102
***SG007	20	29	20	1.05	21.00	105
***SG005	20	46	20	1.05	21.00	105

Remarks: *Grilles prefixed with 503. **Grilles prefixed with 504. ***Grilles prefixed with 505.

Instrument Used: HV01/15

Date: 18/11/14	Engineer: Ross Parker & Daniel Kane	Sheet 6 of 14

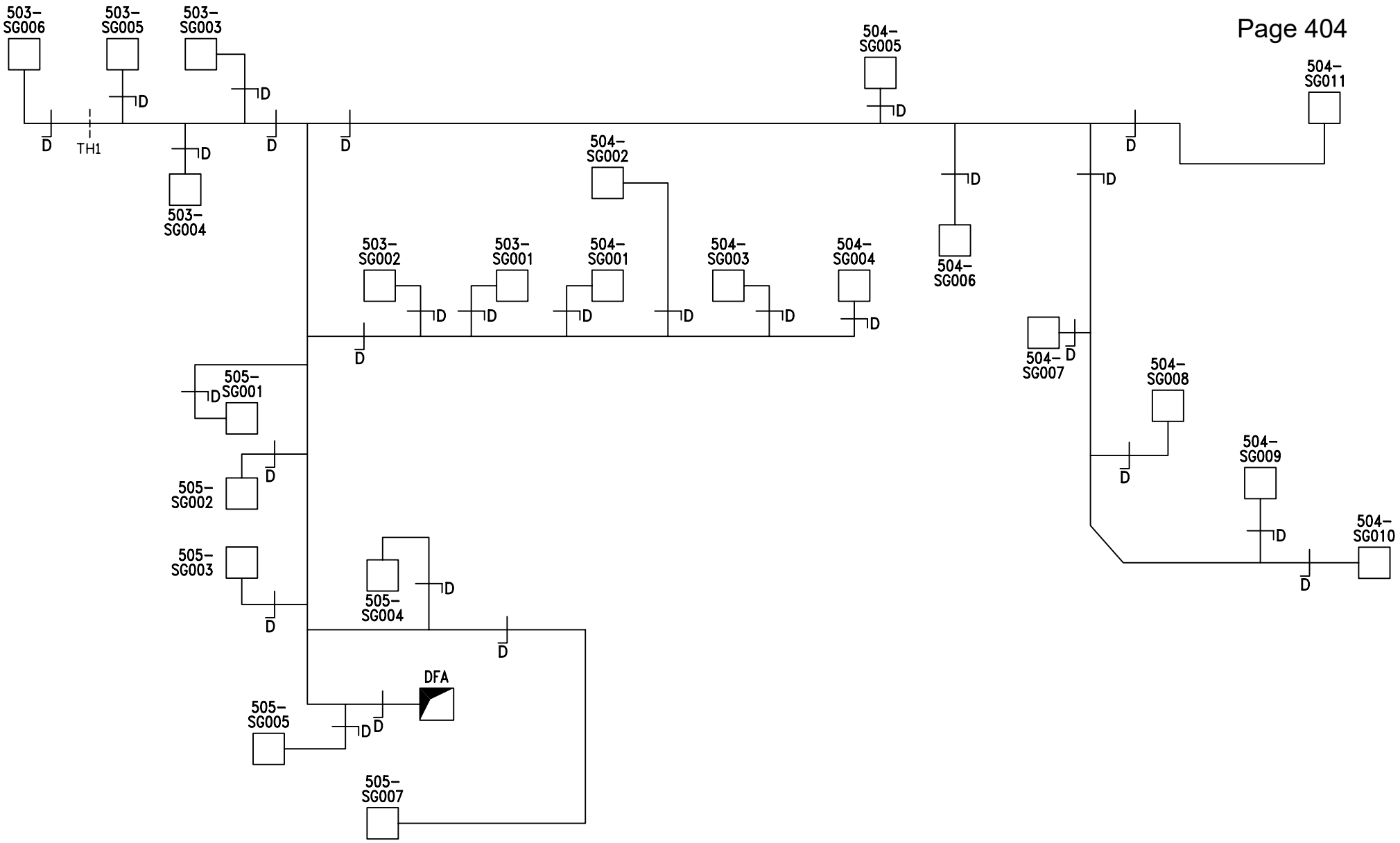

H&V Commissioning Services Limited **Kilknowe Office** **16 Barrmill Road** **Galston** **East Ayrshire, KA4 8HH** **Tel : 01563 821991** **Fax: 01563 822220** **email: talk2us@handv.co.uk**	**CONTRACT:** **NSGH, ADULT & CHILDREN'S HOSPITAL - PLANTROOM 122** **CLIENT:** **MERCURY ENGINEERING LTD.**	**TITLE:** **SCHEMATIC LAYOUT OF 122-AHU06 SUPPLY LEVEL 4 - ZONE F**	**DRAWN:** KL/DG **DATE:** 18/11/14 **DRG No.:** 5902/V02 **SHEET:** 7 OF 14

H & V
H & V
H & V

Commissioning Services Ltd

EST: 1975

Kilknowe Office,
16 Barrmill Road,
Galston,
Ayrshire, KA48HH.
TEL N°. 01563 821991
FAX N°. 01563 822220
E-Mail: talk2us@handv.co.uk

CONTRACT: NSGH, ADULT & CHILDRENS HOSPITAL – PLANTROOM 122

GRILLE TEST SHEET

SYSTEM: 122 – AHU 06 SUPPLY (4TH TO 7TH FLOOR WARDS)

Level 5

Design Data		Initial Test Data		Final Test & Regulation Data		
Terminal or Ref No	Design Air Volume l/s	Balometer Initial Air Volume l/s	Balometer Final Air Volume l/s	Balometer Factor	Balometer Final Air Volume l/s	% Design
**SG002	47	80	49	1.05	51.45	109
**SG001	49	47	51	1.05	53.55	109
*SG004	45	43	44	1.05	46.20	103
*SG003	10	18	10	1.05	10.50	105
*SG005	19	18	19	1.05	19.95	105
*SG001	50	44	50	1.05	52.50	105
*SG002	40	67	40	1.05	42.00	105
***SG002	60	111	60	1.05	63.00	105
***SG003	90	199	90	1.05	94.50	105
***SG004	20	39	20	1.05	21.00	105
**SG007	35	30	35	1.05	36.75	105
**SG006	35	36	36	1.05	37.80	108
**SG005	33	39	32	1.05	33.60	102
**SG004	25	23	26	1.05	27.30	109
**SG003	78	81	78	1.05	81.90	105
***SG001	15	21	15	1.05	15.75	105
***SG005	60	134	60	1.05	63.00	105

Remarks: *Grilles prefixed with SG03. **Grilles prefixed with 504. ***Grilles prefixed with 505.

Instrument Used: HV01/15

Date: 18/11/14	Engineer: Ross Parker & Daniel Kane	Sheet 8 of 14

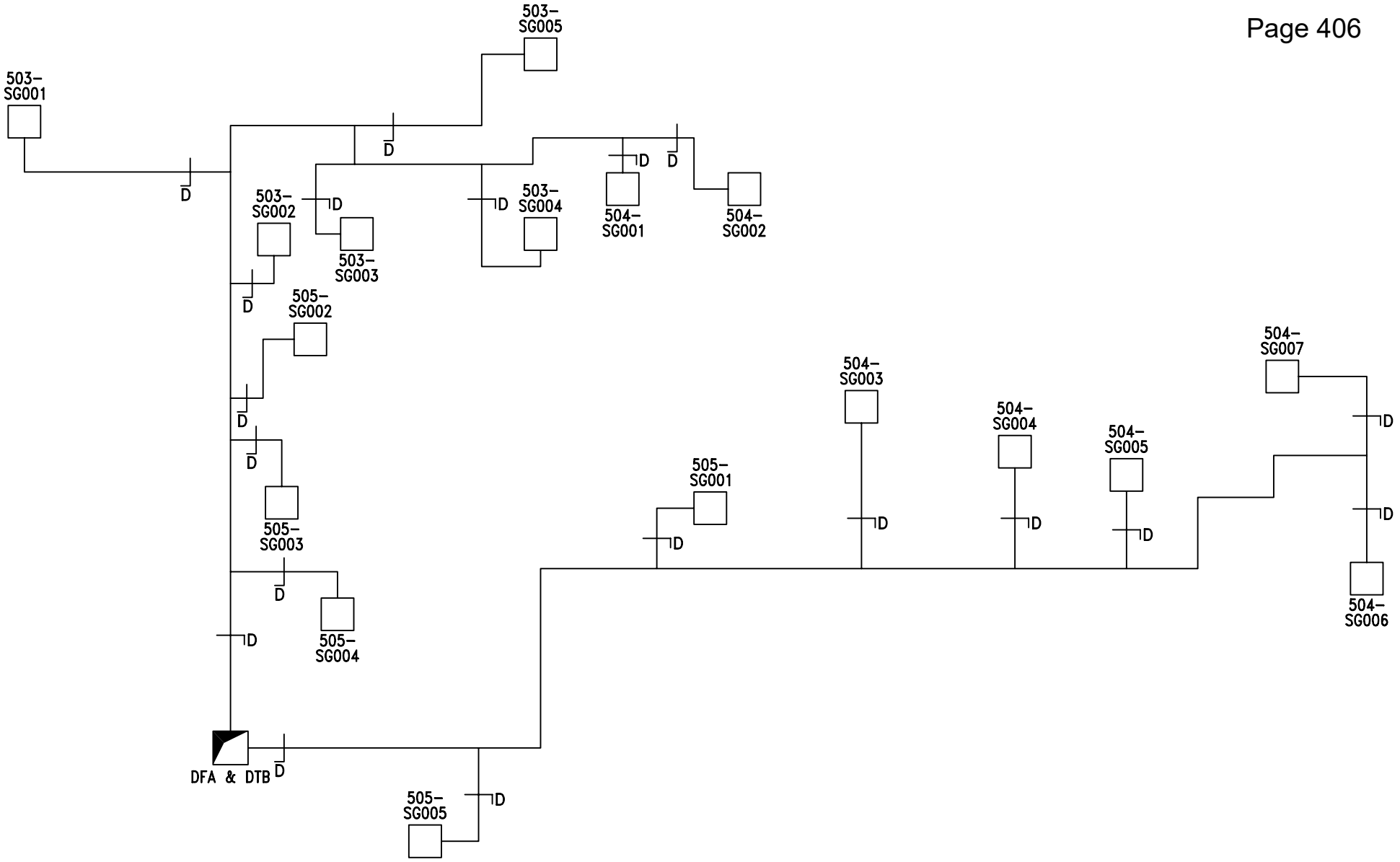

H&V Commissioning Services Limited
Kilknowe Office
16 Barrmill Road
Galston
East Ayrshire, KA4 8HH
Tel : 01563 821991
Fax: 01563 822220
email: talk2us@handv.co.uk

CONTRACT:
NSGH, ADULT & CHILDREN'S HOSPITAL - PLANTROOM 122

CLIENT:
MERCURY ENGINEERING LTD.

TITLE:
SCHEMATIC LAYOUT OF 122-AHU06 SUPPLY LEVEL 5 - ZONE F

DRAWN: KL/DG
DATE: 18/11/14
DRG No.: 5902/V03
SHEET: 9 OF 14

H & V
H & V
H & V

Commissioning Services Ltd

EST: 1975

Kilknowe Office,
16 Barrmill Road,
Galston,
Ayrshire, KA48HH.
TEL N°. 01563 821991
FAX N°. 01563 822220
E-Mail: talk2us@handv.co.uk

CONTRACT: NSGH, ADULT & CHILDRENS HOSPITAL – PLANTROOM 122

GRILLE TEST SHEET

SYSTEM: 122 – AHU 06 SUPPLY (4TH TO 7TH FLOOR WARDS)

Level 6

Design Data		Initial Test Data		Final Test & Regulation Data		
Terminal or Ref No	Design Air Volume l/s	Balometer Initial Air Volume l/s	Balometer Final Air Volume l/s	Balometer Factor	Balometer Final Air Volume l/s	% Design
*SG005	19	21	19	1.05	19.95	105
*SG002	47	75	49	1.05	51.45	109
**SG001	49	46	49	1.05	51.45	105
*SG004	45	63	45	1.05	47.25	105
*SG003	10	19	10	1.05	10.50	105
*SG007	120	117	120	1.05	126.00	105
*SG006	10	13	10	1.05	10.50	105
*SG001	50	50	50	1.05	52.50	105
*SG002	40	66	40	1.05	42.00	105
***SG002	60	129	59	1.05	61.95	103
***SG003	90	220	90	1.05	94.50	105
***SG004	20	53	20	1.05	21.00	105
**SG007	35	30	35	1.05	36.75	105
**SG006	35	34	35	1.05	36.75	105
**SG005	33	38	33	1.05	34.65	105
**SG004	25	25	25	1.05	26.25	105
**SG003	78	85	79	1.05	82.95	106
***SG001	15	17	15	1.05	15.75	105
***SG005	60	118	60	1.05	63.00	105

Remarks: *Grilles prefixed with SG03. **Grilles prefixed with 504. ***Grilles prefixed with 505.

Instrument Used: HV01/15

Date: 18/11/14	Engineer: Ross Parker & Daniel Kane	Sheet 10 of 14

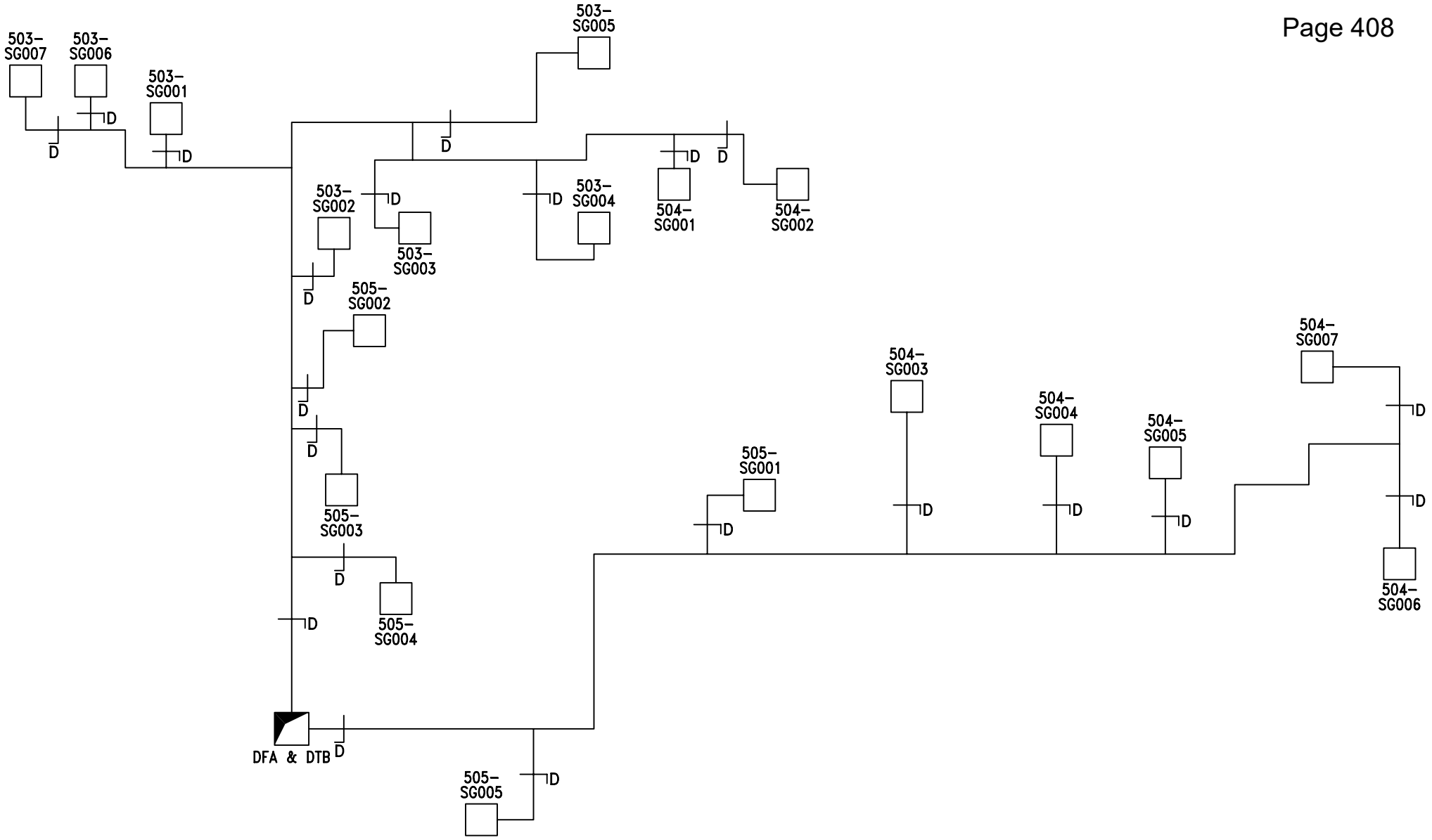

H&V Commissioning Services Limited
Kilknowe Office
16 Barrmill Road
Galston
East Ayrshire, KA4 8HH
Tel : 01563 821991
Fax: 01563 822220
email: talk2us@handv.co.uk

CONTRACT:
NSGH, ADULT & CHILDREN'S HOSPITAL - PLANTROOM 122

CLIENT:
MERCURY ENGINEERING LTD.

TITLE:
SCHEMATIC LAYOUT OF 122-AHU06 SUPPLY LEVEL 6 - ZONE F

DRAWN: KL/DG
DATE: 18/11/14
DRG No.: 5902/V04
SHEET: 11 OF 14

H & V
H & V
H & V

Commissioning Services Ltd
EST: 1975

Kilknowe Office,
16 Barrmill Road,
Galston,
Ayrshire, KA48HH.
TEL N°. 01563 821991
FAX N°. 01563 822220
E-Mail: talk2us@handv.co.uk

CONTRACT: NSGH, ADULT & CHILDRENS HOSPITAL – PLANTROOM 122

GRILLE TEST SHEET

SYSTEM: 122 – AHU 06 SUPPLY (4TH TO 7TH FLOOR WARDS)

Level 7

Design Data		Initial Test Data		Final Test & Regulation Data		
Terminal or Ref No	Design Air Volume l/s	Balometer Initial Air Volume l/s	Balometer Final Air Volume l/s	Balometer Factor	Balometer Final Air Volume l/s	% Design
**SG002	47	52	45	1.05	47.25	101
**SG001	49	45	48	1.05	50.40	103
*SG004	45	46	46	1.05	48.30	107
*SG003	10	19	10	1.05	10.50	105
*SG005	19	19	19	1.05	19.95	105
*SG001	50	51	49	1.05	51.45	103
*SG002	40	64	39	1.05	40.95	102
***SG002	60	97	60	1.05	63.00	105
***SG003	90	194	89	1.05	93.45	104
***SG004	20	35	20	1.05	21.00	105
**SG007	35	30	36	1.05	37.80	108
**SG006	35	26	35	1.05	36.75	105
**SG005	33	35	34	1.05	35.70	108
**SG004	25	21	26	1.05	27.30	109
**SG003	78	82	78	1.05	81.90	105
***SG001	15	23	15	1.05	15.75	105
***SG005	60	112	61	1.05	64.05	107

Remarks: *Grilles prefixed with SG03. **Grilles prefixed with 504. ***Grilles prefixed with 505.

Instrument Used: HV01/15

Date: 18/11/14	Engineer: Ross Parker & Daniel Kane	Sheet 12 of 14

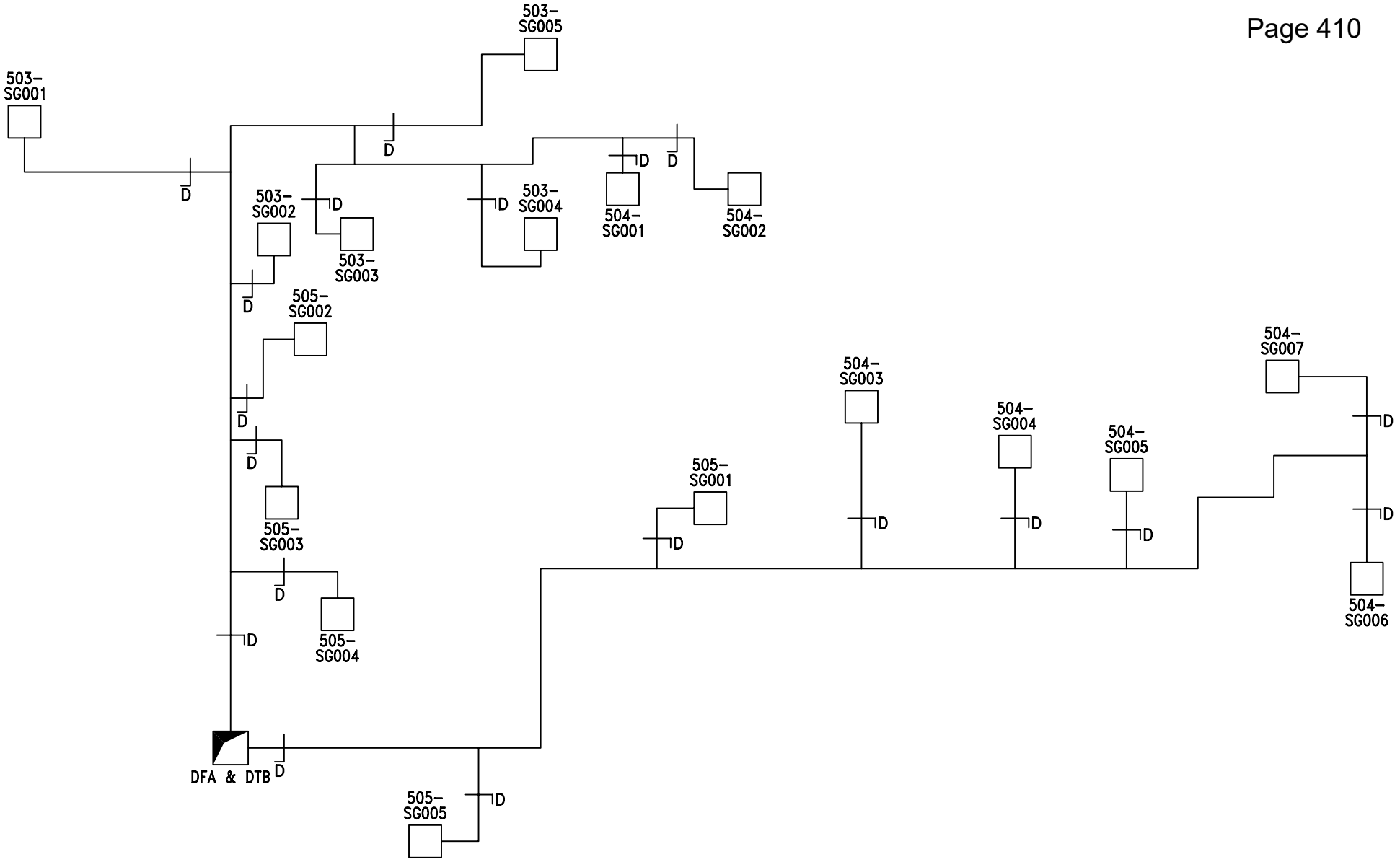

H&V Commissioning Services Limited **Kilknowe Office** **16 Barrmill Road** **Galston** **East Ayrshire, KA4 8HH** **Tel : 01563 821991** **Fax: 01563 822220** **email: talk2us@handv.co.uk**	**CONTRACT:** **NSGH, ADULT & CHILDREN'S HOSPITAL - PLANTROOM 122** **CLIENT:** **MERCURY ENGINEERING LTD.**	**TITLE:** **SCHEMATIC LAYOUT OF 122-AHU06 SUPPLY LEVEL 7 - ZONE F**	**DRAWN:** KL/DG **DATE:** 18/11/14 **DRG No.:** 5902/V05 **SHEET:** 13 OF 14

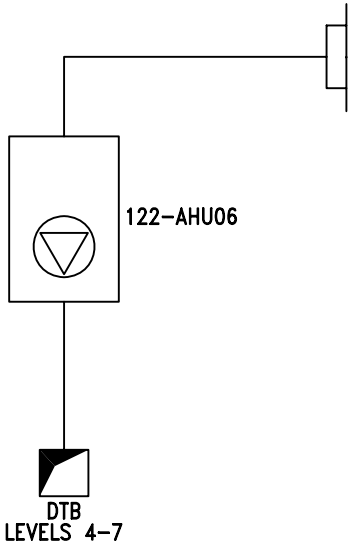

H&V Commissioning Services Limited
Kilknowe Office
16 Barrmill Road
Galston
East Ayrshire, KA4 8HH
Tel : 01563 821991
Fax: 01563 822220
email: talk2us@handv.co.uk

CONTRACT:
NSGH, ADULT & CHILDREN'S HOSPITAL - PLANTROOM 122

CLIENT:
MERCURY ENGINEERING LTD.

TITLE:
SCHEMATIC LAYOUT OF 122-AHU06 SUPPLY PLANTROOM 122 - LEVEL 12

DRAWN: KL/DG

DATE: 18/11/14

DRG No.: 5902/V01

SHEET: 14 OF 14

H & V
H & V
H & V

Commissioning Services Ltd
EST: 1975

Kilknowe Office,
16 Barrmill Road,
Galston,
Ayrshire, KA48HH.
TEL N°. 01563 821991
FAX N°. 01563 822220
E-Mail: talk2us@handv.co.uk

CONTRACT: NSGH, ADULT & CHILDRENS HOSPITAL – PLANTROOM 122

SYSTEM: 122 – AHU 06 CLEAN EXTRACT (4TH TO 7TH FLOOR WARDS)

WITNESSING OF TESTING AND BALANCING

	Client Representative / Commissioning Manager	Client
Witnessed By:	David Wilson	
Representing:	Brookfield Multiplex	
Signature:	[redacted]	
Date:	27/11/14	
Witnessed By:		
Representing:		
Signature:		
Date:		

Remarks:

H & V
H & V
H & V

Commissioning Services Ltd
EST: 1975

Kilknowe Office,
16 Barrmill Road,
Galston,
Ayrshire, KA48HH.
TEL N°. 01563 821991
FAX N°. 01563 822220
E-Mail: talk2us@handv.co.uk

CONTRACT: NSGH, ADULT & CHILDRENS HOSPITAL – PLANTROOM 122

SYSTEM: 122 – AHU 06 CLEAN EXTRACT (4TH TO 7TH FLOOR)

	AIR SYSTEMS PRE COMMISSIONING SHEET	✓	X	N/A
1.	Check AHU for damage and that all the components are secure	✓		
2.	Check the transit straps have been removed, if applicable	✓		
3.	Check pulleys are secure, tight, aligned and belts are correctly tensioned, if applicable	✓		
4.	Check with the controls engineer that the system is available to run and that plant rotation is correct	✓		
5.	Check all ductwork/air terminals are fitted and that air regulating dampers are open	✓		
6.	Check louvres are fitted and clear from obstructions, if applicable	✓		
7.	Check fire dampers are open, if applicable	✓		
8.	Check the motor overloads are suitable and set			✓
9.	Check VAV or CAV boxes are installed correctly and ready for use.			✓
10.	Check the floor plenums are complete, if applicable			✓
11.	Complete commissioning test sheets.	✓		

COMMENTS

H & V
H & V
H & V

Commissioning Services Ltd

EST: 1975

Kilknowe Office,
16 Barrmill Road,
Galston,
Ayshire, KA48HH.
TEL N°. 01563 821991
FAX N°. 01563 822220
E-Mail: talk2us@handv.co.uk

CONTRACT: NSGH, ADULT & CHILDRENS HOSPITAL – PLANTROOM 122

AHU TEST SHEET

SYSTEM: 122 – AHU 06 CLEAN EXTRACT (4TH TO 7TH FLOOR)

AHU										
AHU Manufacturer			Barkell		Fan Size			400		
Fan Manufacturer			Comefri		AHU Serial No			OP1B3059360		
Fan Type			Centrifugal		AHU Model N°.			TZAF400RFF		
			Design			**Test**			**% Design**	
Air Volume	(L/S)		2208			2405			109	
External Static Pressure	(Pa)		435		Inlet	215	Outlet	27	Total	242
Fan Rotational Speed	(R.P.M)		1800			1620				
Filter Test Data	Pre Filter	(Pa)	Inlet	*	Outlet	*			ΔP	*30
	Sec Filter	(Pa)	Inlet	N/A	Outlet	N/A			ΔP	N/A

MOTOR				
Manufacturer	TEC	Output kW	3.0	
Serial N°	1306-1197634	Motor Full Load Current	6.52	Amps
Voltage	400	Motor Running Current	4.7	Amps
	Design	**Test**		
Rotational Speed.	1440	1296		

DRIVE DETAILS				
Motor Pulley/Shaft Size (mm∅)	SPZ 140	28	Motor Pulley Taper Lock Size	1610
Fan Pulley/Shaft Size (mm∅)	SPZ 112	40	Fan Pulley Taper Lock Size	1610
Belt Type/Size	XPZ	980	N°. Of Belts	2
Shaft Centres mm	285		Adjustment	- 30 + 30 mm
Variable Speed Drive	Yes		Set Point	45Hz

STANDBY PLANT							
Test Air Volume	2405	Inlet Pressure	220	Motor Rotational Speed	1570	Motor Running Current	
% Design	109	Outlet Pressure	26	Fan Rotational Speed	1962	4.7	Amps
Variable Speed Drive			Yes	Set Point	45Hz		

Comments. N/A – Not Applicable

2nd Motor Serial Number – 1306-1197635.

*Filter pressure taken from magnehelic gauge.

Instrument Used (Ref N°.) HV03/1, HV03/4 & HV06/5

Date: 12/11/14	Engineer: Ross Parker & Daniel Kane	Sheet 3 of 14

H & V
H & V
H & V

Commissioning Services Ltd
EST: 1975

Kilknowe Office,
16 Barrmill Road,
Galston,
Ayshire, KA48HH.
TEL N°. 01563 821991
FAX N°. 01563 822220
E-Mail: talk2us@handv.co.uk

CONTRACT: NSGH, ADULT & CHILDRENS HOSPITAL – PLANTROOM 122

DUCT VOLUME TEST SHEET

SYSTEM: 122 – AHU 06 CLEAN EXTRACT (4TH TO 7TH FLOOR)

VELOCITY PROFILE (taken facing air flow) **TEST HOLE LOCATION: LEVEL 8 RISER**

Test Hole Ref		Duct Dia (mm)		Duct Size (mm)		Duct Area		Design Air Volume		Design Air Velocity	
				Width x Height		M2		L/S		M/S	
Main TH				750	750	0.5625		2208		3.93	
3.50	4.20	4.40	4.60	4.00							
3.60	3.60	4.30	4.60	4.50							
3.60	4.20	4.50	4.70	4.40							
4.20	4.50	4.70	4.80	4.60							

Velocity Sub Totals

14.90	16.50	17.90	18.70	17.50							

Total Velocity	Number of Readings	Average Velocity	Measured Air Volume	% Design	Static Pressure
M/S		M/S	L/S		Pa
85.5	20	4.28	2405	109	147

Remarks:

Instrument Used: HV03/1

Date: 12/11/14 | Engineer: Ross Parker & Daniel Kane | Sheet 4 of 14

H & V
H & V
H & V

Commissioning Services Ltd
EST: 1975

Kilknowe Office,
16 Barrmill Road,
Galston,
Ayshire, KA48HH.
TEL N°. 01563 821991
FAX N°. 01563 822220
E-Mail: talk2us@handv.co.uk

CONTRACT: NSGH, ADULT & CHILDRENS HOSPITAL – PLANTROOM 122

DUCT VOLUME TEST SHEET

SYSTEM: 122 – AHU 06 CLEAN EXTRACT (4TH TO 7TH FLOOR)

VELOCITY PROFILE (taken facing air flow) **TEST HOLE LOCATION: CEILING VOID**

Test Hole Ref		Duct Dia (mm)		Duct Size (mm)		Duct Area		Design Air Volume		Design Air Velocity	
				Width x Height		M2		L/S		M/S	
TH1		200				0.0314		65		2.07	
2.00	2.20										
2.00	2.10										
2.20	2.20										
2.20	2.10										
Velocity Sub Totals											
8.40	8.60										

Total Velocity	Number of Readings	Average Velocity	Measured Air Volume	% Design	Static Pressure
M/S		M/S	L/S		Pa
17	8	2.13	66.8	103	16

Remarks: Test Hole serves Level 4 504-EG007, taken to obtain balometer factor.
Test Volume = 67 l/s ÷ Balometer Volume = 57 l/s = 1.18 Factor

Instrument Used: HV03/1

Date: 12/11/14 | Engineer: Ross Parker & Daniel Kane | Sheet 5 of 14

H & V
H & V
H & V

Commissioning Services Ltd
EST: 1975

Kilknowe Office,
16 Barrmill Road,
Galston,
Ayrshire, KA48HH.
TEL N°. 01563 821991
FAX N°. 01563 822220
E-Mail: talk2us@handv.co.uk

CONTRACT: NSGH, ADULT & CHILDRENS HOSPITAL – PLANTROOM 122

GRILLE TEST SHEET

SYSTEM: 122 – AHU 06 CLEAN EXTRACT (4TH TO 7TH FLOOR)

Level 4

Design Data		Initial Test Data		Final Test & Regulation Data		
Terminal or Ref No	Design Air Volume l/s	Balometer Initial Air Volume l/s	Balometer Final Air Volume l/s	Balometer Factor	Balometer Final Air Volume l/s	% Design
*EG007	70	34	60	1.18	70.80	101
*EG006	30	24	27	1.18	31.86	106
*EG005	45	34	39	1.18	46.02	102
*EG004	45	39	39	1.18	46.02	102
**SG008	45	26	39	1.18	46.02	102
**EG007	65	36	57	1.18	67.26	103
**EG006	45	36	40	1.18	47.20	105
**EG005	45	40	40	1.18	47.20	105
**EG004	45	36	40	1.18	47.20	105
*EG002	45	45	40	1.18	47.20	105
*EG003	45	45	40	1.18	47.20	105
**SG003	54	70	46	1.18	54.28	101
*SG001	43	49	37	1.18	43.66	102
***EG003	75	104	69	1.18	81.42	109
***EG004	50	128	45	1.18	53.10	106
***EG005	74	129	65	1.18	76.70	104
***EG006	20	54	18	1.18	21.24	106
***EG007	20	31	18	1.18	21.24	106

Remarks: *Grilles prefixed with 503. **Grilles prefixed with 504. ***Grilles prefixed with 505.

Instrument Used: HV01/15

Date: 12/11/14	Engineer: Ross Parker & Daniel Kane	Sheet 6 of 14

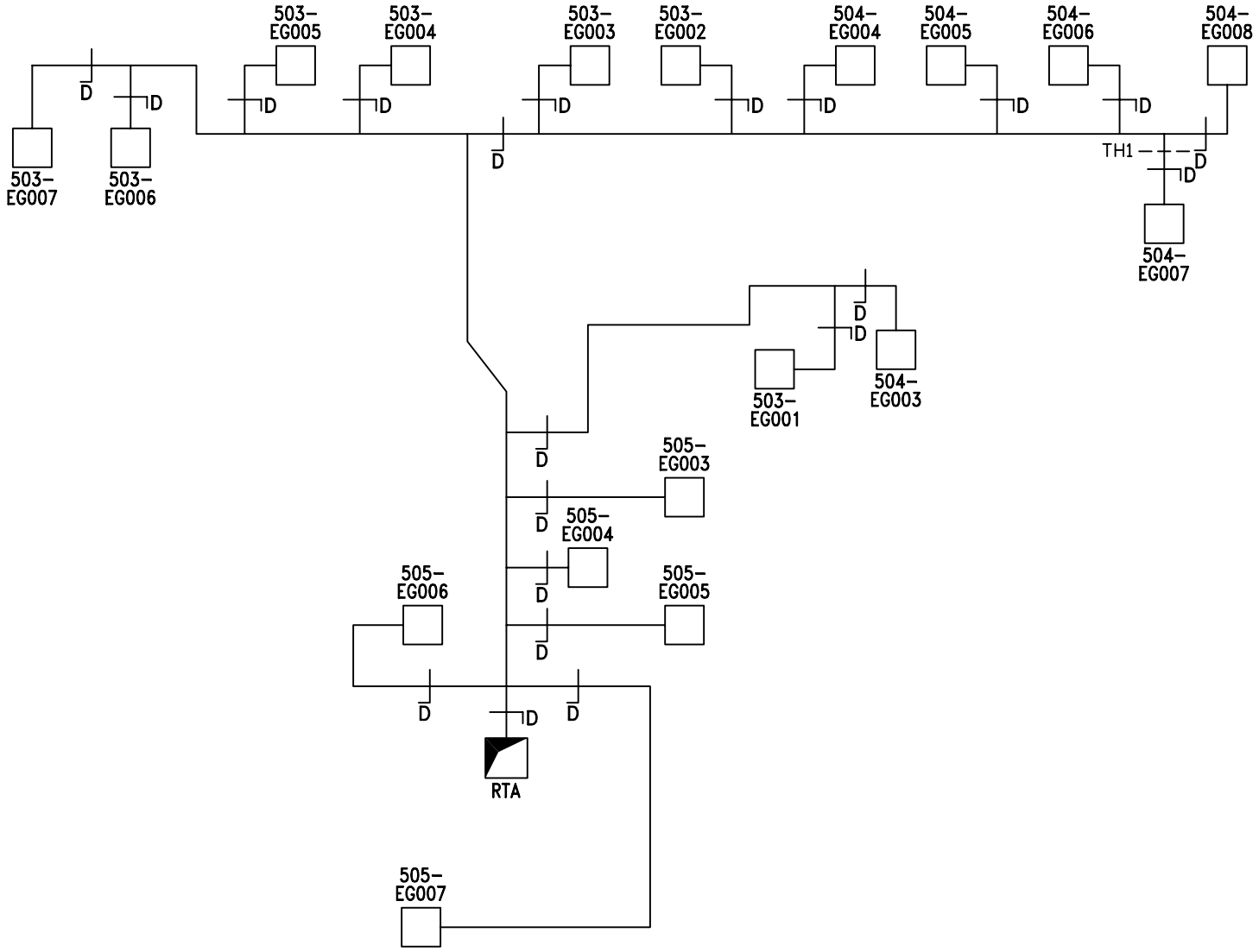

H&V Commissioning Services Limited **Kilknowe Office** **16 Barrmill Road** **Galston** **East Ayrshire, KA4 8HH** **Tel : 01563 821991** **Fax: 01563 822220** **email: talk2us@handv.co.uk**	**CONTRACT:** **NSGH, ADULT & CHILDREN'S HOSPITAL - PLANTROOM 122** **CLIENT:** **MERCURY ENGINEERING LTD.**	**TITLE:** **SCHEMATIC LAYOUT OF 122-AHU06 EXTRACT LEVEL 4 - ZONE F**	**DRAWN:** KL/DG **DATE:** 18/11/14 **DRG No.:** 5902/V07 **SHEET:** 7 OF 14

04/12/2020

H & V
H & V
H & V

Commissioning Services Ltd

EST: 1975

Kilknowe Office,
16 Barrmill Road,
Galston,
Ayrshire, KA48HH.
TEL N°. 01563 821991
FAX N°. 01563 822220
E-Mail: talk2us@handv.co.uk

CONTRACT: NSGH, ADULT & CHILDRENS HOSPITAL – PLANTROOM 122

GRILLE TEST SHEET

SYSTEM: 122 – AHU 06 CLEAN EXTRACT (4TH TO 7TH FLOOR)

Level 5

Design Data		Initial Test Data		Final Test & Regulation Data		
Terminal or Ref No	Design Air Volume l/s	Balometer Initial Air Volume l/s	Balometer Final Air Volume l/s	Balometer Factor	Balometer Final Air Volume l/s	% Design
**EG002	150	111	130	1.18	153.40	102
**EG001	65	69	56	1.18	66.08	102
*EG001	54	85	50	1.18	59.00	109
***EG001	60	93	52	1.18	61.36	102
***EG002	90	171	78	1.18	92.04	102
***EG004	10	10	9	1.18	10.62	106
***EG003	20	48	18	1.18	21.24	106

Remarks:*Grilles prefixed with 503. **Grilles prefixed with 504. ***Grilles prefixed with 505.

Instrument Used: HV01/15

Date: 12/11/14	Engineer: Ross Parker & Daniel Kane	Sheet 8 of 14

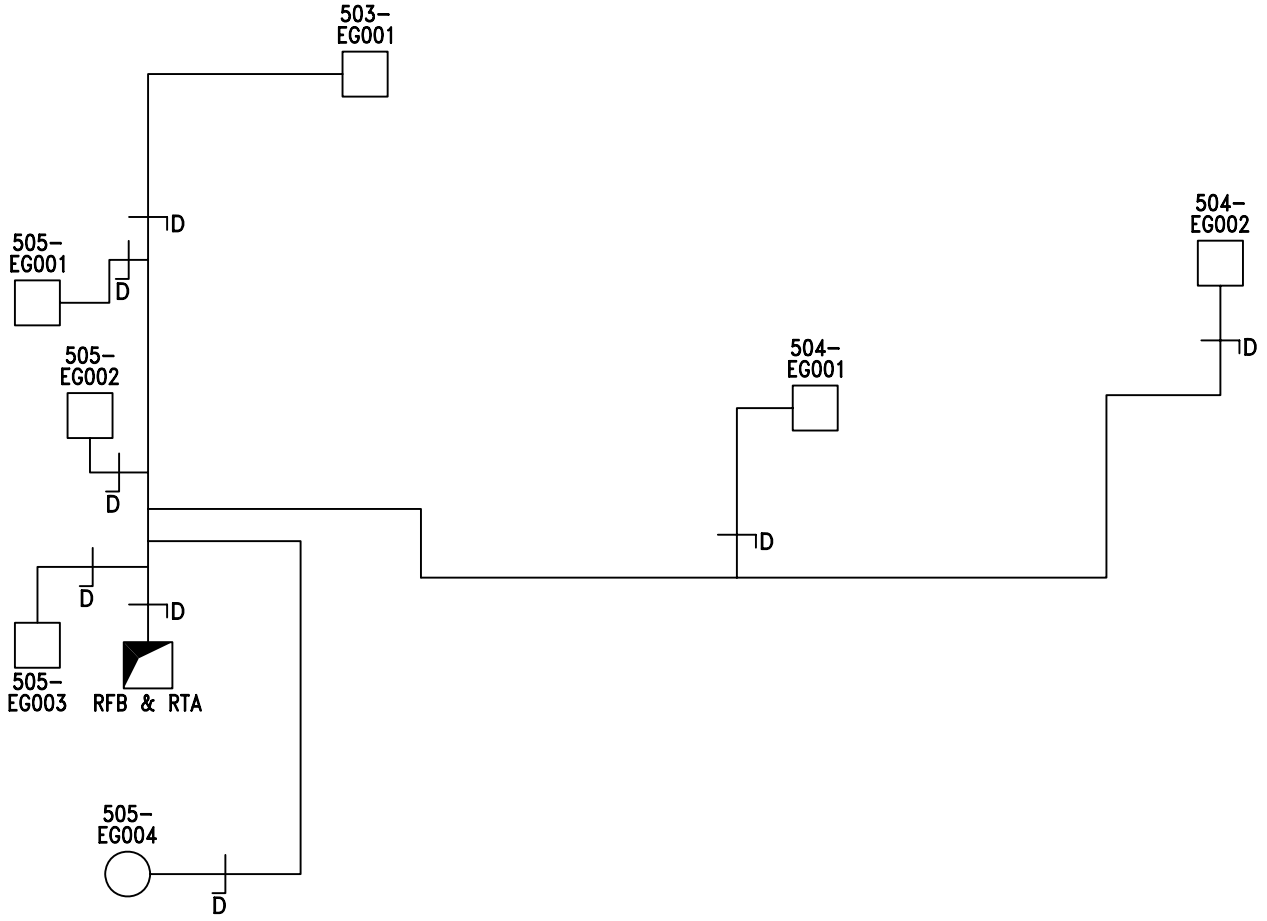

H&V Commissioning Services Limited
Kilknowe Office
16 Barrmill Road
Galston
East Ayrshire, KA4 8HH
Tel : 01563 821991
Fax: 01563 822220
email: talk2us@handv.co.uk

CONTRACT:
NSGH, ADULT & CHILDREN'S HOSPITAL - PLANTROOM 122

CLIENT:
MERCURY ENGINEERING LTD.

TITLE:
SCHEMATIC LAYOUT OF 122-AHU06 EXTRACT LEVEL 5 - ZONE F

DRAWN: KL/DG

DATE: 18/11/14

DRG No.: 5902/V08

SHEET: 9 OF 14

H & V
H & V
H & V

Commissioning Services Ltd
EST: 1975

Kilknowe Office,
16 Barrmill Road,
Galston,
Ayrshire, KA48HH.
TEL N°. 01563 821991
FAX N°. 01563 822220
E-Mail: talk2us@handv.co.uk

CONTRACT: NSGH, ADULT & CHILDRENS HOSPITAL – PLANTROOM 122

GRILLE TEST SHEET

SYSTEM: 122 – AHU 06 CLEAN EXTRACT (4TH TO 7TH FLOOR)

Level 6

Design Data		Initial Test Data		Final Test & Regulation Data		
Terminal or Ref No	Design Air Volume l/s	Balometer Initial Air Volume l/s	Balometer Final Air Volume l/s	Balometer Factor	Balometer Final Air Volume l/s	% Design
*EG001	54	67	49	1.18	57.82	107
***EG001	60	62	55	1.18	64.90	108
***EG002	90	180	78	1.18	92.04	102
**EG002	150	109	131	1.18	154.58	103
**EG001	65	68	57	1.18	67.26	103
***EG003	20	49	18	1.18	21.24	106
***EG004	10	0	9	1.18	10.62	106

Remarks: *Grilles prefixed with 503. **Grilles prefixed with 504. ***Grilles prefixed with 505.

Instrument Used: HV01/15

Date: 12/11/14	Engineer: Ross Parker & Daniel Kane	Sheet 10 of 14

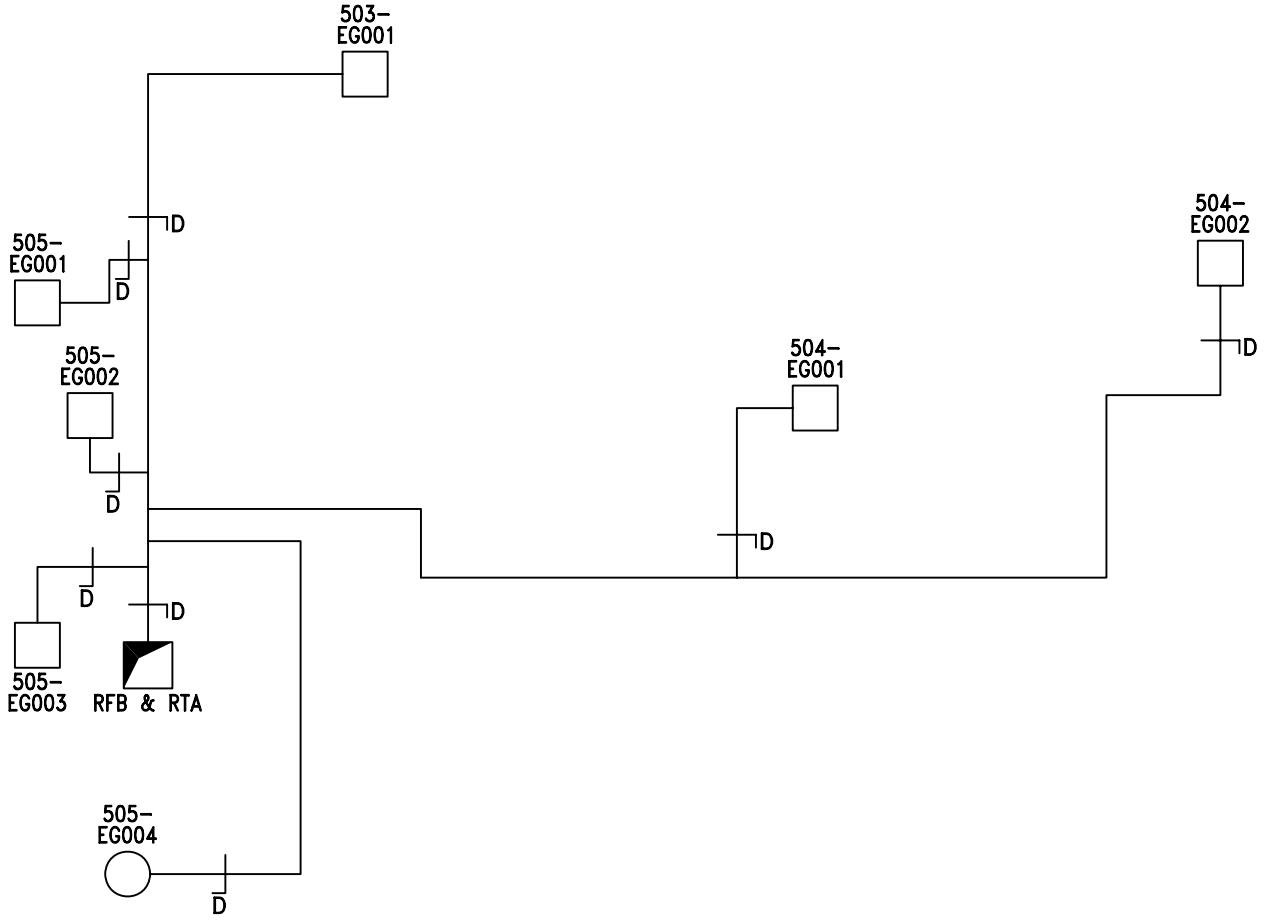

H&V Commissioning Services Limited
Kilknowe Office
16 Barrmill Road
Galston
East Ayrshire, KA4 8HH
Tel : 01563 821991
Fax: 01563 822220
email: talk2us@handv.co.uk

CONTRACT:	NSGH, ADULT & CHILDREN'S HOSPITAL - PLANTROOM 122
CLIENT:	MERCURY ENGINEERING LTD.
TITLE:	SCHEMATIC LAYOUT OF 122-AHU06 EXTRACT LEVEL 6 - ZONE F
DRAWN:	KL/DG
DATE:	18/11/14
DRG No.:	5902/V09
SHEET:	11 OF 14

H & V
H & V
H & V

Commissioning Services Ltd
EST: 1975

Kilknowe Office,
16 Barrmill Road,
Galston,
Ayrshire, KA48HH.
TEL N°. 01563 821991
FAX N°. 01563 822220
E-Mail: talk2us@handv.co.uk

CONTRACT: NSGH, ADULT & CHILDRENS HOSPITAL – PLANTROOM 122

GRILLE TEST SHEET

SYSTEM: 122 – AHU 06 CLEAN EXTRACT (4TH TO 7TH FLOOR)

Level 7

Design Data		Initial Test Data		Final Test & Regulation Data		
Terminal or Ref No	Design Air Volume l/s	Balometer Initial Air Volume l/s	Balometer Final Air Volume l/s	Balometer Factor	Balometer Final Air Volume l/s	% Design
**EG002	150	89	133	1.18	156.94	105
**EG001	65	60	60	1.18	70.80	109
*EG001	54	81	50	1.18	59.00	109
***EG001	60	77	55	1.18	64.90	108
***EG002	90	135	80	1.18	94.40	105
***EG004	10	0	9	1.18	10.62	106
***EG003	20	35	17	1.18	20.06	100

Remarks: *Grilles prefixed with 503. **Grilles prefixed with 504. ***Grilles prefixed with 505.

Instrument Used: HV01/15

Date: 12/11/14	Engineer: Ross Parker & Daniel Kane	Sheet 12 of 14

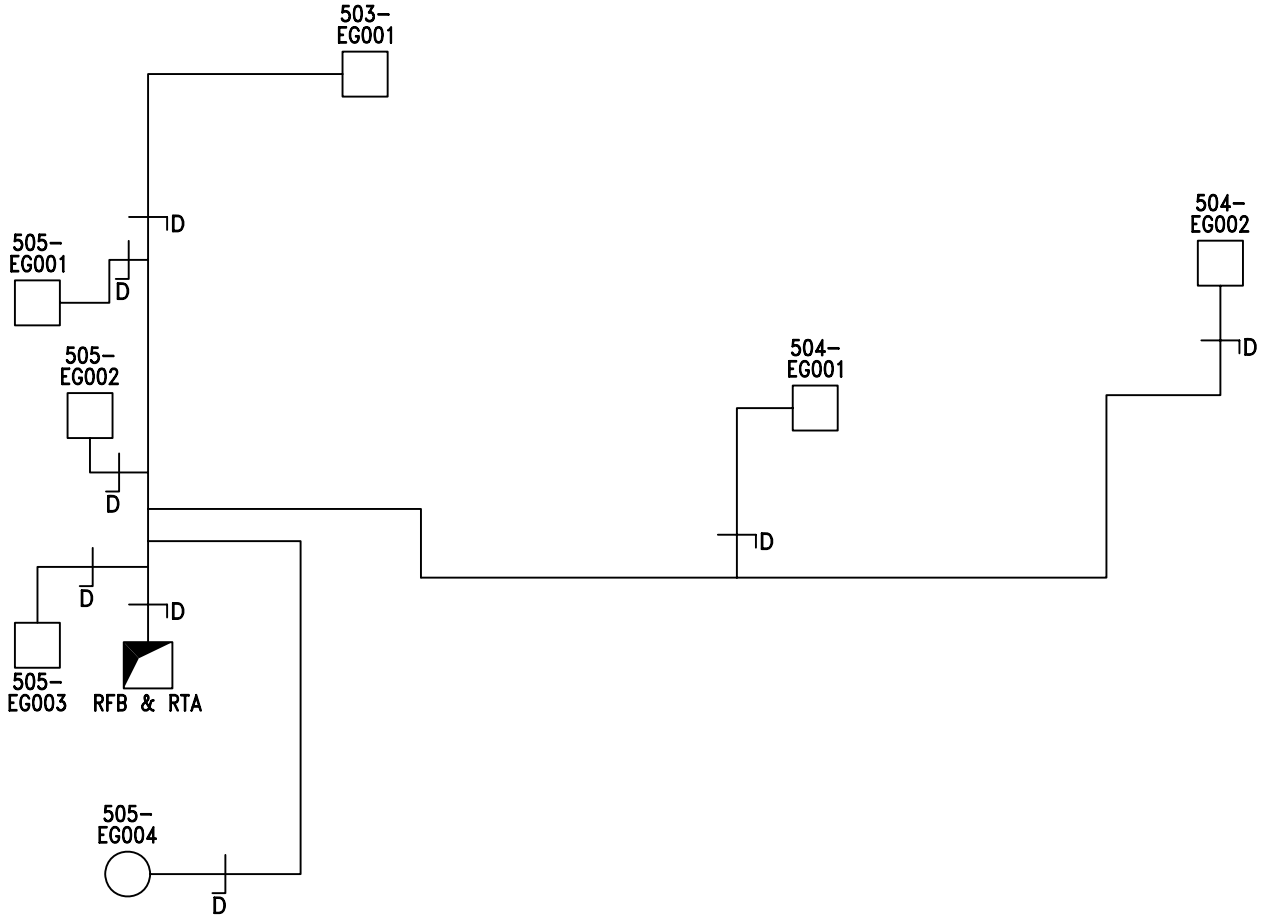

H&V Commissioning Services Limited
Kilknowe Office
16 Barrmill Road
Galston
East Ayrshire, KA4 8HH
Tel : 01563 821991
Fax: 01563 822220
email: talk2us@handv.co.uk

CONTRACT:
NSGH, ADULT & CHILDREN'S HOSPITAL - PLANTROOM 122

CLIENT:
MERCURY ENGINEERING LTD.

TITLE:
SCHEMATIC LAYOUT OF 122-AHU06 EXTRACT LEVEL 7 - ZONE F

DRAWN: KL/DG
DATE: 18/11/14
DRG No.: 5902/V10
SHEET: 13 OF 14

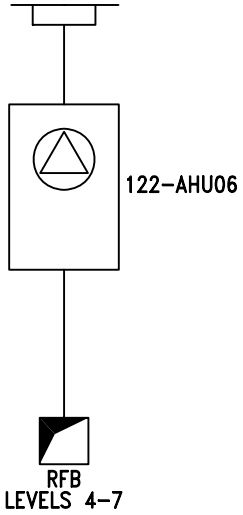

H&V Commissioning Services Limited
Kilknowe Office
16 Barrmill Road
Galston
East Ayrshire, KA4 8HH
Tel : 01563 821991
Fax: 01563 822220
email: talk2us@handv.co.uk

CONTRACT:
NSGH, ADULT & CHILDREN'S HOSPITAL - PLANTROOM 122

CLIENT:
MERCURY ENGINEERING LTD.

TITLE:
SCHEMATIC LAYOUT OF 122-AHU06 EXTRACT PLANTROOM 122 - LEVEL 12

DRAWN: KL/DG

DATE: 18/11/14

DRG No.: 5902/V06

SHEET: 14 OF 14

	Client Representative / Commissioning Manager	Client
Witnessed By:		
Representing:	Brookfield Multiplex	
Signature:		
Date:		
Witnessed By:		
Representing:		
Signature:		
Date:		

Remarks:

	AIR SYSTEMS PRE COMMISSIONING SHEET	✓	X	N/A
1.	Check AHU for damage and that all the components are secure	✓		
2.	Check the transit straps have been removed, if applicable	✓		
3.	Check pulleys are secure, tight, aligned and belts are correctly tensioned, if applicable	✓		
4.	Check with the controls engineer that the system is available to run and that plant rotation is correct	✓		
5.	Check all ductwork/air terminals are fitted and that air regulating dampers are open	✓		
6.	Check louvres are fitted and clear from obstructions, if applicable	✓		
7.	Check fire dampers are open, if applicable	✓		
8.	Check the motor overloads are suitable and set			✓
9.	Check VAV or CAV boxes are installed correctly and ready for use.			✓
10.	Check the floor plenums are complete, if applicable			✓
11.	Complete commissioning test sheets.	✓		

COMMENTS

AHU											
AHU Manufacturer			Barkell		Fan Size			355			
Fan Manufacturer			Comefri		AHU Serial No			OPIB3058027			
Fan Type			Centrifugal		AHU Model Nº.			TZAF 355 RFF			
			Design		**Test**					**% Design**	
Air Volume		(L/S)	1800		1971					109	
External Static Pressure		(Pa)	450		Inlet	64	Outlet	335	Total	399	
Fan Rotational Speed		(R.P.M)	3000		2880						
Filter Test Data	Pre Filter	(Pa)	Inlet	*	Outlet	*			ΔP	*60	
	Sec Filter	(Pa)	Inlet	*	Outlet	*			ΔP	*100	
MOTOR											
Manufacturer			TEC		Output kW			3.0			
Serial Nº			1305-0265052		Motor Full Load Current			6.52	Amps		
Voltage			400		Motor Running Current			5.12	Amps		
			Design		**Test**						
Rotational Speed.			1440		1382						
DRIVE DETAILS											
Motor Pulley/Shaft Size		(mm∅)	SPZ 170	28	Motor Pulley Taper Lock Size			1610			
Fan Pulley/Shaft Size		(mm∅)	SPZ 112	35	Fan Pulley Taper Lock Size			1610			
Belt Type/Size			XPZ	1000	Nº. Of Belts			2			
Shaft Centres mm			280		Adjustment			-	30	+	28 mm
Variable Speed Drive			Yes		Set Point			48 Hz			
STANDBY PLANT											
Test Air Volume	1971	Inlet Pressure	64	Motor Rotational Speed	1382	Motor Running Current					
% Design	109	Outlet Pressure	335	Fan Rotational Speed	2880	5.12 Amps					
Variable Speed Drive			Yes	Set Point	48 Hz						

Comments.

N/A – Not Applicable

2nd Motor Serial Number: 1305-0265048

*Filter pressure taken from magnehelic gauges.

Control Static Pressure Sensor = 329Pa

Instrument Used (Ref Nº.) HV12/1, HV12/4 & HV12/5

Date: 22/9/14	Engineer: Stephen Murdoch & Gregor Fulton	Sheet 3 of 13

VELOCITY PROFILE (taken facing air flow) **TEST HOLE LOCATION: PLANTROOM 121**

Test Hole Ref		Duct Dia (mm)		Duct Size (mm)		Duct Area		Design Air Volume		Design Air Velocity	
				Width x Height		M2		L/S		M/S	
Main TH				900	500	0.4500		1800		4.00	
4.90	4.90	5.00	5.00	4.80	4.30						
4.70	4.70	4.60	4.40	4.40	4.90						
4.50	4.10	4.10	3.90	4.00	4.60						
3.90	3.60	3.80	3.60	4.00	4.40						
Velocity Sub Totals											
18.00	17.30	17.50	16.90	17.20	18.20						

Total Velocity	Number of Readings	Average Velocity	Measured Air Volume	% Design	Static Pressure
M/S		M/S	L/S		Pa
105.1	24	4.38	1971	109	174

Remarks:

Instrument Used: HV12/1

Date: 22/9/14 Engineer: Stephen Murdoch & Gregor Fulton Sheet 4 of 13

VELOCITY PROFILE (taken facing air flow)

TEST HOLE LOCATION: CEILING VOID

Test Hole Ref		Duct Dia (mm)		Duct Size (mm)		Duct Area		Design Air Volume		Design Air Velocity	
				Width x Height		M2		L/S		M/S	
TH1		160				0.0201		40		1.99	
2.00	2.00										
2.30	2.30										
2.30	2.20										
2.20	1.80										
Velocity Sub Totals											
8.80	8.30										

Total Velocity	Number of Readings	Average Velocity	Measured Air Volume	% Design	Static Pressure
M/S		M/S	L/S		Pa
17.1	8	2.14	43	107	79

Remarks: Test hole serves CB/W1/L3/2

Instrument Used: HV12/1

Date: 22/9/14 | Engineer: Stephen Murdoch & Gregor Fulton | Sheet 5 of 13

VELOCITY PROFILE (taken facing air flow) **TEST HOLE LOCATION: CEILING VOID**

Test Hole Ref		Duct Dia (mm)		Duct Size (mm)		Duct Area		Design Air Volume		Design Air Velocity	
				Width x Height		M2		L/S		M/S	
TH2		160				0.0201		40		1.99	
2.20	2.20										
2.20	2.20										
1.90	2.10										
2.10	2.10										
Velocity Sub Totals											
8.40	8.60										

Total Velocity	Number of Readings	Average Velocity	Measured Air Volume	% Design	Static Pressure
M/S		M/S	L/S		Pa
17	8	2.13	43	107	118

Remarks: Test hole serves CB/W1/L1/5

Instrument Used: HV12/1

Date: 22/9/14 Engineer: Stephen Murdoch & Gregor Fulton Sheet 6 of 13

PLANTROOM 121 LEVEL 12

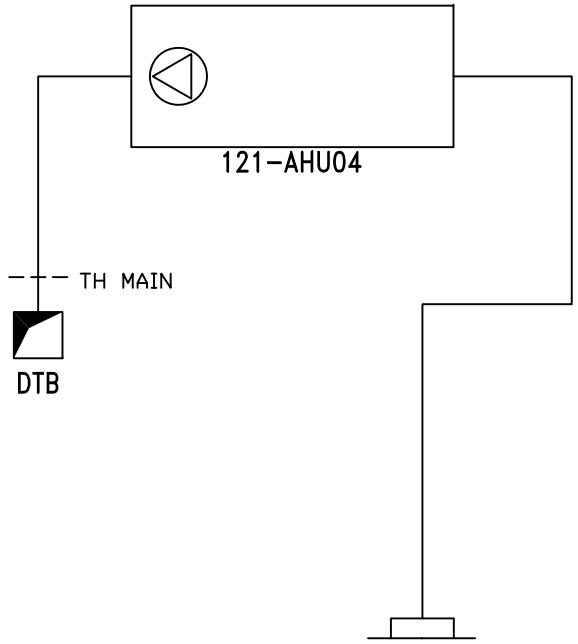

H&V Commissioning Services Limited
Kilknowe Office
16 Barrmill Road
Galston
East Ayrshire, KA4 8HH
Tel : 01563 821991
Fax: 01563 822220
email: talk2us@handv.co.uk

CONTRACT:	**NSGH, ADULT & CHILDREN'S HOSPITAL - PLANTROOM 121**
CLIENT:	**MERCURY ENGINEERING LTD.**
TITLE:	**SCHEMATIC LAYOUT OF 121-AHU04 SUPPLY (5TH - 7TH FLOOR WARDS) LEVEL 12**
DRAWN:	**LH/SM**
DATE:	**17/07/15**
DRG No.:	**5902/V59**
SHEET:	**7 OF 13**

Chilled Beam Data			Design Data		Test Data			
No.	**Size (mm)**	**Setting**	**Volume (l/s)**	**Pressure (Pa)**	**Initial Pressure (Pa)**	**Final Pressure (Pa)**	**Final Volume (l/s)**	**% Design**
LEVEL 7								
CB/W1/L3/1	N/A	N/A	40	63.0	54	63	40.0	100
CB/W1/L1/1	N/A	N/A	40	51.8	58	53	40.5	101
CB/W1/L1/2	N/A	N/A	40	51.8	57	52	40.1	100
CB/W1/L1/3	N/A	N/A	40	51.8	56	52	40.1	100
CB/W1/L1/4	N/A	N/A	40	51.8	60	52	40.1	100
CB/W1/L3/2	N/A	N/A	40	63.0	36	63	40.0	100
CB/W1/L3/3	N/A	N/A	40	63.0	38	66	40.9	102
CB/W1/L3/4	N/A	N/A	40	63.0	36	63	40.0	100
CB/W1/L3/5	N/A	N/A	40	63.0	40	63	40.0	100
CB/W1/L1/6	N/A	N/A	40	51.8	39	53	40.5	101
CB/W1/L1/7	N/A	N/A	40	51.8	42	53	40.5	101
CB/W1/L1/8	N/A	N/A	40	51.8	41	52	40.1	100
CB/W1/L1/9	N/A	N/A	40	51.8	40	53	40.5	101
CB/W1/L1/10	N/A	N/A	40	51.8	44	53	40.5	101
CB/W1/L1/5	N/A	N/A	40	51.8	50	53	40.5	101

REMARKS

N/A – Not Applicable

INSTRUMENT USED: HV12/1

Date:	22/9/14	Engineer:	Stephen Murdoch & Gregor Fulton	Sheet 8 of 13

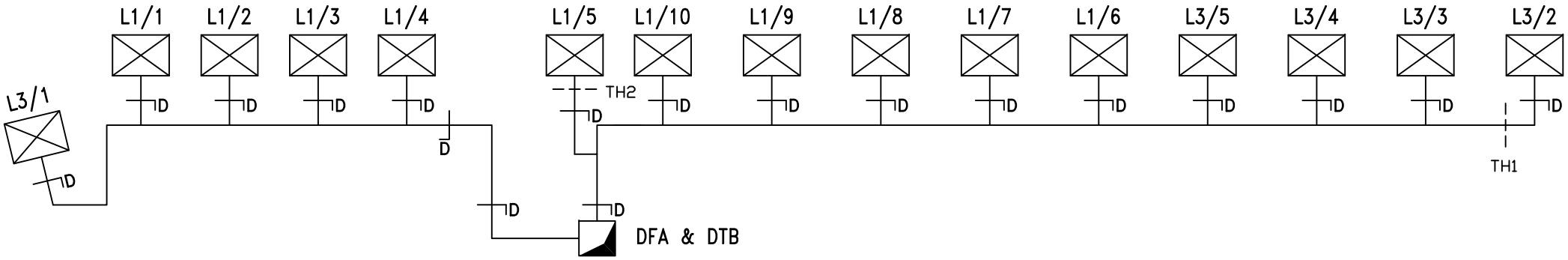

LEVEL 7 ZONE E

*ALL CHILLED BEAMS PRE-FIXED CB/W1

H&V Commissioning Services Limited
Kilknowe Office
16 Barrmill Road
Galston
East Ayrshire, KA4 8HH
Tel : 01563 821991
Fax: 01563 822220
email: talk2us@handv.co.uk

CONTRACT:
NSGH, ADULT & CHILDREN'S HOSPITAL - PLANTROOM 121

CLIENT:
MERCURY ENGINEERING LTD.

TITLE:
SCHEMATIC LAYOUT OF 121-AHU04 SUPPLY LEVEL 7

DRAWN: LH/DG
DATE: 17/07/15
DRG No.: 5902/V60
SHEET: 9 OF 13

Chilled Beam Data			Design Data		Test Data			
No.	**Size (mm)**	**Setting**	**Volume (l/s)**	**Pressure (Pa)**	**Initial Pressure (Pa)**	**Final Pressure (Pa)**	**Final Volume (l/s)**	**% Design**
LEVEL 6								
CB/W1/L3/1	N/A	N/A	40	63.0	51	64	40.3	101
CB/W1/L1/1	N/A	N/A	40	51.8	53	52	40.1	100
CB/W1/L1/2	N/A	N/A	40	51.8	56	53	40.5	101
CB/W1/L1/3	N/A	N/A	40	51.8	54	53	40.5	101
CB/W1/L1/4	N/A	N/A	40	51.8	58	53	40.5	101
CB/W1/L3/2	N/A	N/A	40	63.0	39	63	40.0	100
CB/W1/L3/3	N/A	N/A	40	63.0	42	65	40.6	102
CB/W1/L3/4	N/A	N/A	40	63.0	42	63	40.0	100
CB/W1/L3/5	N/A	N/A	40	63.0	40	63	40.0	100
CB/W1/L1/6	N/A	N/A	40	51.8	43	52	40.1	100
CB/W1/L1/7	N/A	N/A	40	51.8	46	52	40.1	100
CB/W1/L1/8	N/A	N/A	40	51.8	47	52	40.1	100
CB/W1/L1/9	N/A	N/A	40	51.8	46	52	40.1	100
CB/W1/L1/10	N/A	N/A	40	51.8	46	52	40.1	100
CB/W1/L1/5	N/A	N/A	40	51.8	54	53	40.5	101

REMARKS

N/A – Not Applicable

INSTRUMENT USED: HV12/1

Date:	22/9/14	Engineer:	Stephen Murdoch & Gregor Fulton	Sheet 10 of 13

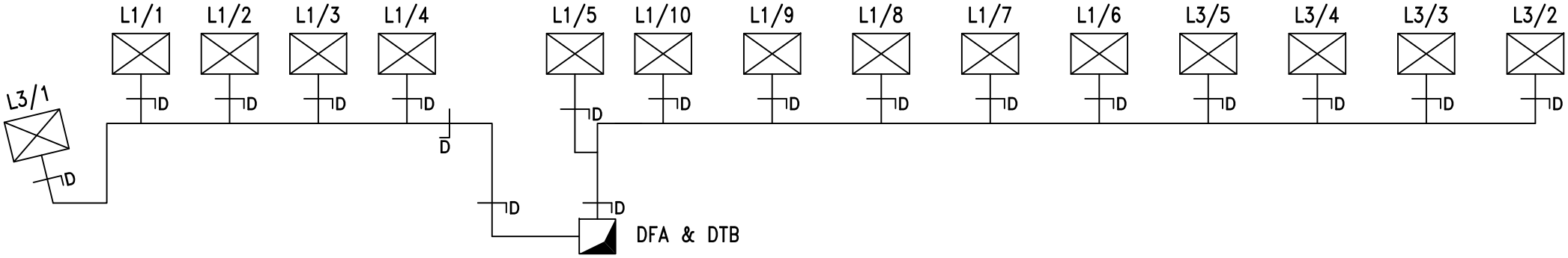

LEVEL 6 ZONE E

*ALL CHILLED BEAMS PRE-FIXED CB/W1

H&V Commissioning Services Limited
Kilknowe Office
16 Barrmill Road
Galston
East Ayrshire, KA4 8HH
Tel : 01563 821991
Fax: 01563 822220
email: talk2us@handv.co.uk

CONTRACT:
NSGH, ADULT & CHILDREN'S HOSPITAL - PLANTROOM 121

CLIENT:
MERCURY ENGINEERING LTD.

TITLE:
SCHEMATIC LAYOUT OF 121-AHU04 SUPPLY LEVEL 6

DRAWN: LH/DG

DATE: 17/07/15

DRG No.: 5902/V61

SHEET: 11 OF 13

Chilled Beam Data			Design Data		Test Data			
No.	**Size (mm)**	**Setting**	**Volume (l/s)**	**Pressure (Pa)**	**Initial Pressure (Pa)**	**Final Pressure (Pa)**	**Final Volume (l/s)**	**% Design**
LEVEL 5								
CB/W1/L3/1	N/A	N/A	40	63.0	51	63	40.0	100
CB/W1/L1/1	N/A	N/A	40	51.8	52	54	40.8	102
CB/W1/L1/2	N/A	N/A	40	51.8	56	52	40.1	100
CB/W1/L1/3	N/A	N/A	40	51.8	49	52	40.1	100
CB/W1/L1/4	N/A	N/A	40	51.8	59	52	40.1	100
CB/W1/L3/2	N/A	N/A	40	63.0	36	63	40.0	100
CB/W1/L3/3	N/A	N/A	40	63.0	39	63	40.0	100
CB/W1/L3/4	N/A	N/A	40	63.0	34	63	40.0	100
CB/W1/L3/5	N/A	N/A	40	63.0	40	63	40.0	100
CB/W1/L1/6	N/A	N/A	40	51.8	40	52	40.1	100
CB/W1/L1/7	N/A	N/A	40	51.8	43	52	40.1	100
CB/W1/L1/8	N/A	N/A	40	51.8	40	52	40.1	100
CB/W1/L1/9	N/A	N/A	40	51.8	45	52	40.1	100
CB/W1/L1/10	N/A	N/A	40	51.8	47	52	40.1	100
CB/W1/L1/5	N/A	N/A	40	51.8	54	52	40.1	100

REMARKS

N/A – Not Applicable

INSTRUMENT USED: HV12/1

Date:	22/9/14	Engineer:	Stephen Murdoch & Gregor Fulton	Sheet 12 of 13

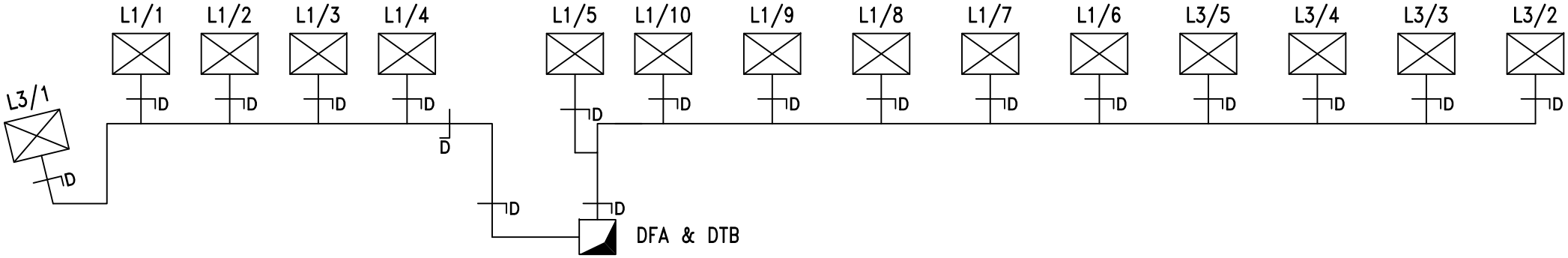

LEVEL 5 ZONE E

*ALL CHILLED BEAMS PRE-FIXED CB/W1

H&V Commissioning Services Limited
Kilknowe Office
16 Barrmill Road
Galston
East Ayrshire, KA4 8HH
Tel : 01563 821991
Fax: 01563 822220
email: talk2us@handv.co.uk

CONTRACT:
NSGH, ADULT & CHILDREN'S HOSPITAL - PLANTROOM 121

CLIENT:
MERCURY ENGINEERING LTD.

TITLE:
SCHEMATIC LAYOUT OF 121-AHU04 SUPPLY LEVEL 5

DRAWN: LH/DG
DATE: 17/07/15
DRG No.: 5902/V62
SHEET: 13 OF 13

	Client Representative / Commissioning Manager	Client
Witnessed By:		
Representing:	Brookfield Multiplex	
Signature:	Awaiting Signature	
Date:		
Witnessed By:		
Representing:		
Signature:		
Date:		

Remarks:

Date: 23/9/14	Engineer: Stephen Murdoch	Sheet 1 of 11

	AIR SYSTEMS PRE COMMISSIONING SHEET	✓	X	N/A
1.	Check AHU for damage and that all the components are secure	✓		
2.	Check the transit straps have been removed, if applicable	✓		
3.	Check pulleys are secure, tight, aligned and belts are correctly tensioned, if applicable	✓		
4.	Check with the controls engineer that the system is available to run and that plant rotation is correct	✓		
5.	Check all ductwork/air terminals are fitted and that air regulating dampers are open	✓		
6.	Check louvres are fitted and clear from obstructions, if applicable	✓		
7.	Check fire dampers are open, if applicable	✓		
8.	Check the motor overloads are suitable and set			✓
9.	Check VAV or CAV boxes are installed correctly and ready for use.			✓
10.	Check the floor plenums are complete, if applicable			✓
11.	Complete commissioning test sheets.	✓		

COMMENTS

AHU											
AHU Manufacturer			Barkell		Fan Size			Not Stated			
Fan Manufacturer			Comefri		AHU Serial No			Not Stated			
Fan Type			Centrifugal		AHU Model Nº.			Not Stated			
			Design		**Test**					**% Design**	
Air Volume		(L/S)	2091		2231					107	
External Static Pressure		(Pa)	530		Inlet	350	Outlet	26	Total	376	
Fan Rotational Speed		(R.P.M)	1800		1728						
Filter Test Data	Pre Filter	(Pa)	Inlet	*	Outlet	*			∆P	*45	
	Sec Filter	(Pa)	Inlet	N/A	Outlet	N/A			∆P	N/A	

MOTOR				
Manufacturer	TEC	Output kW	3.0	
Serial Nº	1305-0265339	Motor Full Load Current	6.52	Amps
Voltage	400	Motor Running Current	5.09	Amps
	Design	**Test**		
Rotational Speed.	1440	1382		

DRIVE DETAILS				
Motor Pulley/Shaft Size (mm∅)	SPZ 125	28	Motor Pulley Taper Lock Size	1610
Fan Pulley/Shaft Size (mm∅)	SPZ 100	40	Fan Pulley Taper Lock Size	1610
Belt Type/Size	XPZ	937	Nº. Of Belts	4
Shaft Centres mm	285		Adjustment	- 40 + 25 mm
Variable Speed Drive	Yes		Set Point	48 Hz

STANDBY PLANT						
Test Air Volume	2231	Inlet Pressure	350	Motor Rotational Speed	1382	Motor Running Current
% Design	107	Outlet Pressure	26	Fan Rotational Speed	1728	5.09 Amps
Variable Speed Drive			Yes	Set Point	48 Hz	

Comments.

N/A – Not Applicable

2nd Motor Serial Number: 1305-0265042

*Filter pressure taken from magnehelic gauges.

Instrument Used (Ref Nº.) HV12/1, HV12/4 & HV12/5

Date: 23/9/14	Engineer: Stephen Murdoch & Gregor Fulton	Sheet 3 of 11

VELOCITY PROFILE (taken facing air flow) **TEST HOLE LOCATION: PLANTROOM 121**

Test Hole Ref		Duct Dia (mm)		Duct Size (mm)		Duct Area		Design Air Volume		Design Air Velocity	
				Width x Height		M2		L/S		M/S	
Main TH				450	1000	0.4500		2091		4.65	
4.30	4.80	4.80	4.20								
5.10	5.30	5.20	4.80								
5.30	5.30	5.00	4.60								
5.10	5.30	5.20	4.70								
5.00	5.40	5.50	5.20								
4.30	5.00	5.00	4.60								
Velocity Sub Totals											
29.10	31.10	30.70	28.10								

Total Velocity	Number of Readings	Average Velocity	Measured Air Volume	% Design	Static Pressure
M/S		M/S	L/S		Pa
119	24	4.96	2231	107	185

Remarks:

Instrument Used: HV12/1

Date: 23/9/14 Engineer: Stephen Murdoch & Gregor Fulton Sheet 4 of 11

VELOCITY PROFILE (taken facing air flow) **TEST HOLE LOCATION: CEILING VOID**

Test Hole Ref		Duct Dia (mm)		Duct Size (mm)		Duct Area		Design Air Volume		Design Air Velocity	
				Width x Height		M2		L/S		M/S	
TH1		160				0.0201		45		2.24	
2.00	2.20										
2.20	2.20										
2.40	2.50										
2.20	2.20										
Velocity Sub Totals											
8.80	9.10										

Total Velocity	Number of Readings	Average Velocity	Measured Air Volume	% Design	Static Pressure
M/S		M/S	L/S		Pa
17.9	8	2.24	45	100	29

Remarks: Test hole serves Level 7 514-TG007. Test Volume 45 l/s ÷ Balometer Volume 41 l/s = 1.10 Factor.

Instrument Used: HV12/1

Date: 23/9/14 Engineer: Stephen Murdoch & Gregor Fulton Sheet 5 of 11

Design Data		Initial Test Data		Final Test & Regulation Data		
Terminal or Ref No	Design Air Volume l/s	Balometer Initial Air Volume l/s	Balometer Final Air Volume l/s	Balometer Factor	Balometer Final Air Volume l/s	% Design
LEVEL 7						
513-TG001	45	42	41	1.1	45.10	100
513-TG002	45	56	42	1.1	46.20	103
513-TG003	45	53	41	1.1	45.10	100
514-TG007	45	22	41	1.1	45.10	100
514-TG006	45	25	43	1.1	47.30	105
514-TG004	45	30	42	1.1	46.20	103
514-TG005	45	31	42	1.1	46.20	103
514-TG002	45	38	42	1.1	46.20	103
514-TG003	45	38	42	1.1	46.20	103
514-TG001	45	38	42	1.1	46.20	103
513-TG008	45	43	41	1.1	45.10	100
513-TG006	45	50	42	1.1	46.20	103
513-TG007	45	60	42	1.1	46.20	103
513-TG005	45	56	42	1.1	46.20	103
513-TG004	45	55	42	1.1	46.20	103
513-TG011	22	17	21	1.1	23.10	105

Remarks:

Instrument Used: HV12/15

Date: 23/9/14	Engineer: Stephen Murdoch & Gregor Fulton	Sheet 6 of 11

LEVEL 7 ZONE E

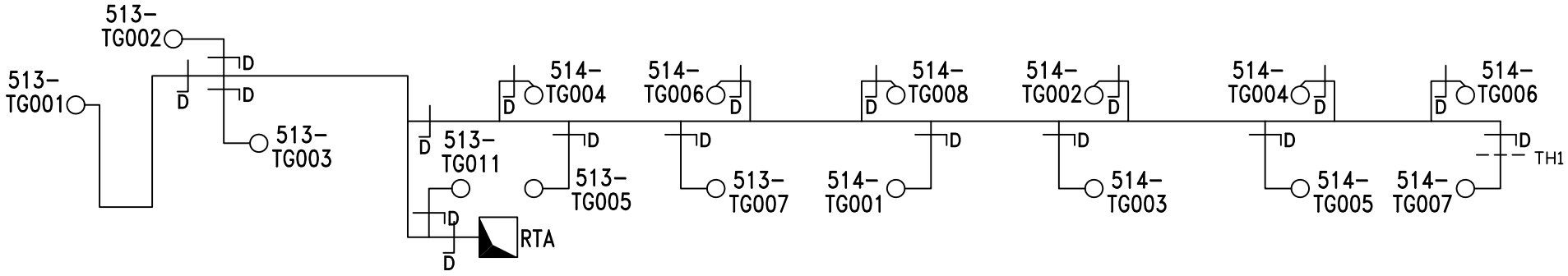

PLANTROOM 121

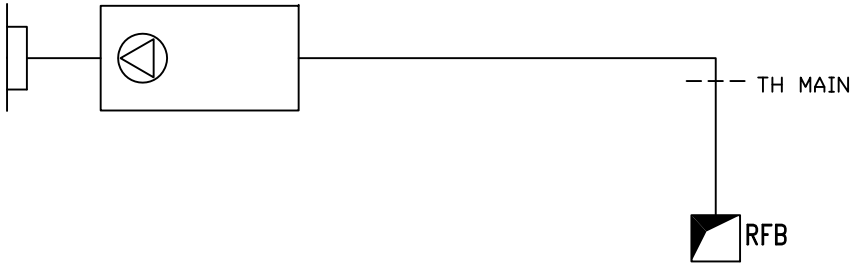

H&V Commissioning Services Limited
Kilknowe Office
16 Barrmill Road
Galston
East Ayrshire, KA4 8HH
Tel : 01563 821991
Fax: 01563 822220
email: talk2us@handv.co.uk

CONTRACT:
NSGH, ADULT & CHILDREN'S HOSPITAL - PLANTROOM 121

CLIENT:
MERCURY ENGINEERING UK

TITLE:
SCHEMATIC LAYOUT OF

121-AHU04 DIRTY EXTRACT LEVEL 7

DRAWN: LH/DG

DATE: 17/07/15

DRG No.: 5902/V67

SHEET: 7 OF 11

Design Data		Initial Test Data		Final Test & Regulation Data		
Terminal or Ref No	Design Air Volume l/s	Balometer Initial Air Volume l/s	Balometer Final Air Volume l/s	Balometer Factor	Balometer Final Air Volume l/s	% Design
LEVEL 6						
513-TG001	45	30	43	1.1	47.30	105
513-TG002	45	41	42	1.1	46.20	103
513-TG003	45	42	43	1.1	47.30	105
514-TG007	45	20	45	1.1	49.50	110
514-TG006	45	25	42	1.1	46.20	103
514-TG004	45	30	42	1.1	46.20	103
514-TG005	45	38	42	1.1	46.20	103
514-TG002	45	40	42	1.1	46.20	103
514-TG003	45	40	42	1.1	46.20	103
514-TG001	45	42	42	1.1	46.20	103
513-TG008	45	48	42	1.1	46.20	103
513-TG006	45	51	42	1.1	46.20	103
513-TG007	45	55	44	1.1	48.40	108
513-TG005	45	56	42	1.1	46.20	103
513-TG004	45	63	42	1.1	46.20	103
513-TG011	22	38	21	1.1	23.10	105

Remarks:

Instrument Used: HV12/15

Date: 23/9/14	Engineer: Stephen Murdoch & Gregor Fulton	Sheet 8 of 11

LEVEL 6 ZONE E

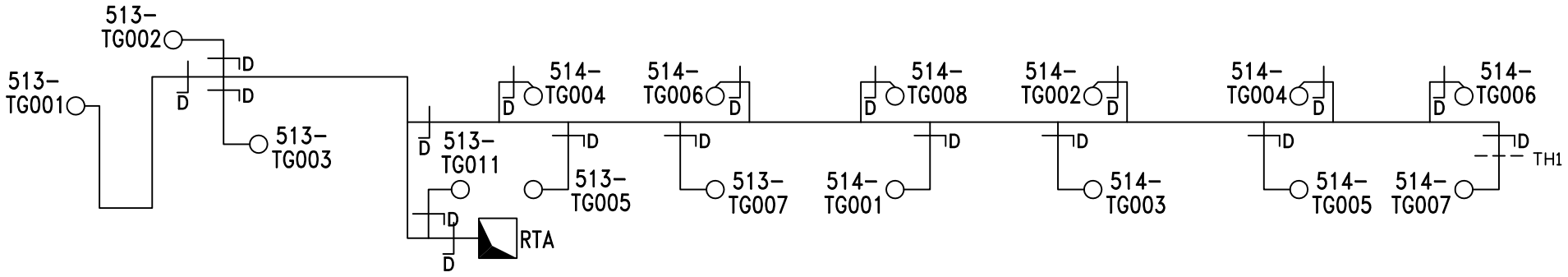

H&V Commissioning Services Limited **Kilknowe Office** **16 Barrmill Road** **Galston** **East Ayrshire, KA4 8HH** **Tel : 01563 821991** **Fax: 01563 822220** **email: talk2us@handv.co.uk**	**CONTRACT:** **NSGH, ADULT & CHILDREN'S HOSPITAL - PLANTROOM 121** **CLIENT:** **MERCURY ENGINEERING UK**	**TITLE:** **SCHEMATIC LAYOUT OF** **121-AHU04 DIRTY EXTRACT LEVEL 6**	**DRAWN:** LH/DG **DATE:** 17/07/15 **DRG No.:** 5902/V68 **SHEET:** 9 OF 11

Design Data		Initial Test Data		Final Test & Regulation Data		
Terminal or Ref No	Design Air Volume l/s	Balometer Initial Air Volume l/s	Balometer Final Air Volume l/s	Balometer Factor	Balometer Final Air Volume l/s	% Design
LEVEL 5						
513-TG001	45	39	42	1.1	46.20	103
513-TG002	45	56	42	1.1	46.20	103
513-TG003	45	56	44	1.1	48.40	108
514-TG007	45	26	42	1.1	46.20	103
514-TG006	45	29	43	1.1	47.30	105
514-TG004	45	30	43	1.1	47.30	105
514-TG005	45	21	42	1.1	46.20	103
514-TG002	45	41	42	1.1	46.20	103
514-TG003	45	45	42	1.1	46.20	103
514-TG001	45	42	42	1.1	46.20	103
513-TG008	45	44	43	1.1	47.30	105
513-TG006	45	57	42	1.1	46.20	103
513-TG007	45	45	42	1.1	46.20	103
513-TG005	45	47	43	1.1	47.30	105
513-TG004	45	55	43	1.1	47.30	105
513-TG011	22	29	21	1.1	23.10	105

Remarks:

Instrument Used: HV12/15

Date: 23/9/14	Engineer: Stephen Murdoch & Gregor Fulton	Sheet 10 of 11

LEVEL 5 ZONE E

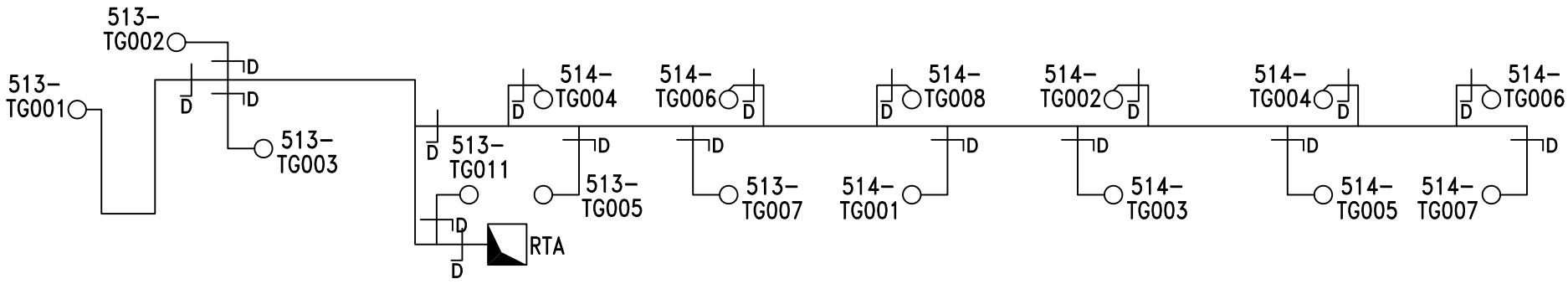

H&V Commissioning Services Limited **Kilknowe Office** **16 Barrmill Road** **Galston** **East Ayrshire, KA4 8HH** **Tel : 01563 821991** **Fax: 01563 822220** **email: talk2us@handv.co.uk**	**CONTRACT:** **NSGH, ADULT & CHILDREN'S HOSPITAL - PLANTROOM 121** **CLIENT:** **MERCURY ENGINEERING UK**	**TITLE:** **SCHEMATIC LAYOUT OF** **121-AHU04 DIRTY EXTRACT LEVEL 5**	**DRAWN:** LH/DG **DATE:** 17/07/15 **DRG No.:** 5902/V69 **SHEET:** 11 OF 11

04/2020

	Client Representative / Commissioning Manager	Client
Witnessed By:		
Representing:	Brookfield Multiplex	
Signature:	Awaiting Signature	
Date:		
Witnessed By:		
Representing:		
Signature:		
Date:		

Remarks:

Date: 11/9/14	Engineer: Stephen Murdoch	Sheet 1 of 13

	AIR SYSTEMS PRE COMMISSIONING SHEET	✓	X	N/A
1.	Check AHU for damage and that all the components are secure	✓		
2.	Check the transit straps have been removed, if applicable	✓		
3.	Check pulleys are secure, tight, aligned and belts are correctly tensioned, if applicable	✓		
4.	Check with the controls engineer that the system is available to run and that plant rotation is correct	✓		
5.	Check all ductwork/air terminals are fitted and that air regulating dampers are open	✓		
6.	Check louvres are fitted and clear from obstructions, if applicable	✓		
7.	Check fire dampers are open, if applicable	✓		
8.	Check the motor overloads are suitable and set			✓
9.	Check VAV or CAV boxes are installed correctly and ready for use.			✓
10.	Check the floor plenums are complete, if applicable			✓
11.	Complete commissioning test sheets.	✓		

COMMENTS

AHU										
AHU Manufacturer		Barkell		Fan Size		400				
Fan Manufacturer		Comefri		AHU Serial No		OPIB3058028				
Fan Type		Centrifugal		AHU Model Nº.		TZAF 400 RFF				
		Design		**Test**				**% Design**		
Air Volume (L/S)		1800		1967				109		
External Static Pressure (Pa)		540		Inlet	50	Outlet	226	Total	276	
Fan Rotational Speed (R.P.M)		2700		2079						
Filter Test Data	Pre Filter (Pa)	Inlet	*	Outlet	*			ΔP	*10	
	Sec Filter (Pa)	Inlet	*	Outlet	*			ΔP	*60	

MOTOR			
Manufacturer	TEC	Output kW	4.0
Serial Nº	1305-8562786	Motor Full Load Current	8.14 Amps
Voltage	400	Motor Running Current	4.74 Amps
	Design	**Test**	
Rotational Speed.	1430	1101	

DRIVE DETAILS			
Motor Pulley/Shaft Size (mm∅)	SPZ 140	28	Motor Pulley Taper Lock Size	1610
Fan Pulley/Shaft Size (mm∅)	SPZ 100	40	Fan Pulley Taper Lock Size	1610
Belt Type/Size	XPZ	950	Nº. Of Belts	4
Shaft Centres mm	275		Adjustment	- 25 + 35 mm
Variable Speed Drive	Yes		Set Point	38.5 Hz

STANDBY PLANT							
Test Air Volume	1967	Inlet Pressure	50	Motor Rotational Speed	1101	Motor Running Current	
% Design	109	Outlet Pressure	226	Fan Rotational Speed	2079	4.74 Amps	
Variable Speed Drive			Yes	Set Point		38.5 Hz	

Comments.

N/A – Not Applicable

2nd Motor Serial Number: 1305-0562788

*Filter pressure taken from magnehelic gauges.

Control Static Pressure Sensor = 227Pa

Instrument Used (Ref Nº.) HV12/1, HV12/4 & HV12/5

Date: 11/9/14	Engineer: Stephen Murdoch & Gregor Fulton	Sheet 3 of 13

VELOCITY PROFILE (taken facing air flow) **TEST HOLE LOCATION: LEVEL 8 RISER T3**

Test Hole Ref		Duct Dia (mm)		Duct Size (mm)		Duct Area		Design Air Volume		Design Air Velocity	
				Width x Height		M2		L/S		M/S	
Main TH				800	650	0.5200		1800		3.46	
3.30	3.90	4.00	3.90	3.90	3.70						
3.80	4.00	4.00	3.90	4.00	3.90						
3.70	3.80	3.90	3.90	4.00	4.00						
3.30	3.70	3.60	3.70	3.60	3.30						
Velocity Sub Totals											
14.10	15.40	15.50	15.40	15.50	14.90						

Total Velocity	Number of Readings	Average Velocity	Measured Air Volume	% Design	Static Pressure
M/S		M/S	L/S		Pa
90.8	24	3.78	1967	109	172

Remarks:

Instrument Used: HV12/1

Date: 11/9/14 Engineer: Stephen Murdoch & Gregor Fulton Sheet 4 of 13

VELOCITY PROFILE (taken facing air flow) **TEST HOLE LOCATION: CEILING VOID**

Test Hole Ref		Duct Dia (mm)		Duct Size (mm)		Duct Area		Design Air Volume		Design Air Velocity	
				Width x Height		M2		L/S		M/S	
TH1		160				0.0201		40		1.99	
2.00	2.00										
2.20	2.30										
2.50	2.20										
2.20	2.20										
Velocity Sub Totals											
8.90	8.70										

Total Velocity	Number of Readings	Average Velocity	Measured Air Volume	% Design	Static Pressure
M/S		M/S	L/S		Pa
17.6	8	2.20	44	111	76

Remarks: Test hole serves CB/W1/L3/3

Instrument Used: HV12/1

Date: 11/9/14 Engineer: Stephen Murdoch & Gregor Fulton Sheet 5 of 13

VELOCITY PROFILE (taken facing air flow) **TEST HOLE LOCATION: CEILING VOID**

Test Hole Ref		Duct Dia (mm)		Duct Size (mm)		Duct Area		Design Air Volume		Design Air Velocity	
				Width x Height		M2		L/S		M/S	
TH2		160				0.0201		40		1.99	
2.00	2.20										
1.90	1.90										
2.10	2.10										
2.20	2.20										
Velocity Sub Totals											
8.20	8.40										

Total Velocity	Number of Readings	Average Velocity	Measured Air Volume	% Design	Static Pressure
M/S		M/S	L/S		Pa
16.6	8	2.08	42	104	65

Remarks: Test hole serves CB/W1/L1/5

Instrument Used: HV12/1

Date: 11/9/14 Engineer: Stephen Murdoch & Gregor Fulton Sheet 6 of 13

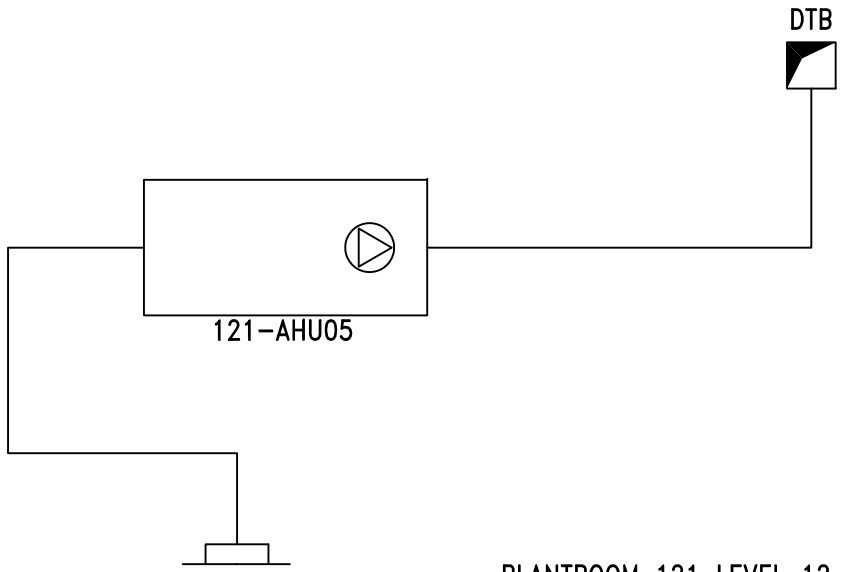

H&V Commissioning Services Limited
Kilknowe Office
16 Barrmill Road
Galston
East Ayrshire, KA4 8HH
Tel : 01563 821991
Fax: 01563 822220
email: talk2us@handv.co.uk

CONTRACT:
NSGH, ADULT & CHILDREN'S HOSPITAL - PLANTROOM 121

CLIENT:
MERCURY ENGINEERING UK

TITLE:
SCHEMATIC LAYOUT OF

121-AHU05 SUPPLY
(5TH - 7TH FLOOR WARDS)

DRAWN: LH/SM

DATE: 17/07/15

DRG No.: 5902/V63

SHEET: 7 OF 13

Chilled Beam Data			Design Data		Test Data			
No.	**Size (mm)**	**Setting**	**Volume (l/s)**	**Pressure (Pa)**	**Initial Pressure (Pa)**	**Final Pressure (Pa)**	**Final Volume (l/s)**	**% Design**
LEVEL 7								
CB/W1/L3/1	N/A	N/A	40	63.0	87	63	40.0	100
CB/W1/L3/2	N/A	N/A	40	63.0	82	64	40.3	101
CB/W1/L1/1	N/A	N/A	40	51.8	89	52	40.1	100
CB/W1/L1/2	N/A	N/A	40	51.8	99	52	40.1	100
CB/W1/L1/3	N/A	N/A	40	51.8	104	54	40.8	102
CB/W1/L1/4	N/A	N/A	40	51.8	108	53	40.5	101
CB/W1/L1/5	N/A	N/A	40	51.8	116	54	40.8	102
CB/W1/L3/3	N/A	N/A	40	63.0	62	63	40.0	100
CB/W1/L3/4	N/A	N/A	40	63.0	62	63	40.0	100
CB/W1/L3/5	N/A	N/A	40	63.0	62	64	40.3	101
CB/W1/L3/6	N/A	N/A	40	63.0	69	65	40.6	102
CB/W1/L1/6	N/A	N/A	40	51.8	67	54	40.8	102
CB/W1/L1/7	N/A	N/A	40	51.8	75	53	40.5	101
CB/W1/L1/8	N/A	N/A	40	51.8	80	52	40.1	100
CB/W1/L1/9	N/A	N/A	40	51.8	85	54	40.8	102

REMARKS

N/A – Not Applicable

INSTRUMENT USED: HV12/1

Date:	11/9/14	Engineer:	Stephen Murdoch & Gregor Fulton	Sheet 8 of 13

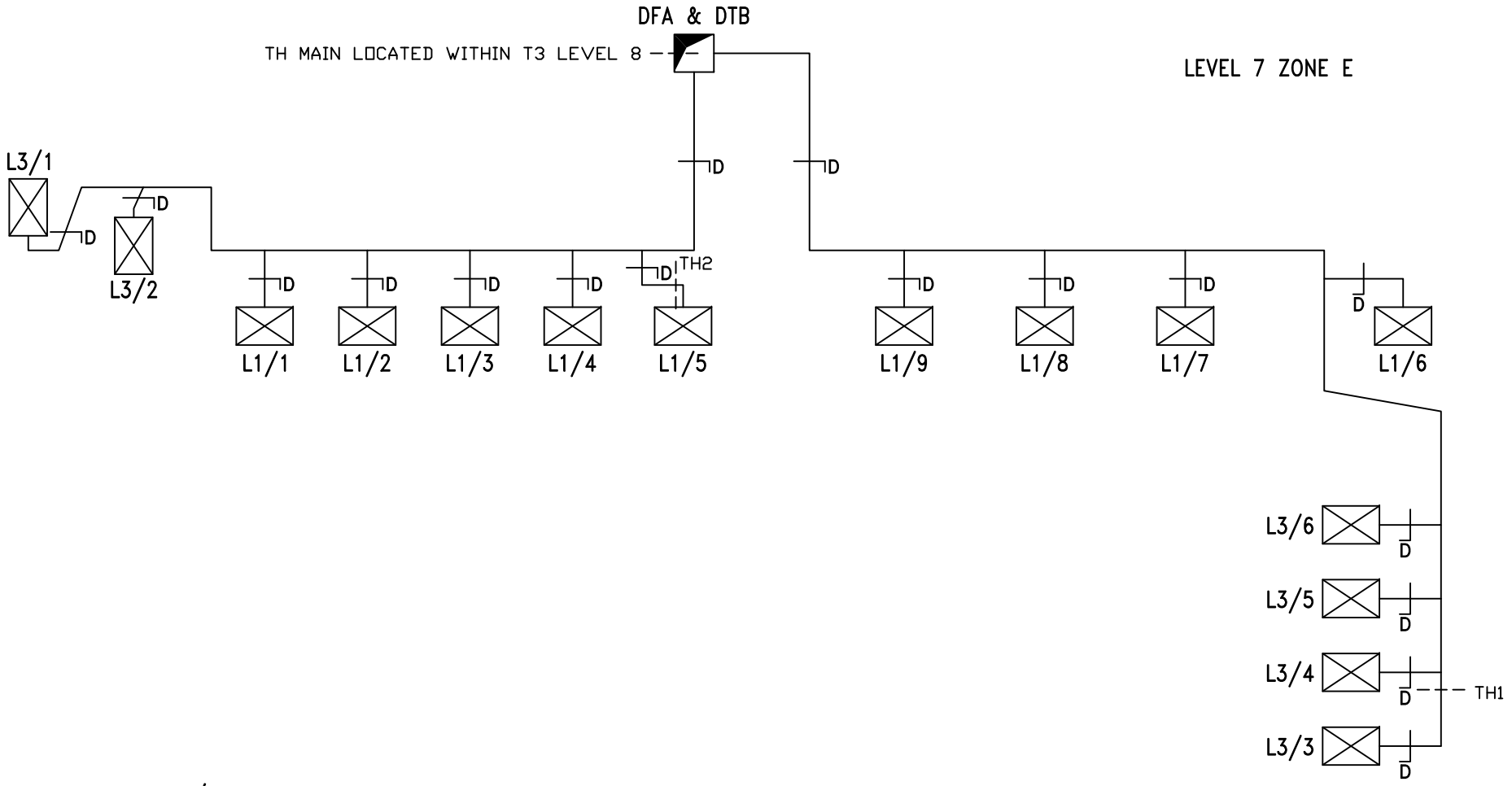

*ALL CHILLED BEAMS PRE-FIXED CB/W1

H&V Commissioning Services Limited
Kilknowe Office
16 Barrmill Road
Galston
East Ayrshire, KA4 8HH
Tel : 01563 821991
Fax: 01563 822220
email: talk2us@handv.co.uk

CONTRACT:	**NSGH, ADULT & CHILDREN'S HOSPITAL - PLANTROOM 121**
CLIENT:	**MERCURY ENGINEERING UK**
TITLE:	**SCHEMATIC LAYOUT OF** **121-AHU05 SUPPLY (5TH - 7TH FLOOR WARDS) LEVEL 7**
DRAWN:	**LH/DG**
DATE:	**17/07/15**
DRG No.:	**5902/V64**
SHEET:	**9 OF 13**

Chilled Beam Data			Design Data		Test Data			
No.	**Size (mm)**	**Setting**	**Volume (l/s)**	**Pressure (Pa)**	**Initial Pressure (Pa)**	**Final Pressure (Pa)**	**Final Volume (l/s)**	**% Design**
LEVEL 6								
CB/W1/L3/1	N/A	N/A	40	63.0	80	65	40.6	102
CB/W1/L3/2	N/A	N/A	40	63.0	76	63	40.0	100
CB/W1/L1/1	N/A	N/A	40	51.8	80	54	40.8	102
CB/W1/L1/2	N/A	N/A	40	51.8	86	54	40.8	102
CB/W1/L1/3	N/A	N/A	40	51.8	86	52	40.1	100
CB/W1/L1/4	N/A	N/A	40	51.8	97	53	40.5	101
CB/W1/L1/5	N/A	N/A	40	51.8	101	54	40.8	102
CB/W1/L3/3	N/A	N/A	40	63.0	74	63	40.0	100
CB/W1/L3/4	N/A	N/A	40	63.0	77	63	40.0	100
CB/W1/L3/5	N/A	N/A	40	63.0	82	64	40.3	101
CB/W1/L3/6	N/A	N/A	40	63.0	86	66	40.9	102
CB/W1/L1/6	N/A	N/A	40	51.8	78	53	40.5	101
CB/W1/L1/7	N/A	N/A	40	51.8	92	53	40.5	101
CB/W1/L1/8	N/A	N/A	40	51.8	88	54	40.8	102
CB/W1/L1/9	N/A	N/A	40	51.8	94	56	41.6	104

REMARKS

N/A – Not Applicable

INSTRUMENT USED: HV12/1

Date:	11/9/14	Engineer:	Stephen Murdoch & Gregor Fulton	Sheet 10 of 13

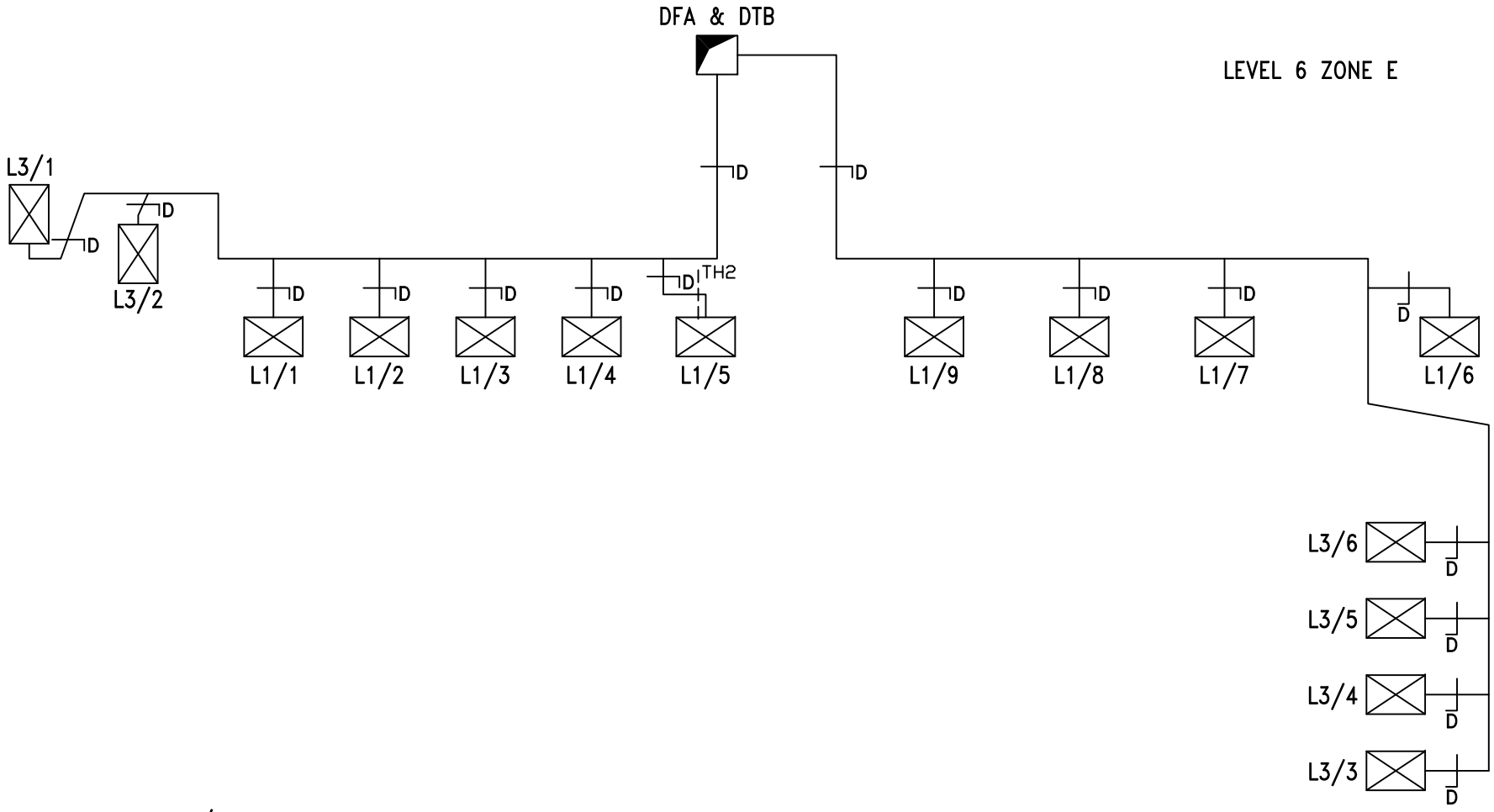

*ALL CHILLED BEAMS PRE-FIXED CB/W1

H&V Commissioning Services Limited
Kilknowe Office
16 Barrmill Road
Galston
East Ayrshire, KA4 8HH
Tel : 01563 821991
Fax: 01563 822220
email: talk2us@handv.co.uk

CONTRACT:
NSGH, ADULT & CHILDREN'S HOSPITAL - PLANTROOM 121

CLIENT:
MERCURY ENGINEERING UK

TITLE:
SCHEMATIC LAYOUT OF

121-AHU05 SUPPLY
(5TH - 7TH FLOOR WARDS)
LEVEL 6

DRAWN: LH/DG

DATE: 17/07/15

DRG No.: 5902/V65

SHEET: 11 OF 13

Chilled Beam Data			Design Data		Test Data			
No.	**Size (mm)**	**Setting**	**Volume (l/s)**	**Pressure (Pa)**	**Initial Pressure (Pa)**	**Final Pressure (Pa)**	**Final Volume (l/s)**	**% Design**
LEVEL 5								
CB/W1/L3/1	N/A	N/A	40	63.0	83	63	40.0	100
CB/W1/L3/2	N/A	N/A	40	63.0	75	63	40.0	100
CB/W1/L1/1	N/A	N/A	40	51.8	85	52	40.1	100
CB/W1/L1/2	N/A	N/A	40	51.8	94	54	40.8	102
CB/W1/L1/3	N/A	N/A	40	51.8	92	53	40.5	101
CB/W1/L1/4	N/A	N/A	40	51.8	94	54	40.8	102
CB/W1/L1/5	N/A	N/A	40	51.8	107	54	40.8	102
CB/W1/L3/3	N/A	N/A	40	63.0	70	63	40.0	100
CB/W1/L3/4	N/A	N/A	40	63.0	72	65	40.6	102
CB/W1/L3/5	N/A	N/A	40	63.0	73	64	40.3	101
CB/W1/L3/6	N/A	N/A	40	63.0	78	63	40.0	100
CB/W1/L1/6	N/A	N/A	40	51.8	71	52	40.1	100
CB/W1/L1/7	N/A	N/A	40	51.8	79	54	40.8	102
CB/W1/L1/8	N/A	N/A	40	51.8	86	55	41.2	105
CB/W1/L1/9	N/A	N/A	40	51.8	97	52	40.1	100

REMARKS

N/A – Not Applicable

INSTRUMENT USED: HV12/1

Date:	11/9/14	Engineer:	Stephen Murdoch & Gregor Fulton	Sheet 12 of 13

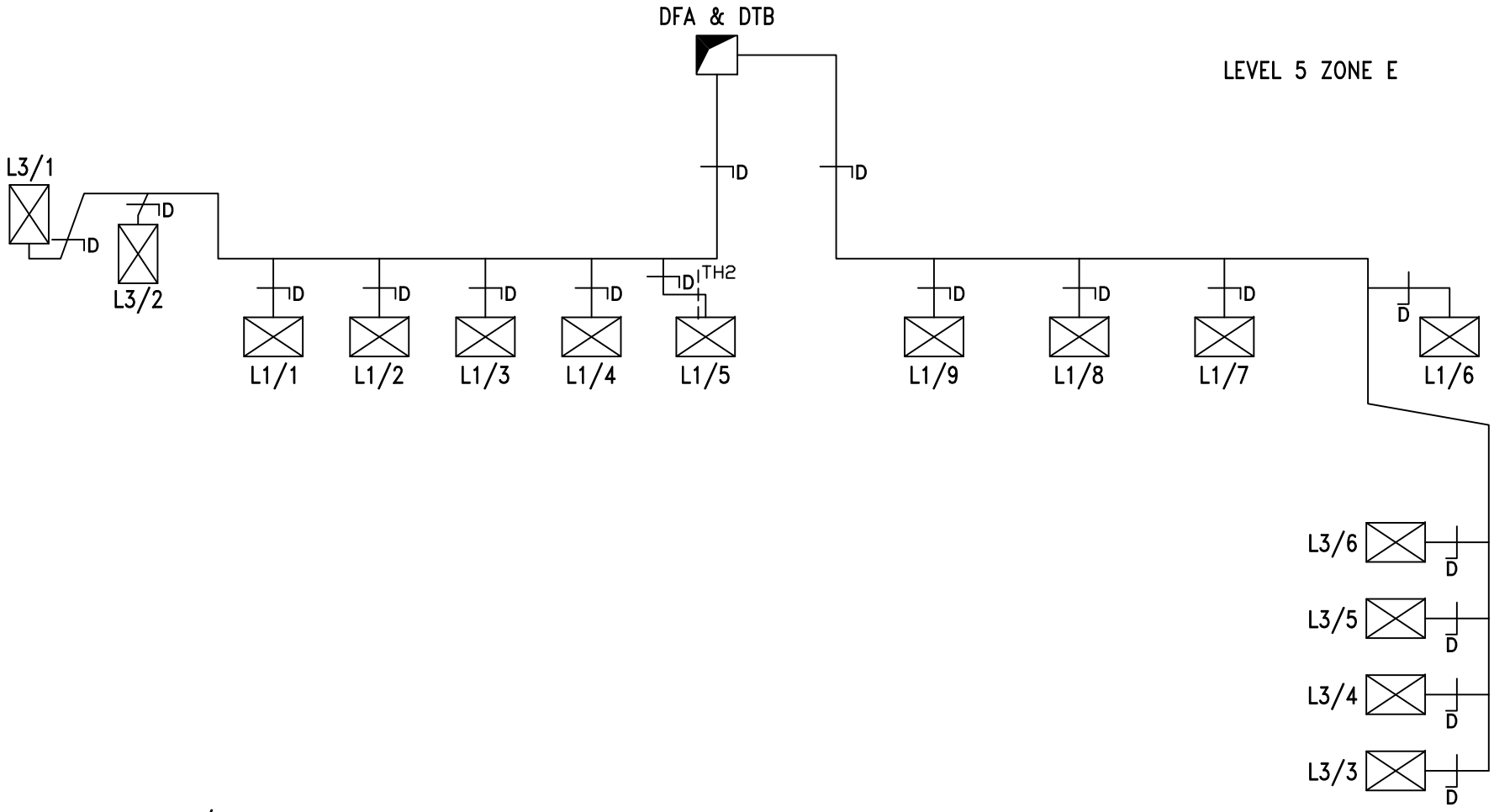

*ALL CHILLED BEAMS PRE-FIXED CB/W1

H&V Commissioning Services Limited
Kilknowe Office
16 Barrmill Road
Galston
East Ayrshire, KA4 8HH
Tel : 01563 821991
Fax: 01563 822220
email: talk2us@handv.co.uk

CONTRACT:
NSGH, ADULT & CHILDREN'S HOSPITAL - PLANTROOM 121

CLIENT:
MERCURY ENGINEERING UK

TITLE:
SCHEMATIC LAYOUT OF

121-AHU05 SUPPLY (5TH - 7TH FLOOR WARDS) LEVEL 5

DRAWN: LH/DG

DATE: 17/07/15

DRG No.: 5902/V66

SHEET: 13 OF 13

	Client Representative / Commissioning Manager	Client
Witnessed By:		
Representing:	Brookfield Multiplex	
Signature:	Awaiting Signature	
Date:		
Witnessed By:		
Representing:		
Signature:		
Date:		

Remarks:

Date: 12/9/14	Engineer: Stephen Murdoch	Sheet 1 of 12

	AIR SYSTEMS PRE COMMISSIONING SHEET	✓	X	N/A
1.	Check AHU for damage and that all the components are secure	✓		
2.	Check the transit straps have been removed, if applicable	✓		
3.	Check pulleys are secure, tight, aligned and belts are correctly tensioned, if applicable	✓		
4.	Check with the controls engineer that the system is available to run and that plant rotation is correct	✓		
5.	Check all ductwork/air terminals are fitted and that air regulating dampers are open	✓		
6.	Check louvres are fitted and clear from obstructions, if applicable	✓		
7.	Check fire dampers are open, if applicable	✓		
8.	Check the motor overloads are suitable and set			✓
9.	Check VAV or CAV boxes are installed correctly and ready for use.			✓
10.	Check the floor plenums are complete, if applicable			✓
11.	Complete commissioning test sheets.	✓		

COMMENTS

AHU												
AHU Manufacturer			Barkell		Fan Size			500				
Fan Manufacturer			Comefri		AHU Serial No			OPIB3058030				
Fan Type			Centrifugal		AHU Model Nº.			TZAF 500RFF				
			Design		**Test**						**% Design**	
Air Volume (L/S)			2223		2370						107	
External Static Pressure (Pa)			430		Inlet	196	Outlet	33			Total	229
Fan Rotational Speed (R.P.M)			2100		1596							
Filter Test Data	Pre Filter (Pa)	Inlet	*		Outlet	*					ΔP	*25
	Sec Filter (Pa)	Inlet	N/A		Outlet	N/A					ΔP	N/A
MOTOR												
Manufacturer			TEC		Output kW			4.0				
Serial Nº			1305-0562991		Motor Full Load Current			8.14			Amps	
Voltage			400		Motor Running Current			4.51			Amps	
			Design		**Test**							
Rotational Speed.			1430		1087							
DRIVE DETAILS												
Motor Pulley/Shaft Size (mm∅)		SPZ 140		28	Motor Pulley Taper Lock Size			1610				
Fan Pulley/Shaft Size (mm∅)		SPZ 150		50	Fan Pulley Taper Lock Size			2517				
Belt Type/Size		XPZ		1180	Nº. Of Belts			4				
Shaft Centres mm		350			Adjustment			-	28	+	35	mm
Variable Speed Drive		Yes			Set Point			38 Hz				
STANDBY PLANT												
Test Air Volume	2370	Inlet Pressure	196		Motor Rotational Speed	1087		Motor Running Current				
% Design	107	Outlet Pressure	33		Fan Rotational Speed	1596		4.51 Amps				
Variable Speed Drive			Yes		Set Point	38 Hz						

Comments.

N/A – Not Applicable

2nd Motor Serial Number: 1305-0562981

*Filter pressure taken from magnehelic gauges.

Instrument Used (Ref Nº.) HV12/1, HV12/4 & HV12/5

Date: 12/9/14	Engineer: Stephen Murdoch & Gregor Fulton	Sheet 3 of 12

VELOCITY PROFILE (taken facing air flow) **TEST HOLE LOCATION: LEVEL 8 RISER T3**

Test Hole Ref		Duct Dia (mm)		Duct Size (mm)		Duct Area		Design Air Volume		Design Air Velocity	
				Width x Height		M2		L/S		M/S	
Main TH				1150	650	0.7475		2223		2.97	
3.60	3.50	2.90	2.70	3.00	3.00						
3.60	3.30	2.40	2.40	2.80	3.40						
3.50	3.30	2.70	2.70	3.20	3.70						
3.30	3.50	3.30	3.30	3.30	3.70						
Velocity Sub Totals											
14.00	13.60	11.30	11.10	12.30	13.80						

Total Velocity	Number of Readings	Average Velocity	Measured Air Volume	% Design	Static Pressure
M/S		M/S	L/S		Pa
76.1	24	3.17	2370	107	168

Remarks:

Instrument Used: HV12/1

Date: 12/9/14 Engineer: Stephen Murdoch & Gregor Fulton Sheet 4 of 12

VELOCITY PROFILE (taken facing air flow) **TEST HOLE LOCATION: CEILING VOID**

Test Hole Ref		Duct Dia (mm)		Duct Size (mm)		Duct Area		Design Air Volume		Design Air Velocity	
				Width x Height		M2		L/S		M/S	
TH1		160				0.0201		45		2.24	
2.20	2.10										
2.40	2.40										
2.30	2.40										
2.00	2.10										
Velocity Sub Totals											
8.90	9.00										

Total Velocity	Number of Readings	Average Velocity	Measured Air Volume	% Design	Static Pressure
M/S		M/S	L/S		Pa
17.9	8	2.24	45	100	23

Remarks: Test hole serves Level 7 512-TG006. Test Volume 45 l/s ÷ Balometer Volume 40 l/s = 1.13 Factor.

Instrument Used: HV12/1

Date: 11/9/14 Engineer: Stephen Murdoch & Gregor Fulton Sheet 5 of 12

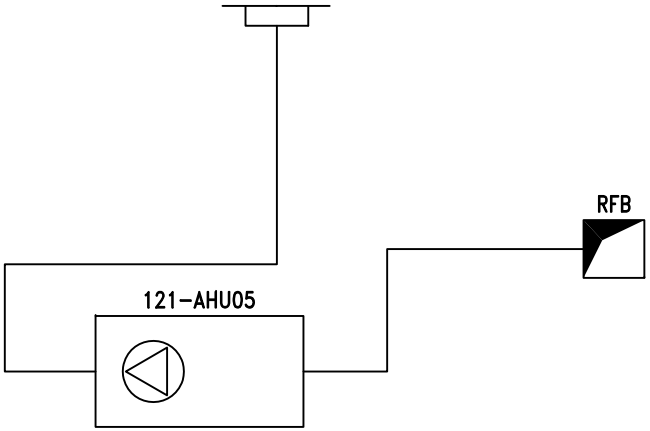

PLANTROOM 121 LEVEL 12

H&V Commissioning Services Limited
Kilknowe Office
16 Barrmill Road
Galston
East Ayrshire, KA4 8HH
Tel : 01563 821991
Fax: 01563 822220
email: talk2us@handv.co.uk

CONTRACT:
NSGH, ADULT & CHILDREN'S HOSPITAL - PLANTROOM 121

CLIENT:
MERCURY ENGINEERING UK

TITLE:
SCHEMATIC LAYOUT OF

121-AHU05 EXTRACT
(5TH TO 7TH FLOOR WARDS)

DRAWN: LH/SM

DATE: 10/07/15

DRG No.: 5902/V55

SHEET: 6 OF 12

Design Data		Initial Test Data		Final Test & Regulation Data		
Terminal or Ref No	Design Air Volume l/s	Balometer Initial Air Volume l/s	Balometer Final Air Volume l/s	Balometer Factor	Balometer Final Air Volume l/s	% Design
LEVEL 7						
512-TG007	35	23	33	1.13	37.29	107
512-TG006	45	24	40	1.13	45.20	100
512-TG005	45	30	40	1.13	45.20	100
512-TG003	45	35	40	1.13	45.20	100
512-TG004	45	46	40	1.13	45.20	100
512-TG002	45	49	40	1.13	45.20	100
512-TG001	45	58	40	1.13	45.20	100
513-TG018	45	56	40	1.13	45.20	100
513-TG017	45	68	40	1.13	45.20	100
513-TG016	45	68	40	1.13	45.20	100
513-TG012	45	56	41	1.13	46.33	103
513-TG013	45	62	42	1.13	47.46	105
513-TG015	45	65	42	1.13	47.46	105
513-TG014	45	64	42	1.13	47.46	105
513-TG009	62	114	56	1.13	63.28	102
513-TG010	59	168	55	1.13	62.15	105

Remarks:

Instrument Used: HV12/15

Date: 11/9/14	Engineer: Stephen Murdoch & Gregor Fulton	Sheet 7 of 12

LEVEL 7 ZONE E

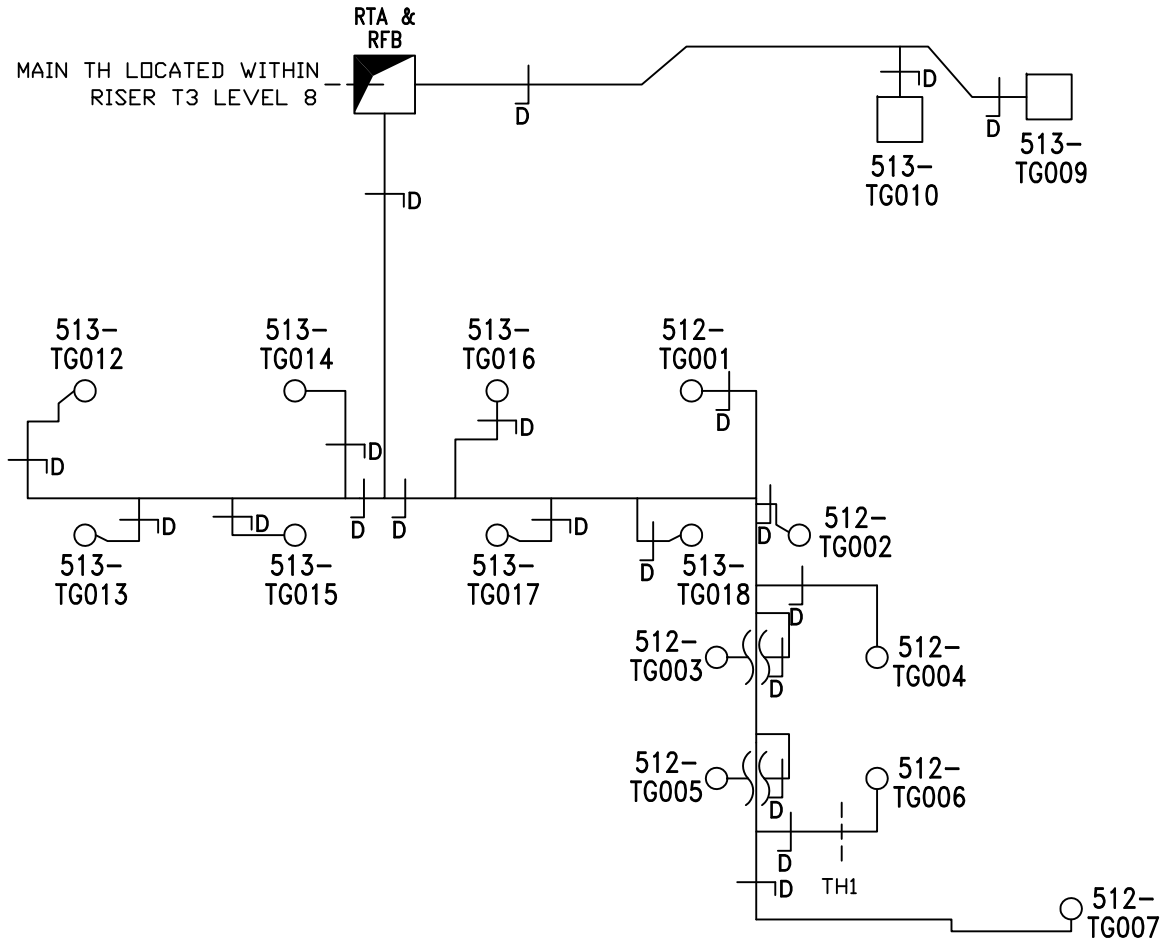

H&V Commissioning Services Limited **Kilknowe Office** **16 Barrmill Road** **Galston** **East Ayrshire, KA4 8HH** **Tel : 01563 821991** **Fax: 01563 822220** **email: talk2us@handv.co.uk**	**CONTRACT:** **NSGH, ADULT & CHILDREN'S HOSPITAL - PLANTROOM 121** **CLIENT:** **MERCURY ENGINEERING UK**	**TITLE:** **SCHEMATIC LAYOUT OF** **121-AHU05 DIRTY EXTRACT LEVEL 7**	**DRAWN:** LH/DG **DATE:** 10/07/15 **DRG No.:** 5902/V58 **SHEET:** 8 OF 12

Design Data		Initial Test Data		Final Test & Regulation Data		
Terminal or Ref No	Design Air Volume l/s	Balometer Initial Air Volume l/s	Balometer Final Air Volume l/s	Balometer Factor	Balometer Final Air Volume l/s	% Design
LEVEL 6						
512-TG007	35	21	33	1.13	37.29	107
512-TG006	45	25	42	1.13	47.46	105
512-TG005	45	31	41	1.13	46.33	103
512-TG003	45	48	42	1.13	47.46	105
512-TG004	45	48	42	1.13	47.46	105
512-TG002	45	48	41	1.13	46.33	103
512-TG001	45	64	43	1.13	48.59	108
513-TG018	45	58	43	1.13	48.59	108
513-TG017	45	72	42	1.13	47.46	105
513-TG016	45	84	43	1.13	48.59	108
513-TG012	45	77	41	1.13	46.33	103
513-TG013	45	62	40	1.13	45.20	100
513-TG015	45	81	41	1.13	46.33	103
513-TG014	45	79	41	1.13	46.33	103
513-TG009	62	132	58	1.13	65.54	106
513-TG010	59	149	56	1.13	63.28	107

Remarks:

Instrument Used: HV12/15

Date: 11/9/14	Engineer: Stephen Murdoch & Gregor Fulton	Sheet 9 of 12

LEVEL 6 ZONE E

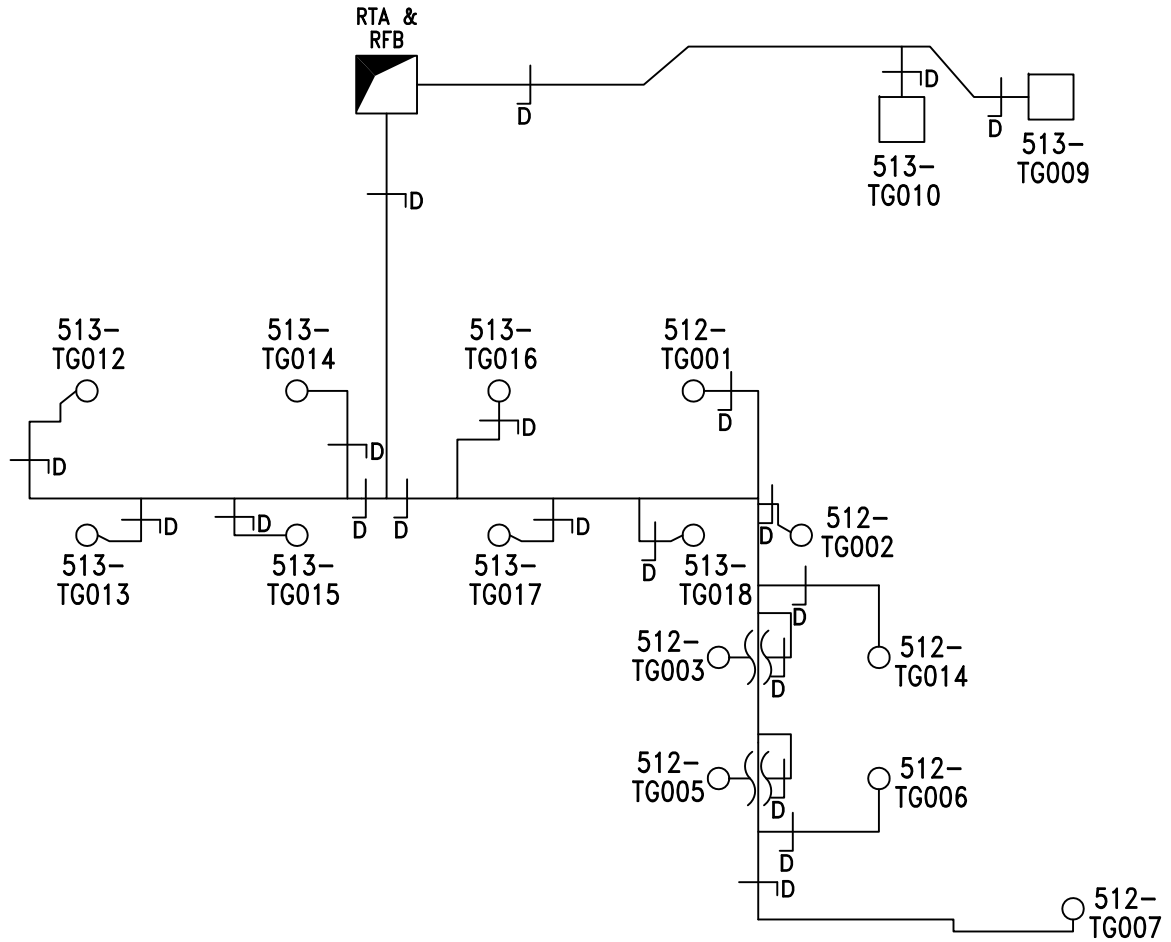

H&V Commissioning Services Limited **Kilknowe Office** **16 Barrmill Road** **Galston** **East Ayrshire, KA4 8HH** **Tel : 01563 821991** **Fax: 01563 822220** **email: talk2us@handv.co.uk**	**CONTRACT:** **NSGH, ADULT & CHILDREN'S HOSPITAL - PLANTROOM 121** **CLIENT:** **MERCURY ENGINEERING UK**	**TITLE:** **SCHEMATIC LAYOUT OF** **121-AHU05 DIRTY EXTRACT LEVEL 6**	**DRAWN:** LH/DG **DATE:** 10/07/15 **DRG No.:** 5902/V57 **SHEET:** 10 OF 12

Design Data		Initial Test Data		Final Test & Regulation Data		
Terminal or Ref No	Design Air Volume l/s	Balometer Initial Air Volume l/s	Balometer Final Air Volume l/s	Balometer Factor	Balometer Final Air Volume l/s	% Design
LEVEL 5						
512-TG007	35	26	31	1.13	35.03	100
512-TG006	45	32	41	1.13	46.33	103
512-TG005	45	28	40	1.13	45.20	100
512-TG003	45	52	40	1.13	45.20	100
512-TG004	45	55	40	1.13	45.20	100
512-TG002	45	59	41	1.13	46.33	103
512-TG001	45	69	41	1.13	46.33	103
513-TG018	45	73	40	1.13	45.20	100
513-TG017	45	75	40	1.13	45.20	100
513-TG016	45	81	40	1.13	45.20	100
513-TG012	45	66	40	1.13	45.20	100
513-TG013	45	83	40	1.13	45.20	100
513-TG015	45	100	40	1.13	45.20	100
513-TG014	45	80	40	1.13	45.20	100
513-TG009	62	137	56	1.13	63.28	102
513-TG010	59	159	54	1.13	61.02	103

Remarks:

Instrument Used: HV12/15

Date: 11/9/14	Engineer: Stephen Murdoch & Gregor Fulton	Sheet 11 of 12

LEVEL 5 ZONE E

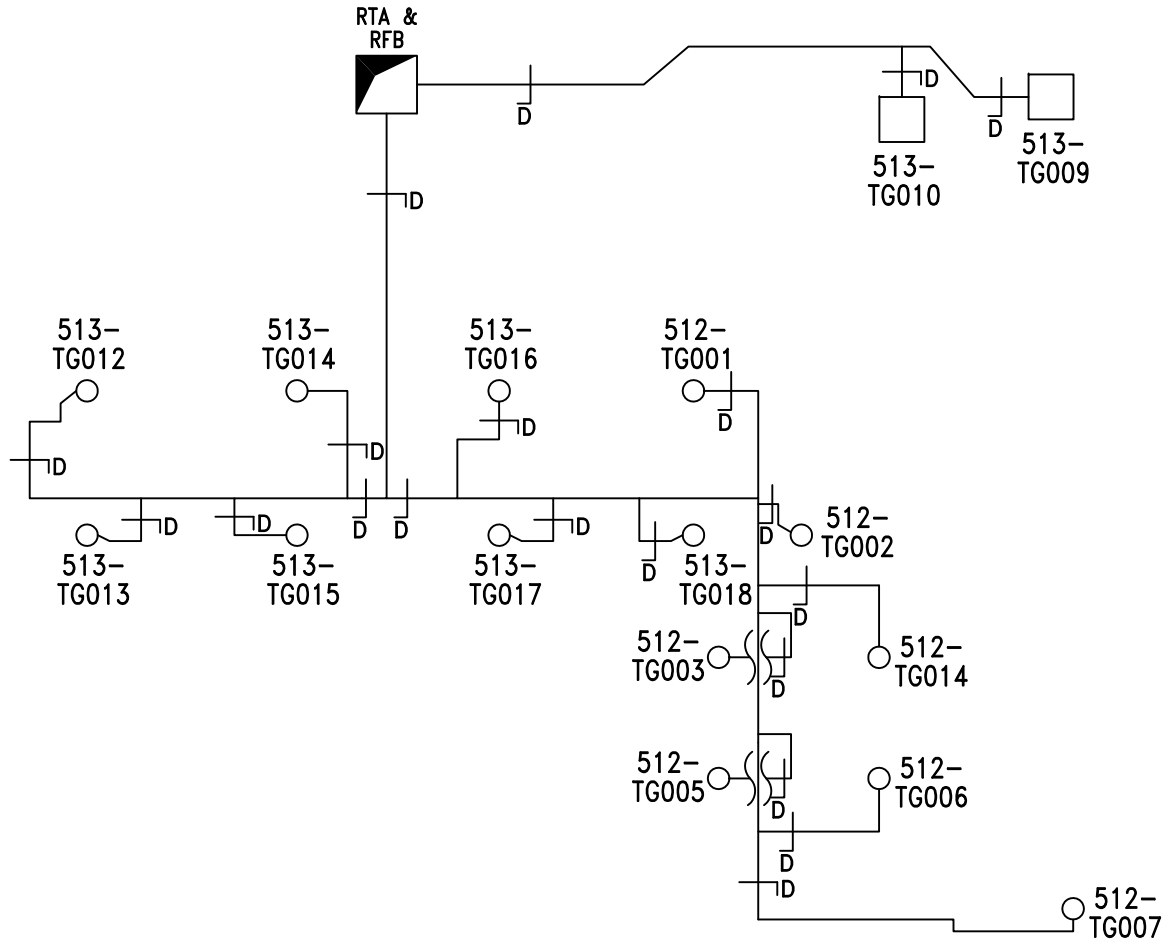

H&V Commissioning Services Limited
Kilknowe Office
16 Barrmill Road
Galston
East Ayrshire, KA4 8HH
Tel : 01563 821991
Fax: 01563 822220
email: talk2us@handv.co.uk

CONTRACT:
NSGH, ADULT & CHILDREN'S HOSPITAL - PLANTROOM 121

CLIENT:
MERCURY ENGINEERING UK

TITLE:
SCHEMATIC LAYOUT OF

121-AHU05 DIRTY EXTRACT LEVEL 5

DRAWN: LH/DG

DATE: 10/07/15

DRG No.: 5902/V56

SHEET: 12 OF 12

H & V
H & V
H & V

Commissioning Services Ltd
EST: 1975

Kilknowe Office,
16 Barrmill Road,
Galston,
Ayrshire, KA48HH.
TEL N°. 01563 821991
FAX N°. 01563 822220
E-Mail: talk2us@handv.co.uk

CONTRACT: NSGH, ADULT & CHILDRENS HOSPITAL – PLANTROOM 121

SYSTEM: 121 – AHU 06 SUPPLY (4TH TO 7TH FLOOR WARDS)

WITNESSING OF TESTING AND BALANCING

	Client Representative / Commissioning Manager	Client
Witnessed By:	David Wilson	
Representing:	Brookfield Multiplex	
Signature:	[redacted]	
Date:	17/12/14	
Witnessed By:		
Representing:		
Signature:		
Date:		

Remarks:

H & V
H & V
H & V

Commissioning Services Ltd
EST: 1975

Kilknowe Office,
16 Barrmill Road,
Galston,
Ayrshire, KA48HH.
TEL N°. 01563 821991
FAX N°. 01563 822220
E-Mail: talk2us@handv.co.uk

CONTRACT: NSGH, ADULT & CHILDRENS HOSPITAL – PLANTROOM 121

SYSTEM: 121 – AHU 06 SUPPLY (4TH TO 7TH FLOOR WARDS)

	AIR SYSTEMS PRE COMMISSIONING SHEET	✓	X	N/A
1.	Check AHU for damage and that all the components are secure	✓		
2.	Check the transit straps have been removed, if applicable	✓		
3.	Check pulleys are secure, tight, aligned and belts are correctly tensioned, if applicable	✓		
4.	Check with the controls engineer that the system is available to run and that plant rotation is correct	✓		
5.	Check all ductwork/air terminals are fitted and that air regulating dampers are open	✓		
6.	Check louvres are fitted and clear from obstructions, if applicable	✓		
7.	Check fire dampers are open, if applicable	✓		
8.	Check the motor overloads are suitable and set			✓
9.	Check VAV or CAV boxes are installed correctly and ready for use.			✓
10.	Check the floor plenums are complete, if applicable			✓
11.	Complete commissioning test sheets.	✓		

COMMENTS

Standby inverter not powered at time of balance.

H & V
H & V
H & V

Commissioning Services Ltd
EST: 1975

Kilknowe Office,
16 Barrmill Road,
Galston,
Ayshire, KA48HH.
TEL N°. 01563 821991
FAX N°. 01563 822220
E-Mail: talk2us@handv.co.uk

CONTRACT: NSGH, ADULT & CHILDRENS HOSPITAL – PLANTROOM 121

AHU TEST SHEET

SYSTEM: 121 – AHU 06 SUPPLY (4TH TO 7TH FLOOR WARDS)

AHU											
AHU Manufacturer			Barkell		Fan Size			500			
Fan Manufacturer			Comefri		AHU Serial No			OP1B3058030			
Fan Type			Centrifugal		AHU Model N°.			TZAF 500 RFF			
			Design		**Test**					**% Design**	
Air Volume		(L/S)	2936		3150					107	
External Static Pressure		(Pa)	460		Inlet	82	Outlet	222	Total	304	
Fan Rotational Speed		(R.P.M)	1538		1323						
Filter Test Data	Pre Filter	(Pa)	Inlet	*	Outlet	*			ΔP	*40	
	Sec Filter	(Pa)	Inlet	*	Outlet	*			ΔP	*150	
MOTOR											
Manufacturer			TEC		Output kW			5.5			
Serial N°			1306-1198289		Motor Full Load Current			10.9	Amps		
Voltage			400		Motor Running Current			7.4	Amps		
			Design		**Test**						
Rotational Speed.			1450		1247						
DRIVE DETAILS											
Motor Pulley/Shaft Size		(mm∅)	SPA 140	38	Motor Pulley Taper Lock Size			2012			
Fan Pulley/Shaft Size		(mm∅)	SPA 132	50	Fan Pulley Taper Lock Size			2517			
Belt Type/Size			XPA	1140	N°. Of Belts			4			
Shaft Centres mm			365		Adjustment			-	40	+	20 mm
Variable Speed Drive			Yes		Set Point			43 Hz			
STANDBY PLANT											
Test Air Volume	**	Inlet Pressure	**	Motor Rotational Speed	**	Motor Running Current					
% Design	**	Outlet Pressure	**	Fan Rotational Speed	**	** Amps					
Variable Speed Drive			**	Set Point	**						

Comments. 2nd Motor Serial Number – 1306-1198290

*Filter pressure taken from magnehelic gauges.

** Standby inverter not powered at time of balance.

Control static pressure sensor = 224 Pa.

Instrument Used (Ref N°.) HV03/1, HV03/4 & HV06/5

Date: 8/12/14	Engineer: Ross Parker & Daniel Kane	Sheet 3 of 14

H & V
H & V
H & V

Commissioning Services Ltd
EST: 1975

Kilknowe Office,
16 Barrmill Road,
Galston,
Ayshire, KA48HH.
TEL N°. 01563 821991
FAX N°. 01563 822220
E-Mail: talk2us@handv.co.uk

CONTRACT: NSGH, ADULT & CHILDRENS HOSPITAL – PLANTROOM 121

DUCT VOLUME TEST SHEET

SYSTEM: 121 – AHU 06 SUPPLY (4TH TO 7TH FLOOR WARDS)

VELOCITY PROFILE (taken facing air flow) **TEST HOLE LOCATION: LEVEL 8 RISER**

Test Hole Ref		Duct Dia (mm)		Duct Size (mm)		Duct Area		Design Air Volume		Design Air Velocity	
				Width x Height		M2		L/S		M/S	
TH Main				1000	750	0.7500		2936		3.91	
4.00	4.10	4.10	4.40	4.30	4.20						
4.00	4.50	4.40	4.50	4.50	3.60						
4.30	4.60	4.50	4.50	4.60	4.10						
4.10	4.60	4.50	4.40	4.20	4.00						
4.00	4.20	4.10	3.80	3.60	3.30						
Velocity Sub Totals											
20.40	22.00	21.60	21.60	21.20	19.20						

Total Velocity	Number of Readings	Average Velocity	Measured Air Volume	% Design	Static Pressure
M/S		M/S	L/S		Pa
126	30	4.20	3150	107	145

Remarks:

Instrument Used: HV03/1

Date: 8/12/14 | Engineer: Ross Parker & Daniel Kane | Sheet 4 of 14

H & V
H & V
H & V

Commissioning Services Ltd
EST: 1975

Kilknowe Office,
16 Barrmill Road,
Galston,
Ayshire, KA48HH.
TEL N°. 01563 821991
FAX N°. 01563 822220
E-Mail: talk2us@handv.co.uk

CONTRACT: NSGH, ADULT & CHILDRENS HOSPITAL – PLANTROOM 121

DUCT VOLUME TEST SHEET

SYSTEM: 121 – AHU 06 SUPPLY (4TH TO 7TH FLOOR WARDS)

VELOCITY PROFILE (taken facing air flow) **TEST HOLE LOCATION: CEILING VOID**

Test Hole Ref		Duct Dia (mm)		Duct Size (mm)		Duct Area		Design Air Volume		Design Air Velocity	
				Width x Height		M2		L/S		M/S	
TH1		150				0.0177		35		1.98	
1.80	1.80										
2.10	2.10										
2.30	2.20										
2.20	1.70										
Velocity Sub Totals											
8.40	7.80										

Total Velocity	Number of Readings	Average Velocity	Measured Air Volume	% Design	Static Pressure
M/S		M/S	L/S		Pa
16.2	8	2.03	35.8	102	10

Remarks: Test hole serves Grille 7-513-SG001. Test Volume 35.8 l/s ÷ Balometer Volume 34 l/s = 1.05 Factor.

Instrument Used: HV03/1

Date: 8/12/14 | Engineer: Ross Parker & Daniel Kane | Sheet 5 of 14

H & V
H & V
H & V

Commissioning Services Ltd

EST: 1975

Kilknowe Office,
16 Barrmill Road,
Galston,
Ayshire, KA48HH.
TEL N°. 01563 821991
FAX N°. 01563 822220
E-Mail: talk2us@handv.co.uk

CONTRACT: NSGH, ADULT & CHILDRENS HOSPITAL – PLANTROOM 121

GRILLE TEST SHEET

SYSTEM: 121 – AHU 06 SUPPLY (4TH TO 7TH FLOOR WARDS)

Design Data		Initial Test Data		Final Test & Regulation Data		
Terminal or Ref No	Design Air Volume l/s	Balometer Initial Air Volume l/s	Balometer Final Air Volume l/s	Balometer Factor	Balometer Final Air Volume l/s	% Design
LEVEL 4						
*SG001	39	30	39	1.05	40.95	105
*SG002	18	15	18	1.05	18.90	105
*SG003	47	43	48	1.05	50.40	107
*SG004	47	36	47	1.05	49.35	105
*SG005	49	50	50	1.05	52.50	107
**SG003	40	68	39	1.05	40.95	102
***SG008	40	54	40	1.05	42.00	105
***SG007	125	96	126	1.05	132.30	106
***SG006	125	94	125	1.05	131.25	105
***SG005	40	51	40	1.05	42.00	105
***SG004	35	48	37	1.05	38.85	111
***SG003	35	51	35	1.05	36.75	105
*SG006	46	54	47	1.05	49.35	107
***SG002	10	60	10	1.05	10.50	105
***SG001	40	71	42	1.05	44.10	110
**SG001	50	94	53	1.05	55.65	111
**SG002	17	25	17	1.05	17.85	105

Remarks * All grilles prefixed with 513-. ** All grilles prefixed with 512-. *** All grilles prefixed with 514-.

Instrument Used: HV01/15

Date: 8/12/14	Engineer: Ross Parker & Daniel Kane	Sheet 6 of 14

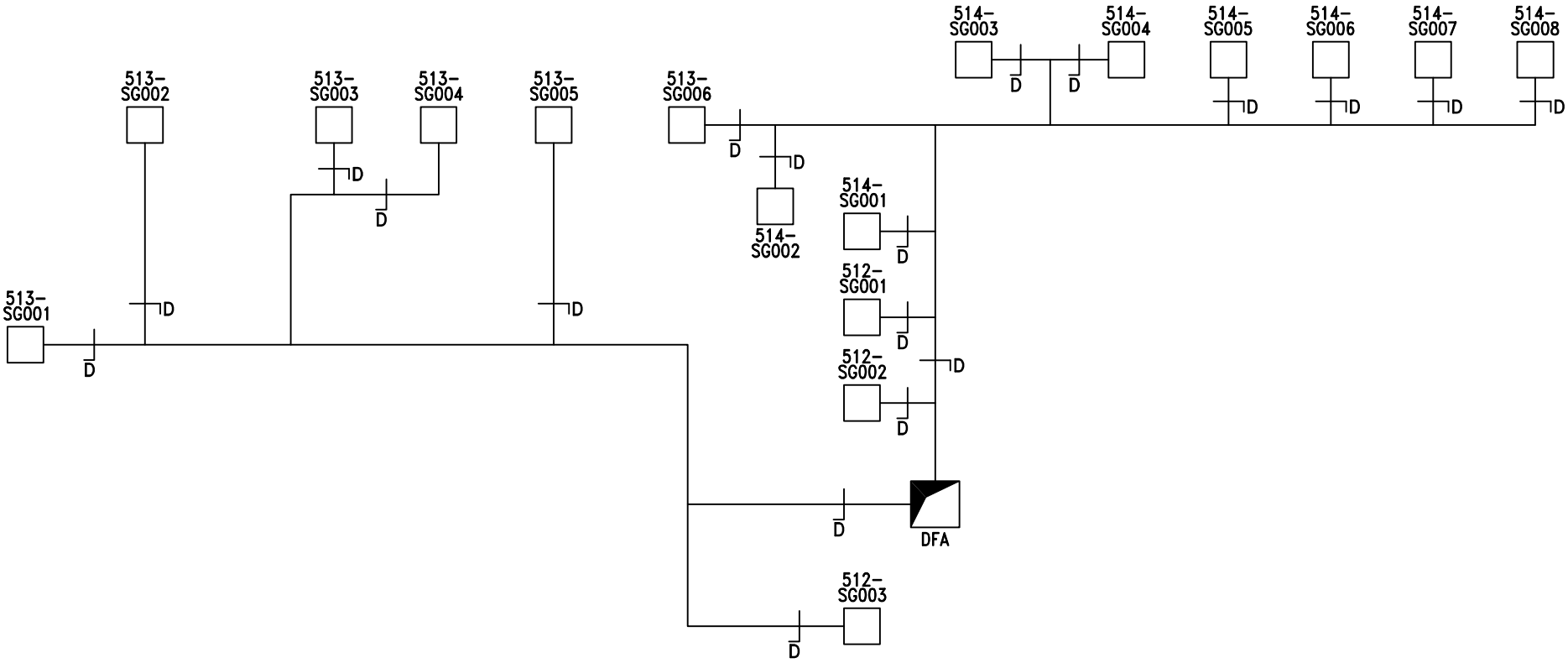

H&V Commissioning Services Limited
Kilknowe Office
16 Barrmill Road
Galston
East Ayrshire, KA4 8HH
Tel : 01563 821991
Fax: 01563 822220
email: talk2us@handv.co.uk

CONTRACT:
NSGH, ADULT & CHILDREN'S HOSPITAL - PLANTROOM 121

CLIENT:
MERCURY ENGINEERING UK

TITLE:
SCHEMATIC LAYOUT OF

121-AHU06 SUPPLY
(SERVING 4TH TO 7TH FLOOR WARDS)
LEVEL 4

DRAWN: KL/RP

DATE: 18/12/14

DRG No.: 5902/V21

SHEET: 7 OF 14

H & V
H & V
H & V

Commissioning Services Ltd
EST: 1975

Kilknowe Office,
16 Barrmill Road,
Galston,
Ayshire, KA48HH.
TEL N°. 01563 821991
FAX N°. 01563 822220
E-Mail: talk2us@handv.co.uk

CONTRACT: NSGH, ADULT & CHILDRENS HOSPITAL – PLANTROOM 121

GRILLE TEST SHEET

SYSTEM: 121 – AHU 06 SUPPLY (4TH TO 7TH FLOOR WARDS)

Design Data		Initial Test Data		Final Test & Regulation Data		
Terminal or Ref No	Design Air Volume l/s	Balometer Initial Air Volume l/s	Balometer Final Air Volume l/s	Balometer Factor	Balometer Final Air Volume l/s	% Design
LEVEL 5						
*SG001	35	32	34	1.05	35.70	102
*SG002	35	21	34	1.05	35.70	102
*SG003	33	37	35	1.05	36.75	111
*SG004	25	25	26	1.05	27.30	109
*SG005	78	80	82	1.05	86.10	110
*SG008	15	15	15	1.05	15.75	105
**SG004	60	133	63	1.05	66.15	110
*SG006	47	48	47	1.05	49.35	105
*SG007	49	54	49	1.05	51.45	105
***SG002	19	16	19	1.05	19.95	105
***SG001	45	52	46	1.05	48.30	107
***SG003	10	19	10	1.05	10.50	105
***SG005	50	51	49	1.05	51.45	103
***SG004	40	68	39	1.05	40.95	102
**SG001	60	92	59	1.05	61.95	103
**SG002	90	174	89	1.05	93.45	104
**SG003	20	41	21	1.05	22.05	110

Remarks * All grilles prefixed with 513-. ** All grilles prefixed with 512-. *** All grilles prefixed with 514-.

Instrument Used: HV01/15

Date: 8/12/14	Engineer: Ross Parker & Daniel Kane	Sheet 8 of 14

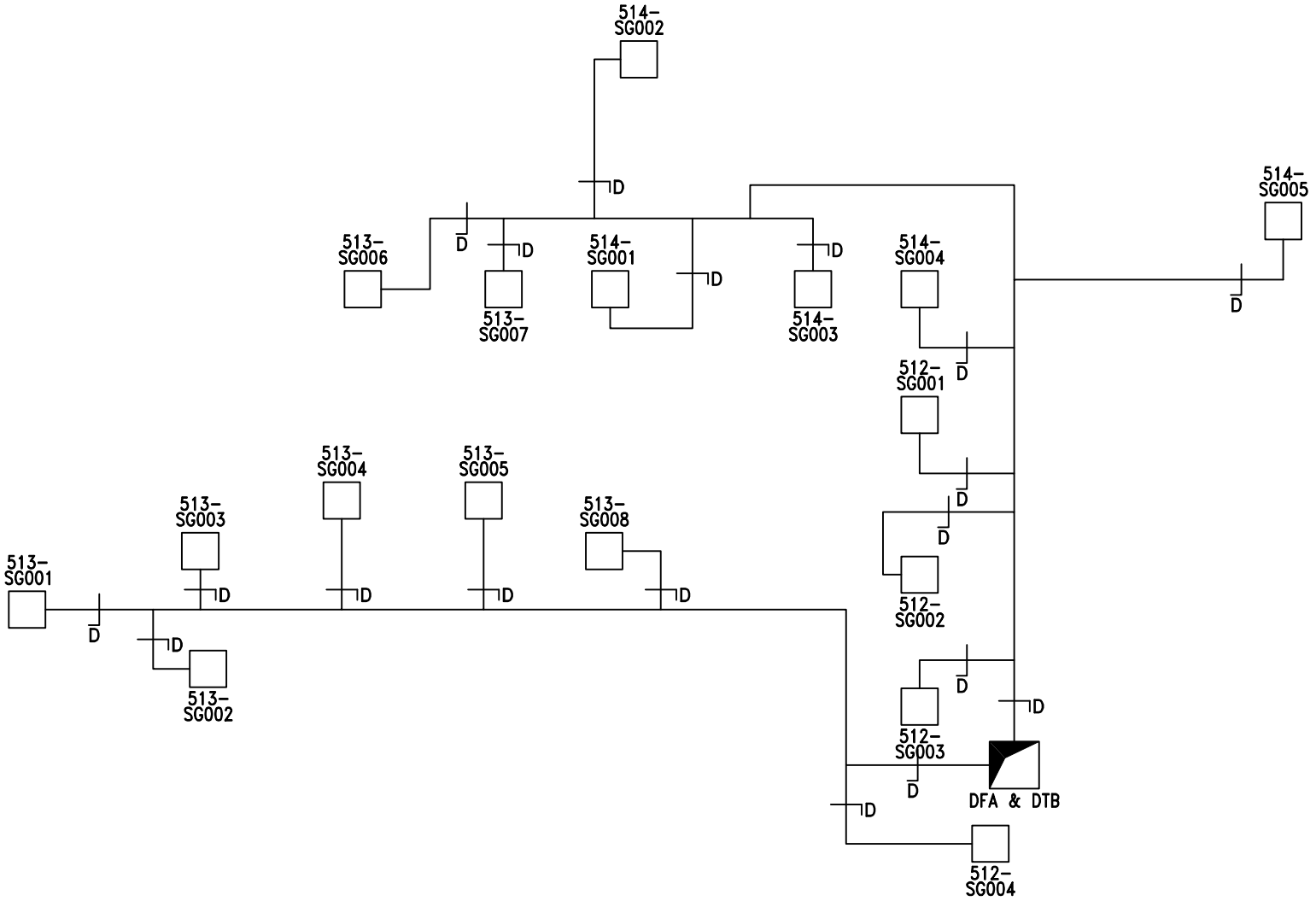

H&V Commissioning Services Limited
Kilknowe Office
16 Barrmill Road
Galston
East Ayrshire, KA4 8HH
Tel : 01563 821991
Fax: 01563 822220
email: talk2us@handv.co.uk

CONTRACT:
NSGH, ADULT & CHILDREN'S HOSPITAL - PLANTROOM 121

CLIENT:
MERCURY ENGINEERING UK

TITLE:
SCHEMATIC LAYOUT OF

121-AHU06 SUPPLY (SERVING 4TH TO 7TH FLOOR WARDS) LEVEL 5

DRAWN: KL/RP

DATE: 18/12/14

DRG No.: 5902/V22

SHEET: 9 OF 14

H & V
H & V
H & V

Commissioning Services Ltd
EST: 1975

Kilknowe Office,
16 Barrmill Road,
Galston,
Ayshire, KA48HH.
TEL N°. 01563 821991
FAX N°. 01563 822220
E-Mail: talk2us@handv.co.uk

CONTRACT: NSGH, ADULT & CHILDRENS HOSPITAL – PLANTROOM 121

GRILLE TEST SHEET

SYSTEM: 121 – AHU 06 SUPPLY (4TH TO 7TH FLOOR WARDS)

Design Data		Initial Test Data		Final Test & Regulation Data		
Terminal or Ref No	Design Air Volume l/s	Balometer Initial Air Volume l/s	Balometer Final Air Volume l/s	Balometer Factor	Balometer Final Air Volume l/s	% Design
LEVEL 6						
*SG001	35	24	35	1.05	36.75	105
*SG002	35	30	35	1.05	36.75	105
*SG003	33	39	32	1.05	33.60	102
*SG004	25	21	25	1.05	26.25	105
*SG005	78	87	79	1.05	82.95	106
*SG008	15	17	16	1.05	16.80	112
**SG004	60	121	59	1.05	61.95	103
*SG006	47	51	46	1.05	48.30	103
*SG007	49	45	50	1.05	52.50	107
***SG002	19	17	19	1.05	19.95	105
***SG001	45	61	45	1.05	47.25	105
***SG003	10	20	10	1.05	10.50	105
***SG005	50	52	52	1.05	54.60	109
***SG004	40	73	40	1.05	42.00	105
**SG001	60	114	63	1.05	66.15	110
**SG002	90	192	91	1.05	95.55	106
**SG003	20	54	21	1.05	22.05	110

Remarks * All grilles prefixed with 513-. ** All grilles prefixed with 512-. *** All grilles prefixed with 514-.

Instrument Used: HV01/15

Date: 8/12/14	Engineer: Ross Parker & Daniel Kane	Sheet 10 of 14

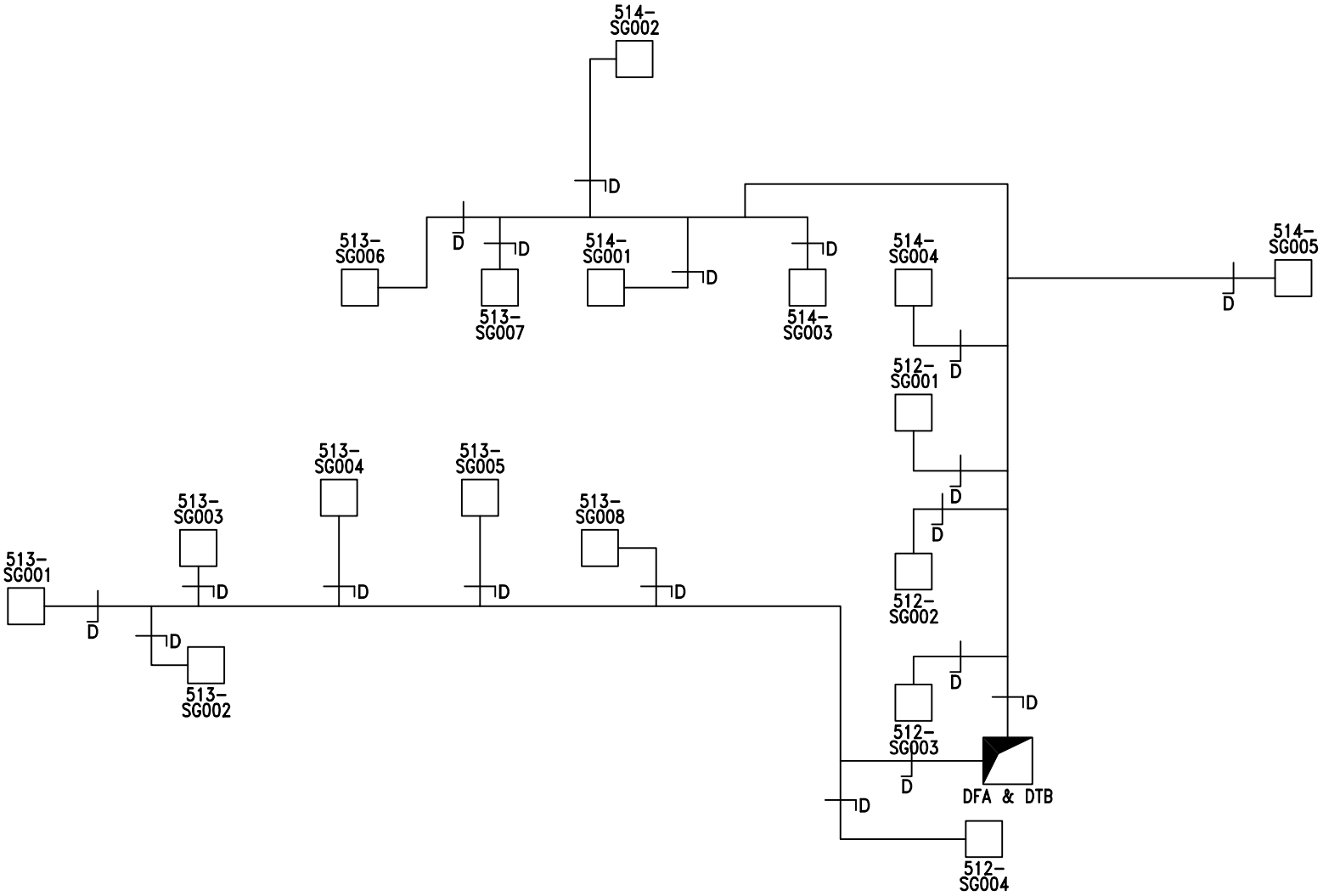

H&V Commissioning Services Limited
Kilknowe Office
16 Barrmill Road
Galston
East Ayrshire, KA4 8HH
Tel : 01563 821991
Fax: 01563 822220
email: talk2us@handv.co.uk

CONTRACT:
NSGH, ADULT & CHILDREN'S HOSPITAL - PLANTROOM 121

CLIENT:
MERCURY ENGINEERING UK

TITLE:
SCHEMATIC LAYOUT OF

121-AHU06 SUPPLY (SERVING 4TH TO 7TH FLOOR WARDS) LEVEL 6

DRAWN: KL/RP

DATE: 18/12/14

DRG No.: 5902/V23

SHEET: 11 OF 14

H & V
H & V
H & V

Commissioning Services Ltd
EST: 1975

Kilknowe Office,
16 Barrmill Road,
Galston,
Ayshire, KA48HH.
TEL N°. 01563 821991
FAX N°. 01563 822220
E-Mail: talk2us@handv.co.uk

CONTRACT: NSGH, ADULT & CHILDRENS HOSPITAL – PLANTROOM 121

GRILLE TEST SHEET

SYSTEM: 121 – AHU 06 SUPPLY (4TH TO 7TH FLOOR WARDS)

Design Data		Initial Test Data		Final Test & Regulation Data		
Terminal or Ref No	Design Air Volume l/s	Balometer Initial Air Volume l/s	Balometer Final Air Volume l/s	Balometer Factor	Balometer Final Air Volume l/s	% Design
LEVEL 7						
*SG001	35	26	34	1.05	35.70	102
*SG002	35	29	34	1.05	35.70	102
*SG003	33	39	34	1.05	35.70	108
*SG004	25	25	25	1.05	26.25	105
*SG005	78	85	80	1.05	84.00	108
*SG008	15	20	16	1.05	16.80	112
**SG004	60	128	59	1.05	61.95	103
*SG006	47	65	47	1.05	49.35	105
*SG007	49	50	49	1.05	51.45	105
***SG002	19	15		1.05	0.00	0
***SG001	45	52	46	1.05	48.30	107
***SG003	10	23	10	1.05	10.50	105
***SG005	50	48	51	1.05	53.55	107
***SG004	40	73	39	1.05	40.95	102
**SG001	60	97	63	1.05	66.15	110
**SG002	90	213	90	1.05	94.50	105
**SG003	20	56	20	1.05	21.00	105

Remarks * All grilles prefixed with 513-. ** All grilles prefixed with 512-. *** All grilles prefixed with 514-.

Instrument Used: HV01/15

Date: 8/12/14	Engineer: Ross Parker & Daniel Kane	Sheet 12 of 14

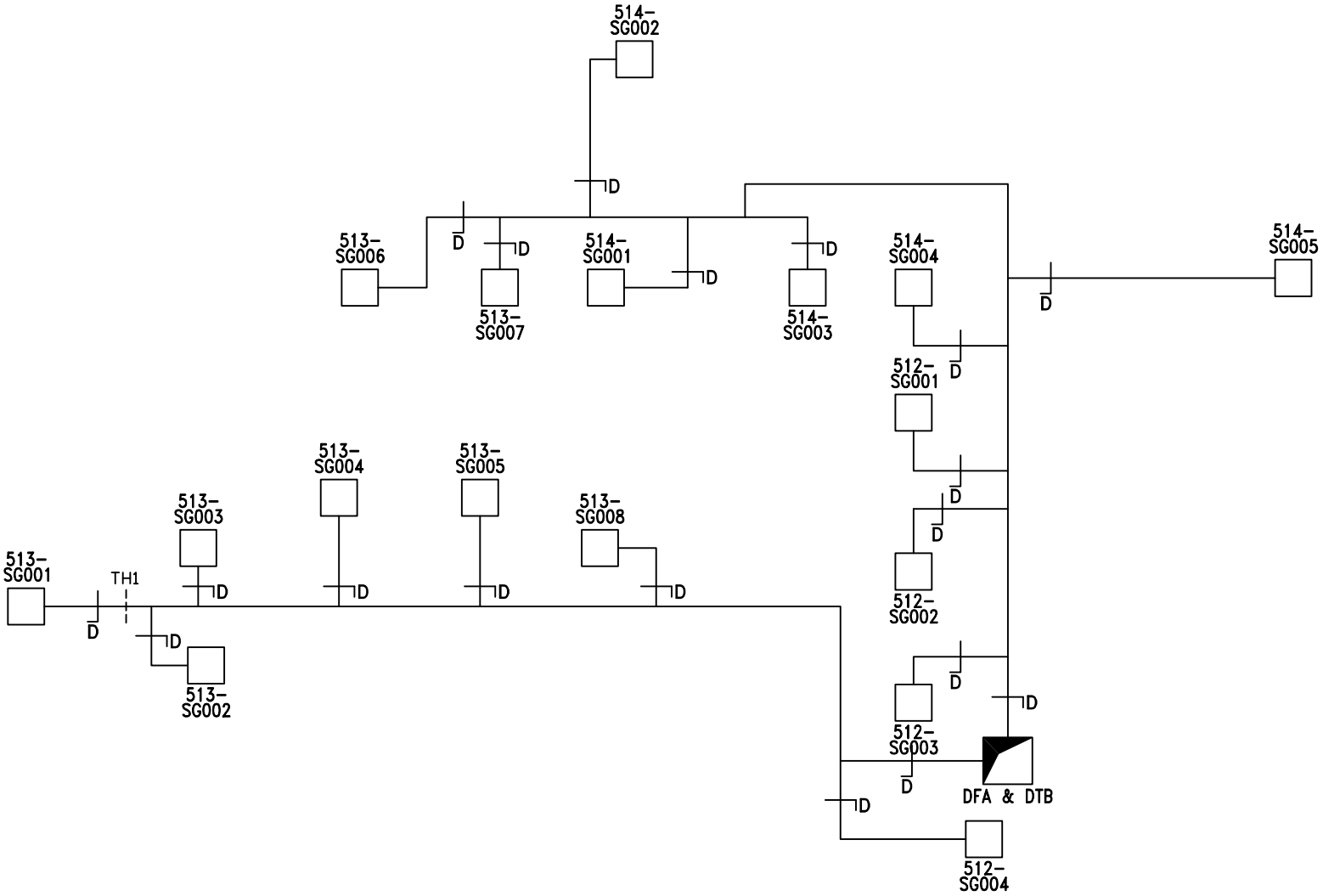

H&V Commissioning Services Limited
Kilknowe Office
16 Barrmill Road
Galston
East Ayrshire, KA4 8HH
Tel : 01563 821991
Fax: 01563 822220
email: talk2us@handv.co.uk

CONTRACT:
NSGH, ADULT & CHILDREN'S HOSPITAL - PLANTROOM 121

CLIENT:
MERCURY ENGINEERING UK

TITLE:
SCHEMATIC LAYOUT OF

121-AHU06 SUPPLY (SERVING 4TH TO 7TH FLOOR WARDS) LEVEL 7

DRAWN: KL/RP

DATE: 18/12/14

DRG No.: 5902/V24

SHEET: 13 OF 14

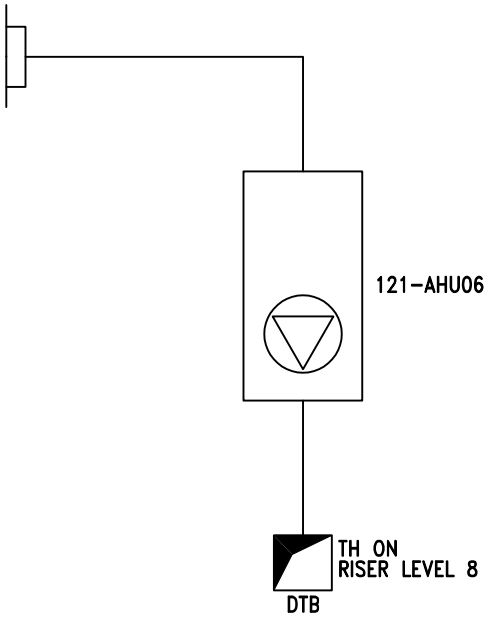

PLANTROOM 121 LEVEL 12

H&V Commissioning Services Limited
Kilknowe Office
16 Barrmill Road
Galston
East Ayrshire, KA4 8HH
Tel : 01563 821991
Fax: 01563 822220
email: talk2us@handv.co.uk

CONTRACT:
NSGH, ADULT & CHILDREN'S HOSPITAL - PLANTROOM 121

CLIENT:
MERCURY ENGINEERING UK

TITLE:
SCHEMATIC LAYOUT OF

121-AHU06 SUPPLY
(SERVING 4TH TO 7TH FLOOR WARDS)
PLANTROOM 121

DRAWN: KL/RP

DATE: 18/12/14

DRG No.: 5902/V25

SHEET: 14 OF 14

H & V
H & V
H & V

Commissioning Services Ltd
EST: 1975

Kilknowe Office,
16 Barrmill Road,
Galston,
Ayrshire, KA48HH.
TEL N°. 01563 821991
FAX N°. 01563 822220
E-Mail: talk2us@handv.co.uk

CONTRACT: NSGH, ADULT & CHILDRENS HOSPITAL – PLANTROOM 121

SYSTEM: 121 – AHU 06 EXTRACT (4TH TO 7TH FLOOR WARDS)

WITNESSING OF TESTING AND BALANCING

	Client Representative / Commissioning Manager	Client
Witnessed By:	David Wilson	
Representing:	Brookfield Multiplex	
Signature:	[redacted]	
Date:	17/12/14	
Witnessed By:		
Representing:		
Signature:		
Date:		

Remarks:

H & V
H & V
H & V

Commissioning Services Ltd
EST: 1975

Kilknowe Office,
16 Barrmill Road,
Galston,
Ayrshire, KA48HH.
TEL N°. 01563 821991
FAX N°. 01563 822220
E-Mail: talk2us@handv.co.uk

CONTRACT: NSGH, ADULT & CHILDRENS HOSPITAL – PLANTROOM 121

SYSTEM: 121 – AHU 06 EXTRACT (4TH TO 7TH FLOOR WARDS)

	AIR SYSTEMS PRE COMMISSIONING SHEET	✓	X	N/A
1.	Check AHU for damage and that all the components are secure	✓		
2.	Check the transit straps have been removed, if applicable	✓		
3.	Check pulleys are secure, tight, aligned and belts are correctly tensioned, if applicable	✓		
4.	Check with the controls engineer that the system is available to run and that plant rotation is correct	✓		
5.	Check all ductwork/air terminals are fitted and that air regulating dampers are open	✓		
6.	Check louvres are fitted and clear from obstructions, if applicable	✓		
7.	Check fire dampers are open, if applicable	✓		
8.	Check the motor overloads are suitable and set			✓
9.	Check VAV or CAV boxes are installed correctly and ready for use.			✓
10.	Check the floor plenums are complete, if applicable			✓
11.	Complete commissioning test sheets.	✓		

COMMENTS

H & V
H & V
H & V

Commissioning Services Ltd
EST: 1975

Kilknowe Office,
16 Barrmill Road,
Galston,
Ayshire, KA48HH.
TEL N°. 01563 821991
FAX N°. 01563 822220
E-Mail: talk2us@handv.co.uk

CONTRACT: NSGH, ADULT & CHILDRENS HOSPITAL – PLANTROOM 121

AHU TEST SHEET

SYSTEM: 121 – AHU 06 EXTRACT (4TH TO 7TH FLOOR WARDS)

AHU											
AHU Manufacturer			Barkell		Fan Size			400			
Fan Manufacturer			Comefri		AHU Serial No			OPI3058028			
Fan Type			Centrifugal		AHU Model N°.			TZAF 400 RFF			
			Design		**Test**					**% Design**	
Air Volume		(L/S)	2027		2165					107	
External Static Pressure		(Pa)	480		Inlet	190	Outlet	87	Total	277	
Fan Rotational Speed		(R.P.M)	1793		1578						
Filter Test Data	Pre Filter	(Pa)	Inlet	*	Outlet	*			ΔP	*25	
	Sec Filter	(Pa)	Inlet	N/A	Outlet	N/A			ΔP	N/A	

MOTOR				
Manufacturer	TEC	Output kW	3.0	
Serial N°	1305-0265044	Motor Full Load Current	6.52	Amps
Voltage	400	Motor Running Current	4.8	Amps
	Design	**Test**		
Rotational Speed.	1440	1267		

DRIVE DETAILS									
Motor Pulley/Shaft Size	(mm∅)	SPZ 132 x 1	28	Motor Pulley Taper Lock Size	1610				
Fan Pulley/Shaft Size	(mm∅)	SPZ 106 x 2	38	Fan Pulley Taper Lock Size	1610				
Belt Type/Size		XPZ	962	N°. Of Belts	2				
Shaft Centres mm		295		Adjustment	-	35	+	25	mm
Variable Speed Drive		Yes		Set Point	44 Hz				

STANDBY PLANT							
Test Air Volume	2165	Inlet Pressure	190	Motor Rotational Speed	1267	Motor Running Current	
% Design	107	Outlet Pressure	87	Fan Rotational Speed	1578	4.8	Amps
Variable Speed Drive			Yes	Set Point	44 Hz		

Comments.

N/A – Not Applicable

2nd Motor Serial Number: 1305-0265036.

*Filter pressure taken from magnehelic gauges.

Instrument Used (Ref N°.) HV04/1, HV03/4 & HV06/5

Date: 26/9/14	Engineer: Ross Parker & Stephen Cargill	Sheet 3 of 14

H & V
H & V
H & V

Commissioning Services Ltd
EST: 1975

Kilknowe Office,
16 Barrmill Road,
Galston,
Ayshire, KA48HH.
TEL N°. 01563 821991
FAX N°. 01563 822220
E-Mail: talk2us@handv.co.uk

CONTRACT: NSGH, ADULT & CHILDRENS HOSPITAL – PLANTROOM 121

DUCT VOLUME TEST SHEET

SYSTEM: 121 – AHU 06 EXTRACT (4TH TO 7TH FLOOR WARDS)

VELOCITY PROFILE (taken facing air flow) **TEST HOLE LOCATION: PLANTROOM 121**

Test Hole Ref		Duct Dia (mm)		Duct Size (mm)		Duct Area		Design Air Volume		Design Air Velocity	
				Width x Height		M2		L/S		M/S	
TH Main				700	750	0.5250		2027		3.86	
3.00	4.00	3.90	4.00	3.90							
4.20	4.40	4.50	4.40	4.10							
3.00	4.40	4.60	4.50	4.20							
3.90	4.40	4.50	4.60	4.20							
3.70	4.10	4.20	4.30	4.10							
Velocity Sub Totals											
17.80	21.30	21.70	21.80	20.50							

Total Velocity	Number of Readings	Average Velocity	Measured Air Volume	% Design	Static Pressure
M/S		M/S	L/S		Pa
103.1	25	4.12	2165	107	144

Remarks:

Instrument Used: HV04/1

Date: 26/9/14 | Engineer: Ross Parker & Stephen Cargill | Sheet 4 of 14

H & V
H & V
H & V

Commissioning Services Ltd
EST: 1975

Kilknowe Office,
16 Barrmill Road,
Galston,
Ayshire, KA48HH.
TEL N°. 01563 821991
FAX N°. 01563 822220
E-Mail: talk2us@handv.co.uk

CONTRACT: NSGH, ADULT & CHILDRENS HOSPITAL – PLANTROOM 121

DUCT VOLUME TEST SHEET

SYSTEM: 121 – AHU 06 EXTRACT (4TH TO 7TH FLOOR WARDS)

VELOCITY PROFILE (taken facing air flow) **TEST HOLE LOCATION: CEILING VOID**

Test Hole Ref		Duct Dia (mm)		Duct Size (mm)		Duct Area		Design Air Volume		Design Air Velocity	
				Width x Height		M2		L/S		M/S	
TH1		315				0.0779		150		1.92	
2.00	1.90										
1.90	2.00										
1.90	2.00										
1.80	2.10										
2.10	1.90										
1.90	1.90										
Velocity Sub Totals											
11.60	11.80										

Total Velocity	Number of Readings	Average Velocity	Measured Air Volume	% Design	Static Pressure
M/S		M/S	L/S		Pa
23.4	12	1.95	152	101	8

Remarks: Test hole serves Grille 7-513-EG001. Test Volume 152 l/s ÷ Balometer Volume 132 l/s = 1.15 Factor.

Instrument Used: HV04/1

Date: 26/9/14 | Engineer: Ross Parker & Stephen Cargill | Sheet 5 of 14

H & V
H & V
H & V

Commissioning Services Ltd

EST: 1975

Kilknowe Office,
16 Barrmill Road,
Galston,
Ayrshire, KA48HH.
TEL N°. 01563 821991
FAX N°. 01563 822220
E-Mail: talk2us@handv.co.uk

CONTRACT: NSGH, ADULT & CHILDRENS HOSPITAL – PLANTROOM 121

GRILLE TEST SHEET

SYSTEM: 121 – AHU 06 EXTRACT (4TH TO 7TH FLOOR WARDS)

Design Data		Initial Test Data		Final Test & Regulation Data		
Terminal or Ref No	Design Air Volume l/s	Balometer Initial Air Volume l/s	Balometer Final Air Volume l/s	Balometer Factor	Balometer Final Air Volume l/s	% Design
LEVEL 7						
*EG001	54	45	48	1.15	55.20	102
**EG001	60	48	52	1.15	59.80	100
**EG002	90	89	79	1.15	90.85	101
***EG001	150	51	132	1.15	151.80	101
***EG002	65	34	57	1.15	65.55	101
**EG004	10	15	9	1.15	10.35	104
**EG003	20	31	18	1.15	20.70	104

Remarks: *All grilles prefixed with 514-. **All grilles prefixed with 512-. *** All grilles prefixed with 513-.

Instrument Used: HV01/15

Date: 26/9/14	Engineer: Ross Parker & Stephen Cargill	Sheet 6 of 14

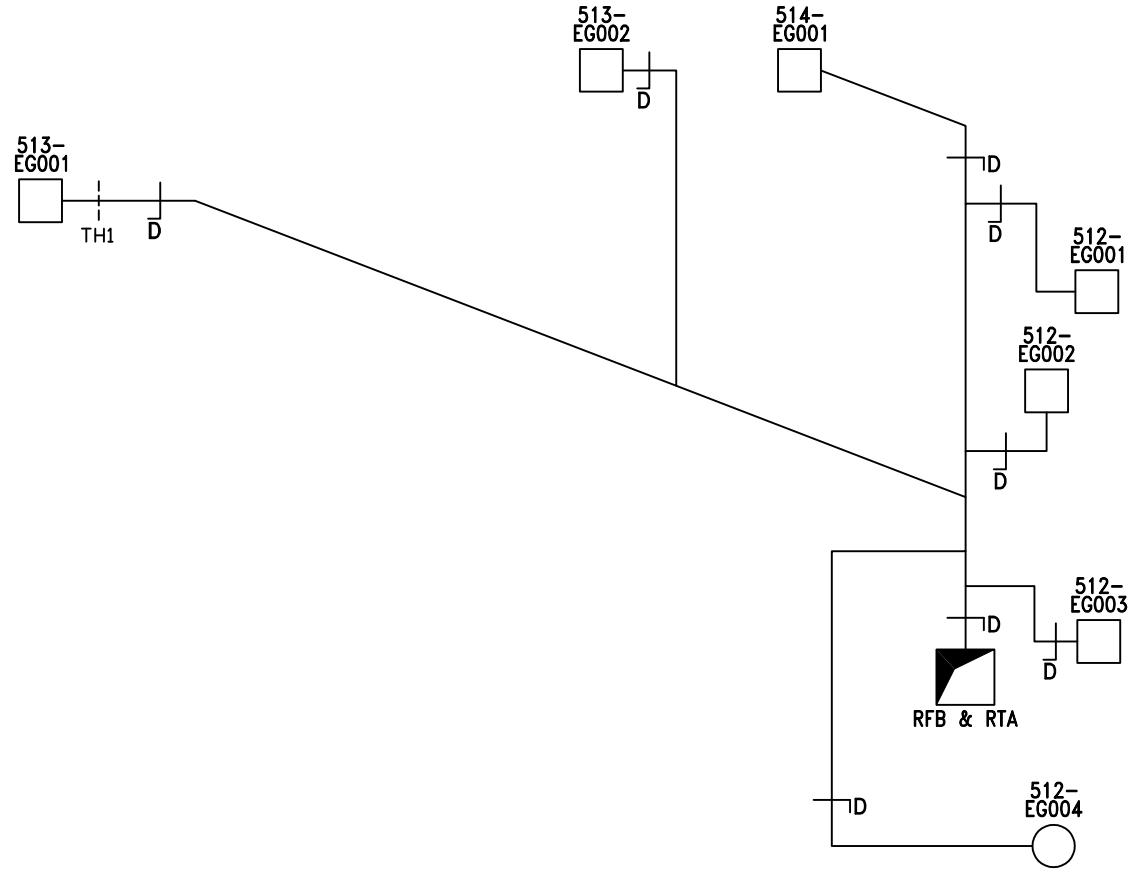

LEVEL 7 ZONE E

H&V Commissioning Services Limited
Kilknowe Office
16 Barrmill Road
Galston
East Ayrshire, KA4 8HH
Tel : 01563 821991
Fax: 01563 822220
email: talk2us@handv.co.uk

CONTRACT:
NSGH, ADULT & CHILDREN'S HOSPITAL - PLANTROOM 121

CLIENT:
MERCURY ENGINEERING UK

TITLE:
SCHEMATIC LAYOUT OF

121-AHU06 EXTRACT (SERVING 4TH TO 7TH FLOOR WARDS) LEVEL 7

DRAWN: KL/RP

DATE: 18/12/14

DRG No.: 5902/V26

SHEET: 7 OF 14

H & V
H & V
H & V

Commissioning Services Ltd
EST: 1975

Kilknowe Office,
16 Barrmill Road,
Galston,
Ayrshire, KA48HH.
TEL N°. 01563 821991
FAX N°. 01563 822220
E-Mail: talk2us@handv.co.uk

CONTRACT: NSGH, ADULT & CHILDRENS HOSPITAL – PLANTROOM 121

GRILLE TEST SHEET

SYSTEM: 121 – AHU 06 EXTRACT (4TH TO 7TH FLOOR WARDS)

Design Data		Initial Test Data		Final Test & Regulation Data		
Terminal or Ref No	Design Air Volume l/s	Balometer Initial Air Volume l/s	Balometer Final Air Volume l/s	Balometer Factor	Balometer Final Air Volume l/s	% Design
LEVEL 6						
*EG001	54	45	47	1.15	54.05	100
**EG001	60	56	55	1.15	63.25	105
**EG002	90	90	79	1.15	90.85	101
***EG001	150	60	135	1.15	155.25	104
***EG002	65	30	57	1.15	65.55	101
**EG004	10	11	9	1.15	10.35	104
**EG003	20	44	18	1.15	20.70	104

Remarks: *All grilles prefixed with 514-. **All grilles prefixed with 513-. *** All grilles prefixed with 512-.

Instrument Used: HV01/15

Date: 26/9/14	Engineer: Ross Parker & Stephen Cargill	Sheet 8 of 14

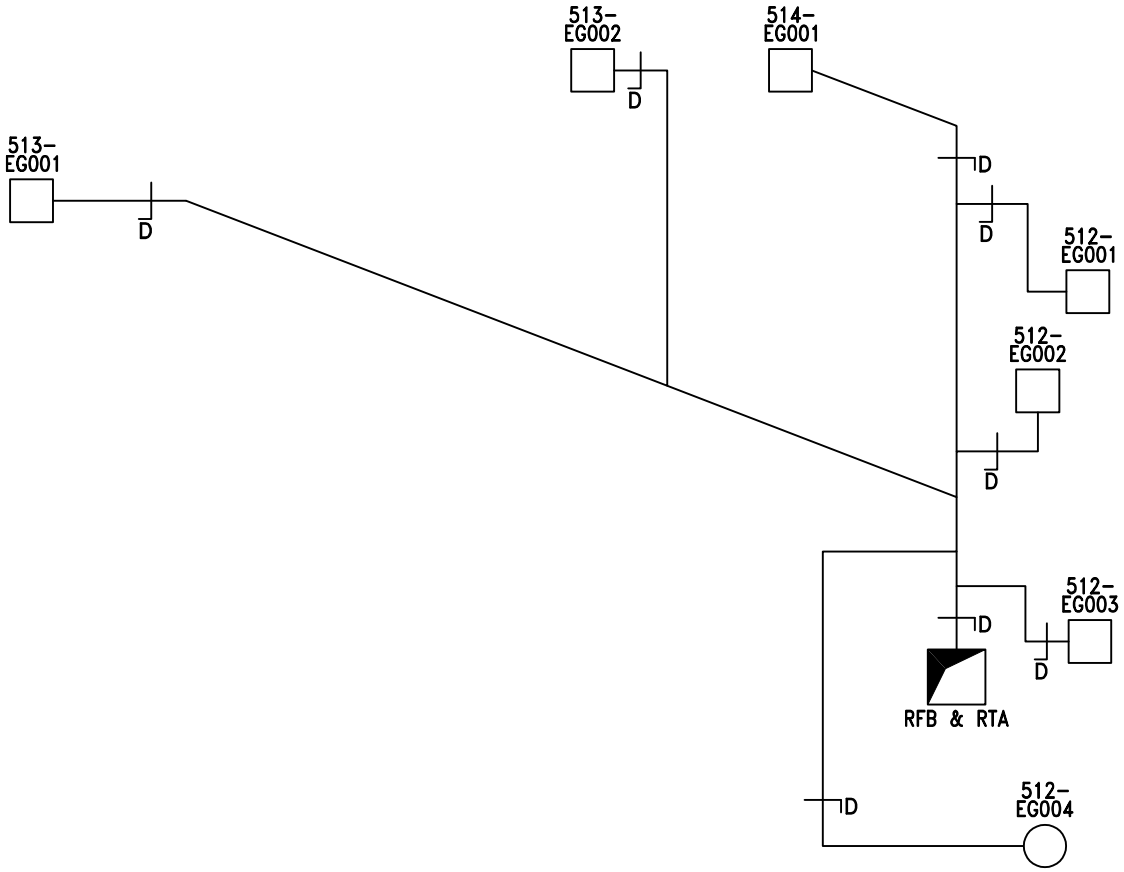

LEVEL 6 ZONE E

H&V Commissioning Services Limited
Kilknowe Office
16 Barrmill Road
Galston
East Ayrshire, KA4 8HH
Tel : 01563 821991
Fax: 01563 822220
email: talk2us@handv.co.uk

CONTRACT:
NSGH, ADULT & CHILDREN'S HOSPITAL - PLANTROOM 121

CLIENT:
MERCURY ENGINEERING UK

TITLE:
SCHEMATIC LAYOUT OF

121-AHU06 EXTRACT (SERVING 4TH TO 7TH FLOOR WARDS) LEVEL 6

DRAWN: KL/RP

DATE: 18/12/14

DRG No.: 5902/V27

SHEET: 9 OF 14

H & V
H & V
H & V

Commissioning Services Ltd
EST: 1975

Kilknowe Office,
16 Barrmill Road,
Galston,
Ayrshire, KA48HH.
TEL N°. 01563 821991
FAX N°. 01563 822220
E-Mail: talk2us@handv.co.uk

CONTRACT: NSGH, ADULT & CHILDRENS HOSPITAL – PLANTROOM 121

GRILLE TEST SHEET

SYSTEM: 121 – AHU 06 EXTRACT (4TH TO 7TH FLOOR WARDS)

Design Data		Initial Test Data		Final Test & Regulation Data		
Terminal or Ref No	Design Air Volume l/s	Balometer Initial Air Volume l/s	Balometer Final Air Volume l/s	Balometer Factor	Balometer Final Air Volume l/s	% Design
LEVEL 5						
*EG001	54	45	47	1.15	54.05	100
**EG001	60	46	52	1.15	59.80	100
**EG002	90	84	79	1.15	90.85	101
***EG001	150	56	130	1.15	149.50	100
***EG002	65	34	57	1.15	65.55	101
**EG004	10	10	9	1.15	10.35	104
**EG003	20	14	18	1.15	20.70	104

Remarks: *All grilles prefixed with 514-. **All grilles prefixed with 512-. *** All grilles prefixed with 513-.

Instrument Used: HV01/15

Date: 26/9/14	Engineer: Ross Parker & Stephen Cargill	Sheet 10 of 14

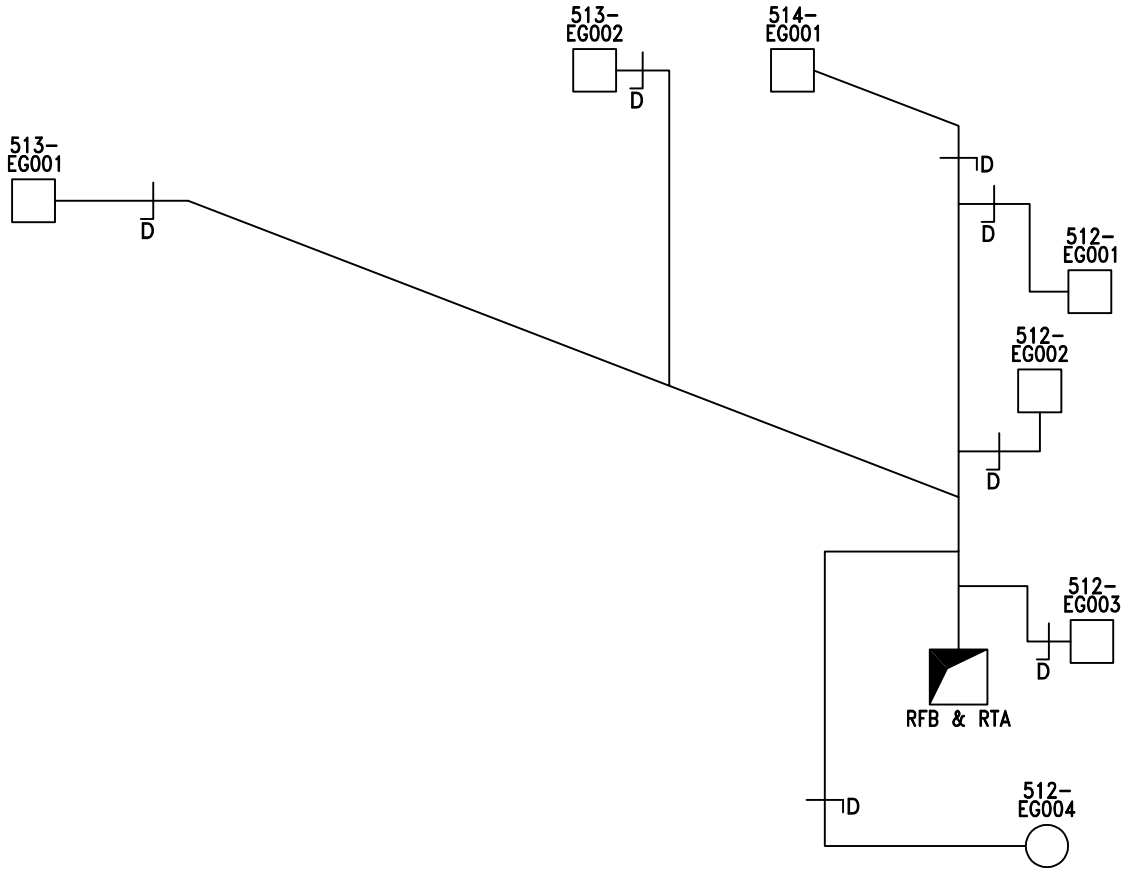

LEVEL 5 ZONE E

H&V Commissioning Services Limited
Kilknowe Office
16 Barrmill Road
Galston
East Ayrshire, KA4 8HH
Tel : 01563 821991
Fax: 01563 822220
email: talk2us@handv.co.uk

CONTRACT:
NSGH, ADULT & CHILDREN'S HOSPITAL - PLANTROOM 121

CLIENT:
MERCURY ENGINEERING UK

TITLE:
SCHEMATIC LAYOUT OF

121-AHU06 EXTRACT (SERVING 4TH TO 7TH FLOOR WARDS) LEVEL 5

DRAWN: KL/RP

DATE: 18/12/14

DRG No.: 5902/V28

SHEET: 11 OF 14

H & V
H & V
H & V

Commissioning Services Ltd
EST: 1975

Kilknowe Office,
16 Barrmill Road,
Galston,
Ayrshire, KA48HH.
TEL N°. 01563 821991
FAX N°. 01563 822220
E-Mail: talk2us@handv.co.uk

CONTRACT: NSGH, ADULT & CHILDRENS HOSPITAL – PLANTROOM 121

GRILLE TEST SHEET

SYSTEM: 121 – AHU 06 EXTRACT (4TH TO 7TH FLOOR WARDS)

Design Data		Initial Test Data		Final Test & Regulation Data		
Terminal or Ref No	Design Air Volume l/s	Balometer Initial Air Volume l/s	Balometer Final Air Volume l/s	Balometer Factor	Balometer Final Air Volume l/s	% Design
LEVEL 4						
*EG006	40	31	35	1.15	40.25	101
*EG005	125	110	110	1.15	126.50	101
*EG004	125	114	109	1.15	125.35	100
*EG003	40	41	35	1.15	40.25	101
*EG002	75	78	66	1.15	75.90	101
*EG001	75	74	66	1.15	75.90	101
**EG005	54	126	47	1.15	54.05	100
**EG007	56	90	50	1.15	57.50	103
***EG003	40	58	35	1.15	40.25	101

Remarks: *All grilles prefixed with 514-. **All grilles prefixed with 513-. *** All grilles prefixed with 512-.

Instrument Used: HV01/15

Date: 26/9/14	Engineer: Ross Parker & Stephen Cargill	Sheet 12 of 14

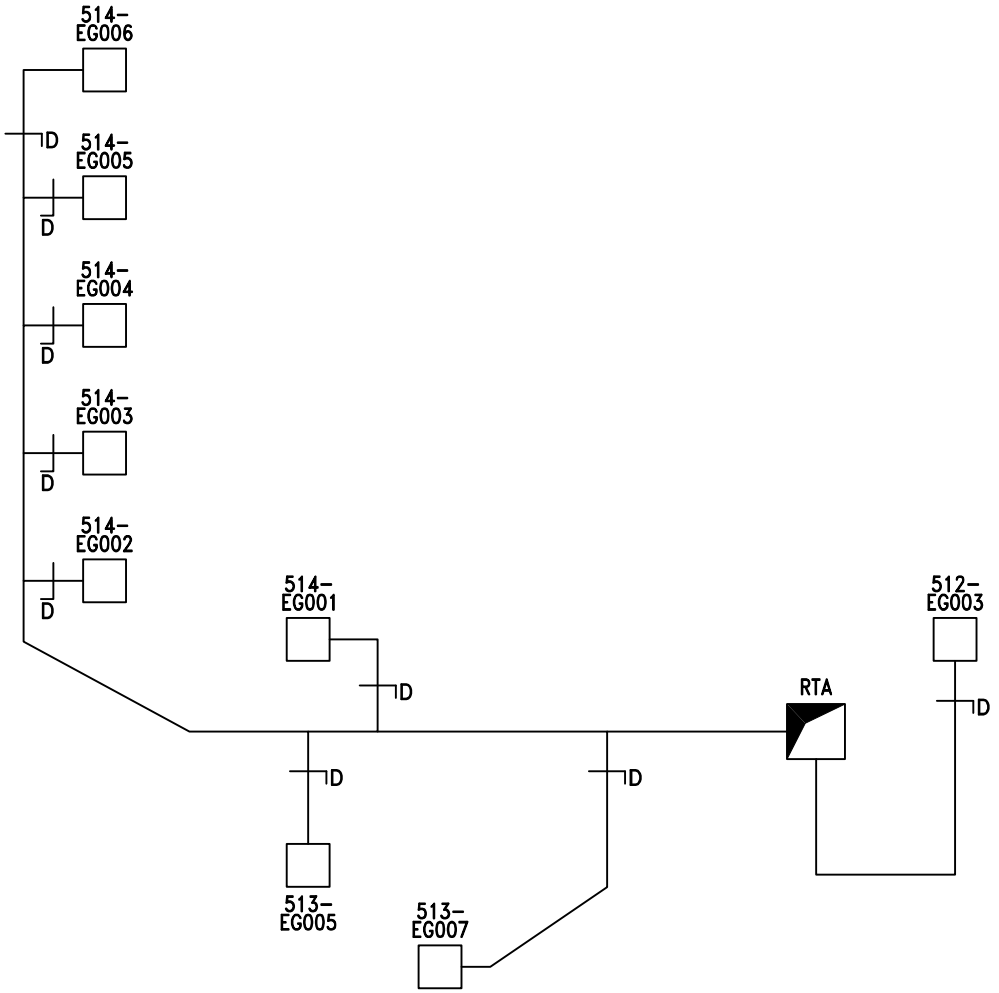

H&V Commissioning Services Limited
Kilknowe Office
16 Barrmill Road
Galston
East Ayrshire, KA4 8HH
Tel : 01563 821991
Fax: 01563 822220
email: talk2us@handv.co.uk

CONTRACT:
NSGH, ADULT & CHILDREN'S HOSPITAL - PLANTROOM 121

CLIENT:
MERCURY ENGINEERING UK

TITLE:
SCHEMATIC LAYOUT OF

121-AHU06 EXTRACT (SERVING 4TH TO 7TH FLOOR WARDS) LEVEL 4

DRAWN: KL/RP

DATE: 18/12/14

DRG No.: 5902/V29

SHEET: 13 OF 14

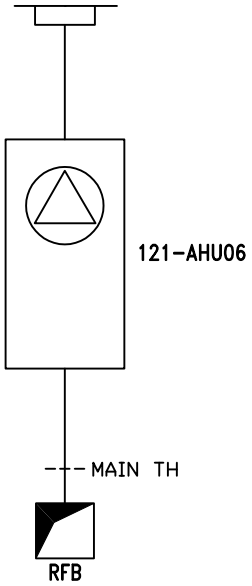

PLANTROOM 121 LEVEL 12

H&V Commissioning Services Limited
Kilknowe Office
16 Barrmill Road
Galston
East Ayrshire, KA4 8HH
Tel : 01563 821991
Fax: 01563 822220
email: talk2us@handv.co.uk

CONTRACT:
NSGH, ADULT & CHILDREN'S HOSPITAL - PLANTROOM 121

CLIENT:
MERCURY ENGINEERING UK

TITLE:
SCHEMATIC LAYOUT OF

121-AHU06 EXTRACT
(SERVING 4TH TO 7TH FLOOR WARDS)
PLANTROOM 121

DRAWN: KL/RP
DATE: 18/12/14
DRG No.: 5902/V30
SHEET: 14 OF 14

	Client Representative / Commissioning Manager	Client
Witnessed By:		
Representing:	Brookfield Multiplex	
Signature:	Awaiting Signature	
Date:		
Witnessed By:		
Representing:		
Signature:		
Date:		

Remarks:

Date: 14/12/14	Engineer: Stephen Murdoch	Sheet 1 of 13

	AIR SYSTEMS PRE COMMISSIONING SHEET	✓	X	N/A
1.	Check Fan for damage and that all the components are secure	✓		
2.	Check the transit straps have been removed, if applicable			✓
3.	Check pulleys are secure, tight, aligned and belts are correctly tensioned, if applicable			✓
4.	Check with the controls engineer that the system is available to run and that plant rotation is correct	✓		
5.	Check all ductwork/air terminals are fitted and that air regulating dampers are open	✓		
6.	Check louvres are fitted and clear from obstructions, if applicable	✓		
7.	Check fire dampers are open, if applicable	✓		
8.	Check the motor overloads are suitable and set			✓
9.	Check VAV or CAV boxes are installed correctly and ready for use.			✓
10.	Check the floor plenums are complete, if applicable			✓
11.	Complete commissioning test sheets.	✓		

COMMENTS:

FAN										
AHU Manufacturer		Not Applicable		Fan Size			355			
Fan Manufacturer		Dynair		Fan Serial No			1045124			
Fan Type		Centrifugal		Fan Model Nº.			AL355/4T3HG			
		Design		**Test**					**% Design**	
Air Volume (L/S)		1163		1272					109	
External Static Pressure (Pa)		405		Inlet	355	Outlet	265	Total	620	
Filter Test Data	Pre Filter (Pa)	Inlet	N/A	Outlet	N/A			∆P	N/A	
	Sec Filter (Pa)	Inlet	N/A	Outlet	N/A			∆P	N/A	
MOTOR										
Manufacturer		Motiv		Output kW			3.0			
Serial Nº		1306TG0188		Motor Full Load Current			6.39	Amps		
Voltage		400		Motor Running Current			4.12	Amps		
		Design		**Test**						
Rotational Speed R.P.M		1407		1323						
DRIVE DETAILS										
Variable Speed Drive		Yes		Set Point			47 Hz			

Comments: N/A – Not Applicable.

Instrument Used (Ref Nº.) HV12/1, HV12/4 & HV12/5

Date: 14/12/14	Engineer: Stephen Murdoch & Gregor Fulton	Sheet 3 of 13

VELOCITY PROFILE (taken facing air flow) **TEST HOLE LOCATION: LEVEL 8 RISER**

Test Hole Ref		Duct Dia (mm)		Duct Size (mm)		Duct Area		Design Air Volume		Design Air Velocity	
				Width x Height		M2		L/S		M/S	
Main TH				700	400	0.2800		1163		4.15	
4.80	4.30	4.30	4.60								
5.00	4.50	4.20	4.50								
4.70	5.00	4.20	4.40								
Velocity Sub Totals											
14.50	13.80	12.70	13.50								

Total Velocity	Number of Readings	Average Velocity	Measured Air Volume	% Design	Static Pressure
M/S		M/S	L/S		Pa
54.5	12	4.54	1272	109	82

Remarks:

Instrument Used: HV12/1

Date: 14/12/14	Engineer: Stephen Murdoch & Gregor Fulton	Sheet 4 of 13

VELOCITY PROFILE (taken facing air flow) **TEST HOLE LOCATION: CEILING VOID**

Test Hole Ref		Duct Dia (mm)		Duct Size (mm)		Duct Area		Design Air Volume		Design Air Velocity	
				Width x Height		M2		L/S		M/S	
TH1		200				0.0314		73		2.32	
2.40	2.40										
2.50	2.40										
2.30	2.50										
2.00	2.10										
Velocity Sub Totals											
9.20	9.40										

Total Velocity	Number of Readings	Average Velocity	Measured Air Volume	% Design	Static Pressure
M/S		M/S	L/S		Pa
18.6	8	2.33	73	100	19

Remarks: Test Hole serves 502-TG001 Test Volume 73 l/s ÷ Balometer Volume 64 l/s = 1.14 Factor

Instrument Used: HV12/1

Date: 14/12/14	Engineer: Stephen Murdoch & Gregor Fulton	Sheet 5 of 13

LEVEL 7

Design Data		Initial Test Data		Final Test & Regulation Data		
Terminal or Ref No	Design Air Volume l/s	Balometer Initial Air Volume l/s	Balometer Final Air Volume l/s	Balometer Factor	Balometer Final Air Volume l/s	% Design
502-TG004	73	70	68	1.14	77.52	106
502-TG003	73	59	67	1.14	76.38	105
502-TG005	170	300	159	1.14	181.26	107

Remarks

Instrument Used: HV12/15

Date: 14/12/14	Engineer: Stephen Murdoch & Gregor Fulton	Sheet 6 of 13

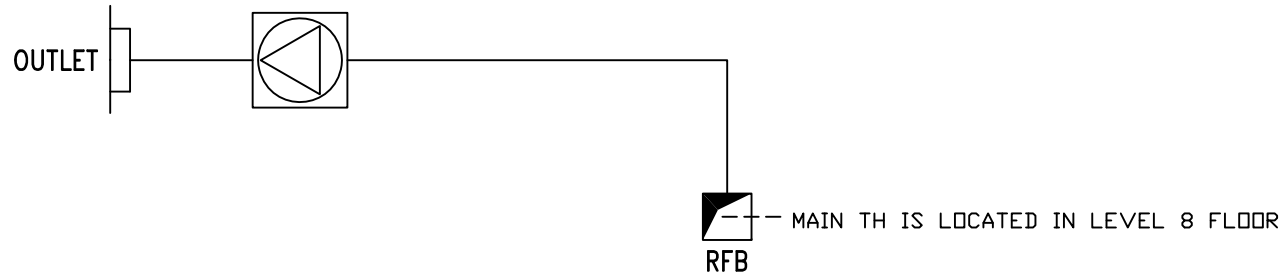

LEVEL 7

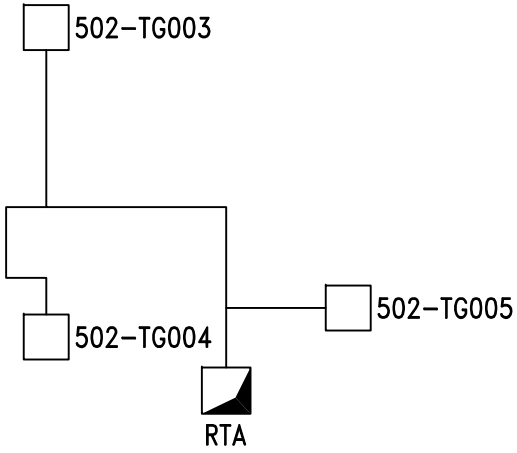

H&V Commissioning Services Limited
Kilknowe Office
16 Barrmill Road
Galston
East Ayrshire, KA4 8HH
Tel : 01563 821991
Fax: 01563 822220
email: talk2us@handv.co.uk

CONTRACT:	**NSGH, ADULT & CHILDREN'S HOSPITAL - PLANTROOM 124**
CLIENT:	**MERCURY ENGINEERING LTD.**
TITLE:	**SCHEMATIC LAYOUT OF 124-7 EF02 LEVEL 7**
DRAWN:	**LH/DG**
DATE:	**10/07/15**
DRG No.:	**5902/V72**
SHEET:	**7 OF 13**

© H&V Commissioning Services Ltd 2020

LEVEL 6

Design Data		Initial Test Data		Final Test & Regulation Data		
Terminal or Ref No	Design Air Volume l/s	Balometer Initial Air Volume l/s	Balometer Final Air Volume l/s	Balometer Factor	Balometer Final Air Volume l/s	% Design
502-TG001	73	58	65	1.14	74.10	102
502-TG002	73	37	65	1.14	74.10	102
502-TG003	170	225	150	1.14	171.00	101

Remarks

Instrument Used: HV12/15

Date: 14/12/14	Engineer: Stephen Murdoch & Gregor Fulton	Sheet 8 of 13

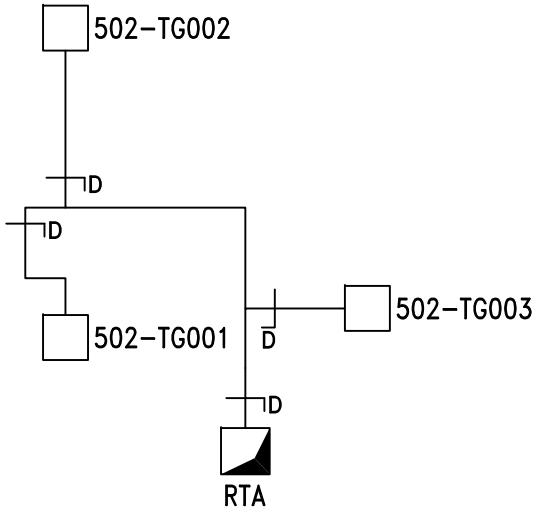

H&V Commissioning Services Limited
Kilknowe Office
16 Barrmill Road
Galston
East Ayrshire, KA4 8HH
Tel : 01563 821991
Fax: 01563 822220
email: talk2us@handv.co.uk

CONTRACT:
NSGH, ADULT & CHILDREN'S HOSPITAL - PLANTROOM 124

CLIENT:
MERCURY ENGINEERING LTD.

TITLE:
SCHEMATIC LAYOUT OF
124-7 EF02
LEVEL 6

DRAWN: LH/DG

DATE: 10/07/15

DRG No.: 5902/V73

SHEET: 9 OF 13

© H&V Commissioning Services Ltd 2020

LEVEL 5

Design Data		Initial Test Data		Final Test & Regulation Data		
Terminal or Ref No	Design Air Volume l/s	Balometer Initial Air Volume l/s	Balometer Final Air Volume l/s	Balometer Factor	Balometer Final Air Volume l/s	% Design
502-TG001	73	40	64	1.14	72.96	100
502-TG002	73	48	69	1.14	78.66	108
502-TG003	170	103	152	1.14	173.28	102

Remarks

Instrument Used: HV12/15

Date: 14/12/14	Engineer: Stephen Murdoch & Gregor Fulton	Sheet 10 of 13

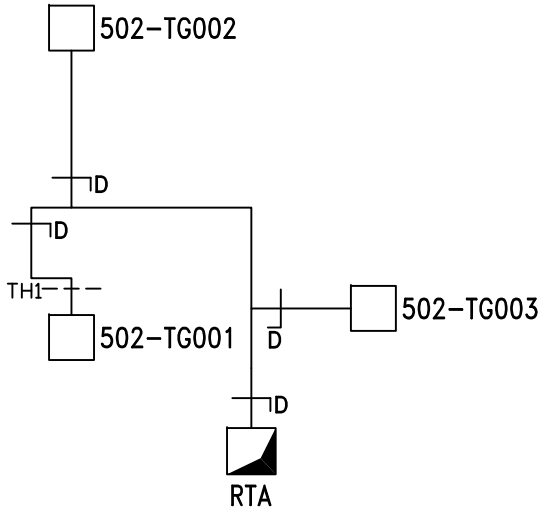

H&V Commissioning Services Limited
Kilknowe Office
16 Barrmill Road
Galston
East Ayrshire, KA4 8HH
Tel : 01563 821991
Fax: 01563 822220
email: talk2us@handv.co.uk

CONTRACT:
NSGH, ADULT & CHILDREN'S HOSPITAL - PLANTROOM 124

CLIENT:
MERCURY ENGINEERING LTD.

TITLE:
SCHEMATIC LAYOUT OF
124-7 EF02
LEVEL 5

DRAWN: LH/DG

DATE: 10/07/15

DRG No.: 5902/V74

SHEET: 11 OF 13

LEVEL 5

Design Data		Initial Test Data		Final Test & Regulation Data		
Terminal or Ref No	Design Air Volume l/s	Balometer Initial Air Volume l/s	Balometer Final Air Volume l/s	Balometer Factor	Balometer Final Air Volume l/s	% Design
502-TG001	45	50	41	1.14	46.74	104
502-TG002	170	179	150	1.14	171.00	101

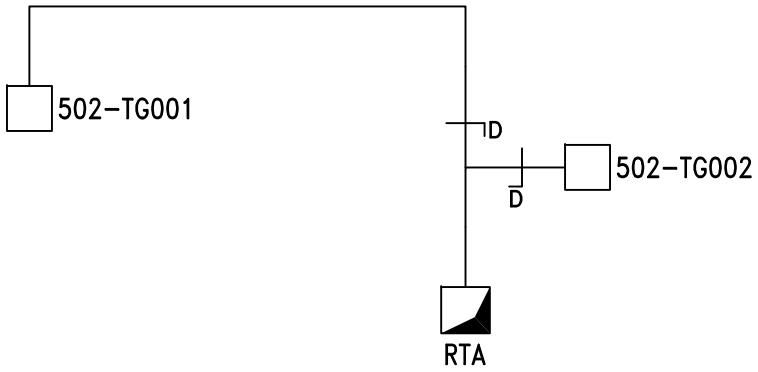

H&V Commissioning Services Limited
Kilknowe Office
16 Barrmill Road
Galston
East Ayrshire, KA4 8HH
Tel : 01563 821991
Fax: 01563 822220
email: talk2us@handv.co.uk

CONTRACT:
NSGH, ADULT & CHILDREN'S HOSPITAL - PLANTROOM 124

CLIENT:
MERCURY ENGINEERING LTD.

TITLE:
SCHEMATIC LAYOUT OF
124-7 EF02
LEVEL 4

DRAWN: LH/DG

DATE: 10/07/15

DRG No.: 5902/V75

SHEET: 13 OF 13

H & V
H & V
H & V

Commissioning Services Ltd
EST: 1975

Kilknowe Office,
16 Barrmill Road,
Galston,
Ayrshire, KA48HH.
TEL N°. 01563 821991
FAX N°. 01563 822220
E-Mail: talk2us@handv.co.uk

CONTRACT: NSGH, ADULT & CHILDRENS HOSPITAL – PLANTROOM 124

SYSTEM: 124 – AHU 04 SUPPLY (LEVELS 4, 5, 6 & 7)

WITNESSING OF TESTING AND BALANCING

	Client Representative / Commissioning Manager	Client
Witnessed By:	David Wilson	
Representing:	Brookfield Multiplex	
Signature:	[redacted]	
Date:	12/12/14	
Witnessed By:		
Representing:		
Signature:		
Date:		

Remarks:

H & V
H & V
H & V

Commissioning Services Ltd
EST: 1975

Kilknowe Office,
16 Barrmill Road,
Galston,
Ayrshire, KA48HH.
TEL N°. 01563 821991
FAX N°. 01563 822220
E-Mail: talk2us@handv.co.uk

CONTRACT: NSGH, ADULT & CHILDRENS HOSPITAL – PLANTROOM 124

SYSTEM: 124 – AHU 04 SUPPLY (LEVELS 4, 5, 6 & 7)

	AIR SYSTEMS PRE COMMISSIONING SHEET	✓	X	N/A
1.	Check AHU for damage and that all the components are secure	✓		
2.	Check the transit straps have been removed, if applicable	✓		
3.	Check pulleys are secure, tight, aligned and belts are correctly tensioned, if applicable	✓		
4.	Check with the controls engineer that the system is available to run and that plant rotation is correct	✓		
5.	Check all ductwork/air terminals are fitted and that air regulating dampers are open	✓		
6.	Check louvres are fitted and clear from obstructions, if applicable	✓		
7.	Check fire dampers are open, if applicable	✓		
8.	Check the motor overloads are suitable and set			✓
9.	Check VAV or CAV boxes are installed correctly and ready for use.			✓
10.	Check the floor plenums are complete, if applicable			✓
11.	Complete commissioning test sheets.	✓		

COMMENTS

H & V
H & V
H & V

Commissioning Services Ltd
EST: 1975

Kilknowe Office,
16 Barrmill Road,
Galston,
Ayshire, KA48HH.
TEL N°. 01563 821991
FAX N°. 01563 822220
E-Mail: talk2us@handv.co.uk

CONTRACT: NSGH, ADULT & CHILDRENS HOSPITAL – PLANTROOM 124

AHU TEST SHEET — SYSTEM: 124 – AHU 04 SUPPLY (LEVELS 4, 5, 6 & 7)

AHU										
AHU Manufacturer		Barkell		Fan Size		400				
Fan Manufacturer		Comefri		AHU Serial No		OP1B3050962				
Fan Type		Centrifugal		AHU Model N°.		TZAF 400 RFF				
		Design		**Test**				**% Design**		
Air Volume (L/S)		2560		2788				109		
External Static Pressure (Pa)		480		Inlet	80	Outlet	310	Total	390	
Fan Rotational Speed (R.P.M)		2700		2592						
Filter Test Data	Pre Filter (Pa)	Inlet	*	Outlet	*			ΔP	45	
	Sec Filter (Pa)	Inlet	*	Outlet	*			ΔP	50	
MOTOR										
Manufacturer		TEC		Output kW		5.5				
Serial N°		1305-0265837		Motor Full Load Current		10.9	Amps			
Voltage		400		Motor Running Current		7.43	Amps			
		Design		**Test**						
Rotational Speed.		1450		1392						
DRIVE DETAILS										
Motor Pulley/Shaft Size (mm∅)		SPZ 140	28	Motor Pulley Taper Lock Size		2012				
Fan Pulley/Shaft Size (mm∅)		SPZ 118	40	Fan Pulley Taper Lock Size		2012				
Belt Type/Size		XPZ	1012	N°. Of Belts		4				
Shaft Centres mm		285		Adjustment		-	35	+	25	mm
Variable Speed Drive		Yes		Set Point		48Hz				

STANDBY PLANT						
Test Air Volume	2788	Inlet Pressure	80	Motor Rotational Speed	1392	Motor Running Current
% Design	109	Outlet Pressure	310	Fan Rotational Speed	2592	7.43 Amps
Variable Speed Drive			Yes	Set Point	48Hz	

Comments. 2nd Motor Serial Number – 1305-0265861

*Filter pressure taken from magnehelic gauge.

Control static pressure sensor = 305Pa.

Instrument Used (Ref N°.) HV12/1, HV12/4 & HV12/5

Date: 30/09/14	Engineer: Stephen Murdoch & Grant Foster	Sheet 3 of 15

H & V
H & V
H & V

Commissioning Services Ltd
EST: 1975

Kilknowe Office,
16 Barrmill Road,
Galston,
Ayshire, KA48HH.
TEL N°. 01563 821991
FAX N°. 01563 822220
E-Mail: talk2us@handv.co.uk

CONTRACT: NSGH, ADULT & CHILDRENS HOSPITAL – PLANTROOM 124

DUCT VOLUME TEST SHEET

SYSTEM: 124 – AHU 04 SUPPLY (LEVELS 4, 5, 6 & 7)

VELOCITY PROFILE (taken facing air flow) **TEST HOLE LOCATION: PLANTROOM 124**

Test Hole Ref		Duct Dia (mm)		Duct Size (mm)		Duct Area		Design Air Volume		Design Air Velocity	
				Width x Height		M2		L/S		M/S	
Main				1000	600	0.6000		2560		4.27	
5.40	5.00	4.50	4.40	4.40	3.90						
6.20	4.90	4.40	3.90	3.90	3.60						
6.20	5.30	4.50	3.80	3.70	3.30						
6.10	5.70	5.50	5.00	4.70	3.20						
Velocity Sub Totals											
23.90	20.90	18.90	17.10	16.70	14.00						

Total Velocity	Number of Readings	Average Velocity	Measured Air Volume	% Design	Static Pressure
M/S		M/S	L/S		Pa
111.5	24	4.65	2788	109	190

Remarks:

Instrument Used: HV12/1

Date: 30/09/14 | Engineer: Stephen Murdoch & Gregor Fulton | Sheet 4 of 15

H & V
H & V
H & V

Commissioning Services Ltd
EST: 1975

Kilknowe Office,
16 Barrmill Road,
Galston,
Ayshire, KA48HH.
TEL N°. 01563 821991
FAX N°. 01563 822220
E-Mail: talk2us@handv.co.uk

CONTRACT: NSGH, ADULT & CHILDRENS HOSPITAL – PLANTROOM 124

DUCT VOLUME TEST SHEET

SYSTEM: 124 – AHU 04 SUPPLY (LEVELS 4, 5, 6 & 7)

VELOCITY PROFILE (taken facing air flow) **TEST HOLE LOCATION: CEILING VOID**

Test Hole Ref		Duct Dia (mm)		Duct Size (mm)		Duct Area		Design Air Volume		Design Air Velocity	
				Width x Height		M2		L/S		M/S	
TH1		160				0.0201		40		1.99	
2.00	2.10										
1.90	2.30										
2.20	2.30										
2.30	2.20										
Velocity Sub Totals											
8.40	8.90										

Total Velocity	Number of Readings	Average Velocity	Measured Air Volume	% Design	Static Pressure
M/S		M/S	L/S		Pa
17.3	8	2.16	43	109	101

Remarks: Test Hole serves CB/W1/L3/1, Level 7.

Instrument Used: HV12/1

Date: 30/09/14 | Engineer: Stephen Murdoch & Gregor Fulton | Sheet 5 of 15

H & V
H & V
H & V

Commissioning Services Ltd
EST: 1975

Kilknowe Office,
16 Barrmill Road,
Galston,
Ayshire, KA48HH.
TEL N°. 01563 821991
FAX N°. 01563 822220
E-Mail: talk2us@handv.co.uk

CONTRACT: NSGH, ADULT & CHILDRENS HOSPITAL – PLANTROOM 124

DUCT VOLUME TEST SHEET

SYSTEM: 124 – AHU 04 SUPPLY (LEVELS 4, 5, 6 & 7)

VELOCITY PROFILE (taken facing air flow) **TEST HOLE LOCATION: CEILING VOID**

Test Hole Ref		Duct Dia (mm)		Duct Size (mm)		Duct Area		Design Air Volume		Design Air Velocity	
				Width x Height		M2		L/S		M/S	
TH2		160				0.0201		40		1.99	
1.90	2.00										
2.20	2.10										
2.40	2.50										
2.00	2.10										
Velocity Sub Totals											
8.50	8.70										

Total Velocity	Number of Readings	Average Velocity	Measured Air Volume	% Design	Static Pressure
M/S		M/S	L/S		Pa
17.2	8	2.15	43	108	72

Remarks: Test Hole serves CB/W1/L1/14, Level 7.

Instrument Used: HV12/1

Date: 30/09/14 | Engineer: Stephen Murdoch & Gregor Fulton | Sheet 6 of 15

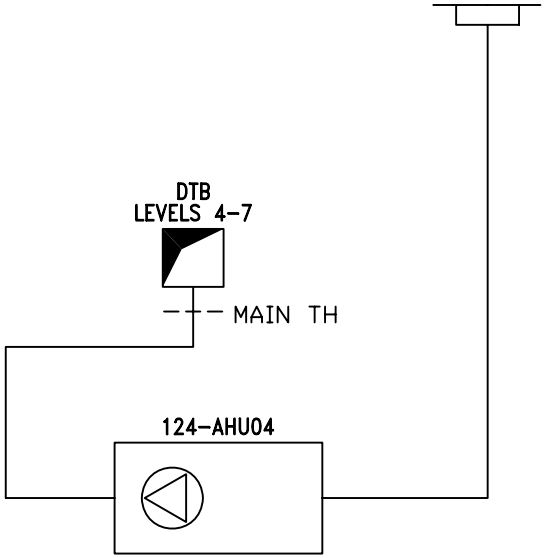

H&V Commissioning Services Limited
Kilknowe Office
16 Barrmill Road
Galston
East Ayrshire, KA4 8HH
Tel : 01563 821991
Fax: 01563 822220
email: talk2us@handv.co.uk

CONTRACT:
NSGH, ADULT & CHILDREN'S HOSPITAL - PLANTROOM 124

CLIENT:
MERCURY ENGINEERING LTD.

TITLE:
SCHEMATIC LAYOUT OF 124-AHU04 SUPPLY PLANTROOM 124 - LEVEL 12

DRAWN: KL/SM

DATE: 27/11/14

DRG No.: 5902/V11

SHEET: 7 OF 15

H & V
H & V
H & V

Commissioning Services Ltd

EST: 1975

Kilknowe Office,
16 Barrmill Road,
Galston,
Ayrshire, KA48HH.
TEL N°. 01563 821991
FAX N°. 01563 822220
E-Mail: talk2us@handv.co.uk

CONTRACT: NSGH, ADULT & CHILDRENS HOSPITAL – PLANTROOM 124

CHILLED BEAM BALANCE SHEET

SYSTEM: 124 – AHU 04 SUPPLY (LEVELS 4, 5, 6 & 7)

Chilled Beam Data			Design Data		Test Data			
No.	Size (mm)	Setting	Volume (l/s)	Pressure (Pa)	Initial Pressure (Pa)	Final Pressure (Pa)	Final Volume (l/s)	% Design
LEVEL 7								
CB/W1/L3/1	N/A	N/A	40	63	62	63	40	100
CB/W1/L3/2	N/A	N/A	40	63	74	63	40	100
CB/W1/L1/1	N/A	N/A	40	51.8	83	52	40.1	100
CB/W1/L1/2	N/A	N/A	40	51.8	80	52	40.1	100
CB/W1/L1/3	N/A	N/A	40	51.8	80	52	40.1	100
CB/W1/L1/4	N/A	N/A	40	51.8	87	52	40.1	100
CB/W1/L1/14	N/A	N/A	40	51.8	50	53	40.5	101
CB/W1/L1/13	N/A	N/A	40	51.8	49	52	40.1	100
CB/W1/L1/12	N/A	N/A	40	51.8	54	52	40.1	100
CB/W1/L1/11	N/A	N/A	40	51.8	55	52	40.1	100
CB/W1/L1/10	N/A	N/A	40	51.8	65	52	40.1	100
CB/W1/L1/9	N/A	N/A	40	51.8	65	52	40.1	100
CB/W1/L1/8	N/A	N/A	40	51.8	71	52	40.1	100
CB/W1/L1/7	N/A	N/A	40	51.8	69	52	40.1	100
CB/W1/L1/6	N/A	N/A	40	51.8	73	52	40.1	100
CB/W1/L1/5	N/A	N/A	40	51.8	85	53	40.5	101

REMARKS:

INSTRUMENT USED: HV12/1

Date:	30/09/14	Engineer:	Stephen Murdoch & Gregor Fulton	Sheet 8 of 15

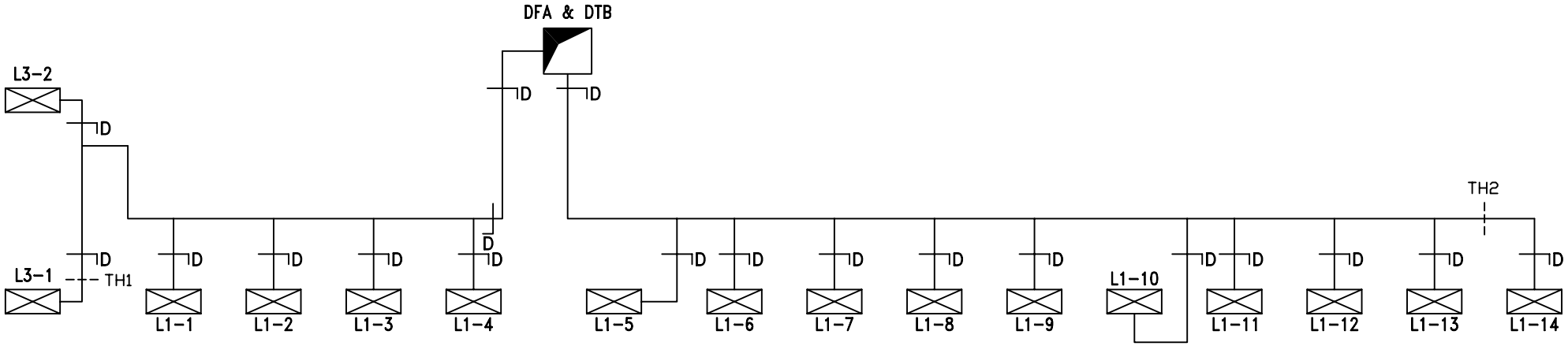

L3-5 ALL CHILLED BEAMS PREFIXED CB/W1/

H&V Commissioning Services Limited
Kilknowe Office
16 Barrmill Road
Galston
East Ayrshire, KA4 8HH
Tel : 01563 821991
Fax: 01563 822220
email: talk2us@handv.co.uk

CONTRACT:
NSGH, ADULT & CHILDREN'S HOSPITAL - PLANTROOM 124

CLIENT:
MERCURY ENGINEERING LTD.

TITLE:
SCHEMATIC LAYOUT OF 124-AHU04 SUPPLY LEVEL 7 - ZONE H

DRAWN: KL/SM

DATE: 27/11/14

DRG No.: 5902/V15

SHEET: 9 OF 15

H & V
H & V
H & V

Commissioning Services Ltd

EST: 1975

Kilknowe Office,
16 Barrmill Road,
Galston,
Ayrshire, KA48HH.
TEL N°. 01563 821991
FAX N°. 01563 822220
E-Mail: talk2us@handv.co.uk

CONTRACT: NSGH, ADULT & CHILDRENS HOSPITAL – PLANTROOM 124

CHILLED BEAM BALANCE SHEET

SYSTEM: 124 – AHU 04 SUPPLY (LEVELS 4, 5, 6 & 7)

Chilled Beam Data			Design Data		Test Data			
No.	Size (mm)	Setting	Volume (l/s)	Pressure (Pa)	Initial Pressure (Pa)	Final Pressure (Pa)	Final Volume (l/s)	% Design
LEVEL 6								
CB/W1/L3/1	N/A	N/A	40	63	80	63	40	100
CB/W1/L3/2	N/A	N/A	40	63	51	64	40.3	101
CB/W1/L1/1	N/A	N/A	40	51.8	83	52	40.1	100
CB/W1/L1/2	N/A	N/A	40	51.8	84	52	40.1	100
CB/W1/L1/3	N/A	N/A	40	51.8	84	53	40.5	101
CB/W1/L1/4	N/A	N/A	40	51.8	84	53	40.5	101
CB/W1/L1/14	N/A	N/A	40	51.8	56	54	40.8	102
CB/W1/L1/13	N/A	N/A	40	51.8	55	53	40.5	101
CB/W1/L1/12	N/A	N/A	40	51.8	57	53	40.5	101
CB/W1/L1/11	N/A	N/A	40	51.8	61	53	40.5	101
CB/W1/L1/10	N/A	N/A	40	51.8	69	56	41.6	104
CB/W1/L1/9	N/A	N/A	40	51.8	68	54	40.8	102
CB/W1/L1/8	N/A	N/A	40	51.8	79	53	40.5	101
CB/W1/L1/7	N/A	N/A	40	51.8	75	55	41.2	103
CB/W1/L1/6	N/A	N/A	40	51.8	82	53	40.5	101
CB/W1/L1/5	N/A	N/A	40	51.8	93	54	40.8	102

REMARKS:

INSTRUMENT USED: HV12/1

Date:	30/09/14	Engineer:	Stephen Murdoch & Gregor Fulton	Sheet 10 of 15

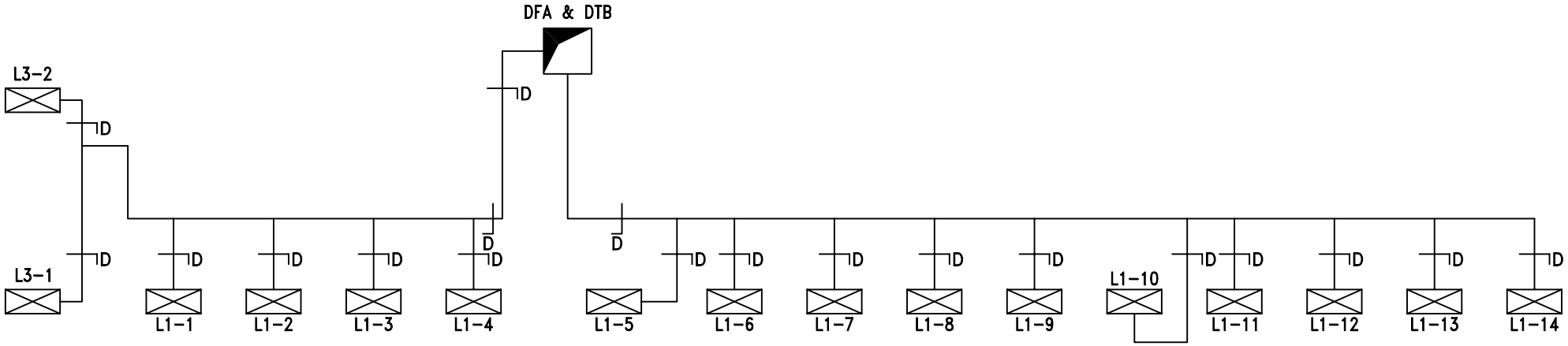

L3-5
ALL CHILLED BEAMS PREFIXED CB/W1/

H&V Commissioning Services Limited
Kilknowe Office
16 Barrmill Road
Galston
East Ayrshire, KA4 8HH
Tel : 01563 821991
Fax: 01563 822220
email: talk2us@handv.co.uk

CONTRACT:
NSGH, ADULT & CHILDREN'S HOSPITAL - PLANTROOM 124

CLIENT:
MERCURY ENGINEERING LTD.

TITLE:
SCHEMATIC LAYOUT OF 124-AHU04 SUPPLY LEVEL 6 - ZONE H

DRAWN: KL/SM

DATE: 27/11/14

DRG No.: 5902/V14

SHEET: 11 OF 15

H & V
H & V
H & V

Commissioning Services Ltd
EST: 1975

Kilknowe Office,
16 Barrmill Road,
Galston,
Ayrshire, KA48HH.
TEL N°. 01563 821991
FAX N°. 01563 822220
E-Mail: talk2us@handv.co.uk

CONTRACT: NSGH, ADULT & CHILDRENS HOSPITAL – PLANTROOM 124

CHILLED BEAM BALANCE SHEET

SYSTEM: 124 – AHU 04 SUPPLY (LEVELS 4, 5, 6 & 7)

Chilled Beam Data			Design Data		Test Data			
No.	Size (mm)	Setting	Volume (l/s)	Pressure (Pa)	Initial Pressure (Pa)	Final Pressure (Pa)	Final Volume (l/s)	% Design
LEVEL 5								
CB/W1/L3/1	N/A	N/A	40	63	88	63	40	100
CB/W1/L3/2	N/A	N/A	40	63	91	63	40	100
CB/W1/L1/1	N/A	N/A	40	51.8	90	52	40.1	100
CB/W1/L1/2	N/A	N/A	40	51.8	99	53	40.5	101
CB/W1/L1/3	N/A	N/A	40	51.8	99	53	40.5	101
CB/W1/L1/4	N/A	N/A	40	51.8	100	53	40.5	101
CB/W1/L1/14	N/A	N/A	40	51.8	47	52	40.1	100
CB/W1/L1/13	N/A	N/A	40	51.8	50	52	40.1	100
CB/W1/L1/12	N/A	N/A	40	51.8	49	52	40.1	100
CB/W1/L1/11	N/A	N/A	40	51.8	51	52	40.1	100
CB/W1/L1/10	N/A	N/A	40	51.8	50	52	40.1	100
CB/W1/L1/9	N/A	N/A	40	51.8	61	52	40.1	100
CB/W1/L1/8	N/A	N/A	40	51.8	59	53	40.5	101
CB/W1/L1/7	N/A	N/A	40	51.8	63	55	41.2	103
CB/W1/L1/6	N/A	N/A	40	51.8	65	53	40.5	101
CB/W1/L1/5	N/A	N/A	40	51.8	68	54	40.8	102

REMARKS:

INSTRUMENT USED: HV12/1

Date:	30/09/14	Engineer:	Stephen Murdoch & Gregor Fulton	Sheet 12 of 15

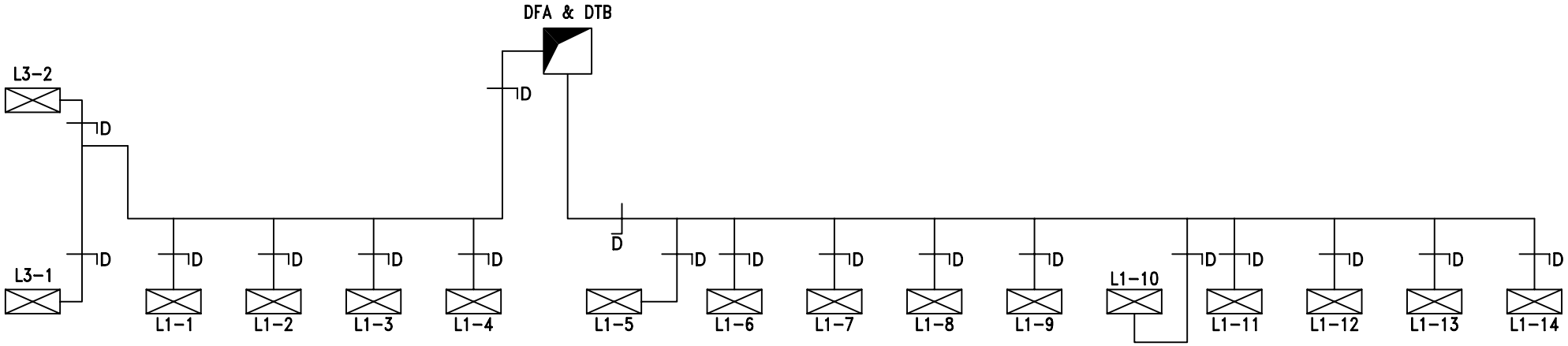

L3-5 ALL CHILLED BEAMS PREFIXED CB/W1/

H&V Commissioning Services Limited
Kilknowe Office
16 Barrmill Road
Galston
East Ayrshire, KA4 8HH
Tel : 01563 821991
Fax: 01563 822220
email: talk2us@handv.co.uk

CONTRACT:
NSGH, ADULT & CHILDREN'S HOSPITAL - PLANTROOM 124

CLIENT:
MERCURY ENGINEERING LTD.

TITLE:
SCHEMATIC LAYOUT OF 124-AHU04 SUPPLY LEVEL 5 - ZONE H

DRAWN: KL/SM

DATE: 27/11/14

DRG No.: 5902/V13

SHEET: 13 OF 15

H & V
H & V
H & V

Commissioning Services Ltd

EST: 1975

Kilknowe Office,
16 Barrmill Road,
Galston,
Ayrshire, KA48HH.
TEL N°. 01563 821991
FAX N°. 01563 822220
E-Mail: talk2us@handv.co.uk

CONTRACT: NSGH, ADULT & CHILDRENS HOSPITAL – PLANTROOM 124

CHILLED BEAM BALANCE SHEET

SYSTEM: 124 – AHU 04 SUPPLY (LEVELS 4, 5, 6 & 7)

Chilled Beam Data			Design Data		Test Data			
No.	Size (mm)	Setting	Volume (l/s)	Pressure (Pa)	Initial Pressure (Pa)	Final Pressure (Pa)	Final Volume (l/s)	% Design
LEVEL 4								
CB/W1/L2/1	N/A	N/A	40	63.0	71	63	40	100
CB/W1/L2/2	N/A	N/A	40	63.0	89	63	40	100
CB/W1/L2/3	N/A	N/A	40	63.0	86	64	40.3	101
CB/W1/L2/4	N/A	N/A	40	63.0	85	63	40	100
CB/W1/L2/5	N/A	N/A	40	63.0	85	65	40.6	102
CB/W1/L2/6	N/A	N/A	40	63.0	47	63	40	100
CB/W1/L2/7	N/A	N/A	40	63.0	45	63	40	100
CB/W1/L2/8	N/A	N/A	40	63.0	47	63	40	100
CB/W1/L2/9	N/A	N/A	40	63.0	48	63	40	100
CB/W1/L1/1	N/A	N/A	40	51.8	42	53	40.5	101
CB/W1/L2/10	N/A	N/A	40	63.0	54	63	40	100
CB/W1/L2/11	N/A	N/A	40	63.0	55	64	40.3	101
CB/W1/L2/12	N/A	N/A	40	63.0	60	63	40	100
CB/W1/L2/13	N/A	N/A	40	63.0	63	65	40.6	102
CB/W1/L2/14	N/A	N/A	40	63.0	67	65	40.6	102
CB/W1/L2/15	N/A	N/A	40	63.0	80	64	40.3	101
CB/W1/L2/2	N/A	N/A	40	63.0	89	63	40	100

REMARKS:

INSTRUMENT USED: HV12/1

Date:	30/09/14	Engineer:	Stephen Murdoch & Gregor Fulton	Sheet 14 of 15

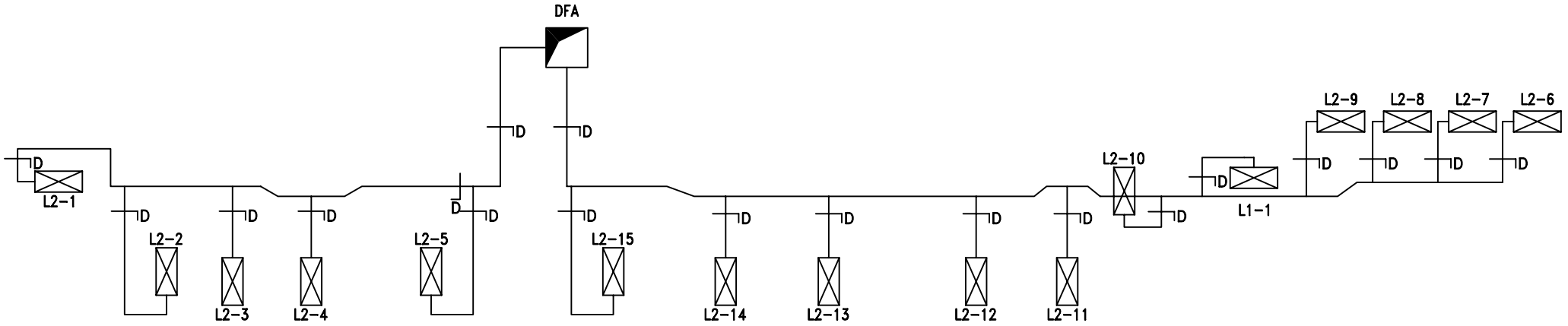

LEVEL 4

L2-1
ALL CHILLED BEAMS PREFIXED CB/W1/

H&V Commissioning Services Limited **Kilknowe Office** **16 Barrmill Road** **Galston** **East Ayrshire, KA4 8HH** **Tel : 01563 821991** **Fax: 01563 822220** **email: talk2us@handv.co.uk**	**CONTRACT:** **NSGH, ADULT & CHILDREN'S HOSPITAL - PLANTROOM 124** **CLIENT:** **MERCURY ENGINEERING LTD.**	**TITLE:** **SCHEMATIC LAYOUT OF 124-AHU04 SUPPLY LEVEL 4**	**DRAWN:** LH/SM **DATE:** 27/11/14 **DRG No.:** 5902/V12 **SHEET:** 15 OF 15

4/25/2020

H & V
H & V
H & V

Commissioning Services Ltd
EST: 1975

Kilknowe Office,
16 Barrmill Road,
Galston,
Ayrshire, KA48HH.
TEL N°. 01563 821991
FAX N°. 01563 822220
E-Mail: talk2us@handv.co.uk

CONTRACT: NSGH, ADULT & CHILDRENS HOSPITAL – PLANTROOM 124

SYSTEM: 124 – AHU 04 DIRTY EXTRACT (LEVELS 4, 5, 6 & 7)

WITNESSING OF TESTING AND BALANCING

	Client Representative / Commissioning Manager	Client
Witnessed By:	David Wilson	
Representing:	Brookfield Multiplex	
Signature:	[redacted]	
Date:	12/12/14	
Witnessed By:		
Representing:		
Signature:		
Date:		

Remarks:

H & V
H & V
H & V

Commissioning Services Ltd
EST: 1975

Kilknowe Office,
16 Barrmill Road,
Galston,
Ayrshire, KA48HH.
TEL N°. 01563 821991
FAX N°. 01563 822220
E-Mail: talk2us@handv.co.uk

CONTRACT: NSGH, ADULT & CHILDRENS HOSPITAL – PLANTROOM 124

SYSTEM: 124 – AHU 04 DIRTY EXTRACT (LEVELS 4, 5, 6 & 7)

	AIR SYSTEMS PRE COMMISSIONING SHEET	✓	X	N/A
1.	Check AHU for damage and that all the components are secure	✓		
2.	Check the transit straps have been removed, if applicable	✓		
3.	Check pulleys are secure, tight, aligned and belts are correctly tensioned, if applicable	✓		
4.	Check with the controls engineer that the system is available to run and that plant rotation is correct	✓		
5.	Check all ductwork/air terminals are fitted and that air regulating dampers are open	✓		
6.	Check louvres are fitted and clear from obstructions, if applicable	✓		
7.	Check fire dampers are open, if applicable	✓		
8.	Check the motor overloads are suitable and set			✓
9.	Check VAV or CAV boxes are installed correctly and ready for use.			✓
10.	Check the floor plenums are complete, if applicable			✓
11.	Complete commissioning test sheets.	✓		

COMMENTS

H & V
H & V
H & V

Commissioning Services Ltd
EST: 1975

Kilknowe Office,
16 Barrmill Road,
Galston,
Ayshire, KA48HH.
TEL N°. 01563 821991
FAX N°. 01563 822220
E-Mail: talk2us@handv.co.uk

CONTRACT: NSGH, ADULT & CHILDRENS HOSPITAL – PLANTROOM 124

AHU TEST SHEET

SYSTEM: 124 – AHU 04 DIRTY EXTRACT (LEVELS 4, 5, 6 & 7)

AHU											
AHU Manufacturer			Barkell		Fan Size			450			
Fan Manufacturer			Comefri		AHU Serial No			OP1 B3050963			
Fan Type			Centrifugal		AHU Model N°.			TZAF 450 RFF			
			Design		**Test**					**% Design**	
Air Volume		(L/S)	2608		2750					105	
External Static Pressure		(Pa)	420		Inlet	224	Outlet	42	Total	266	
Fan Rotational Speed		(R.P.M)	2400		2256						
Filter Test Data	Pre Filter	(Pa)	Inlet	*	Outlet	*			ΔP	30	
	Sec Filter	(Pa)	Inlet	N/A	Outlet	N/A			ΔP	N/A	
MOTOR											
Manufacturer			TEC		Output kW			4.0			
Serial N°			1305-0562805		Motor Full Load Current			8.14	Amps		
Voltage			400		Motor Running Current			5.18	Amps		
			Design		**Test**						
Rotational Speed.			1430		1344						
DRIVE DETAILS											
Motor Pulley/Shaft Size		(mm∅)	SPZ 180	28	Motor Pulley Taper Lock Size			2012			
Fan Pulley/Shaft Size		(mm∅)	SPZ 170	50	Fan Pulley Taper Lock Size			2517			
Belt Type/Size			XPZ	1162	N°. Of Belts			4			
Shaft Centres mm			300		Adjustment			-	20	+	40 mm
Variable Speed Drive			Yes		Set Point			47Hz			
STANDBY PLANT											
Test Air Volume	2750	Inlet Pressure	224		Motor Rotational Speed	1344	Motor Running Current				
% Design	105	Outlet Pressure	42		Fan Rotational Speed	2256	5.18 Amps				
Variable Speed Drive			Yes		Set Point	47Hz					

Comments. 2nd Motor Serial Number – 1305-0562818.

*Filter pressure taken from magnehelic gauge.

N/A – Not Applicable.

Instrument Used (Ref N°.) HV12/1, HV12/4 & HV12/5

Date: 02/10/14	Engineer: Stephen Murdoch & Grant Foster	Sheet 3 of 14

H & V
H & V
H & V

Commissioning Services Ltd
EST: 1975

Kilknowe Office,
16 Barrmill Road,
Galston,
Ayshire, KA48HH.
TEL N°. 01563 821991
FAX N°. 01563 822220
E-Mail: talk2us@handv.co.uk

CONTRACT: NSGH, ADULT & CHILDRENS HOSPITAL – PLANTROOM 124

DUCT VOLUME TEST SHEET

SYSTEM: 124 – AHU 04 DIRTY EXTRACT (LEVELS 4, 5, 6 & 7)

VELOCITY PROFILE (taken facing air flow) **TEST HOLE LOCATION: LEVEL 8, RISER T6**

Test Hole Ref		Duct Dia (mm)		Duct Size (mm)		Duct Area		Design Air Volume		Design Air Velocity	
				Width x Height		M2		L/S		M/S	
Main				1000	600	0.6000		2608		4.35	
4.70	4.90	4.50	4.80	4.90	4.30						
4.50	4.20	3.90	4.50	4.90	4.80						
4.20	4.20	4.50	4.90	4.80	4.70						
4.00	4.10	4.80	5.10	5.00	4.80						
Velocity Sub Totals											
17.40	17.40	17.70	19.30	19.60	18.60						

Total Velocity	Number of Readings	Average Velocity	Measured Air Volume	% Design	Static Pressure
M/S		M/S	L/S		Pa
110	24	4.58	2750	105	165

Remarks:

Instrument Used: HV12/1

Date: 02/10/14 | Engineer: Stephen Murdoch & Gregor Fulton | Sheet 4 of 14

H & V
H & V
H & V

Commissioning Services Ltd
EST: 1975

Kilknowe Office,
16 Barrmill Road,
Galston,
Ayshire, KA48HH.
TEL N°. 01563 821991
FAX N°. 01563 822220
E-Mail: talk2us@handv.co.uk

CONTRACT: NSGH, ADULT & CHILDRENS HOSPITAL – PLANTROOM 124

DUCT VOLUME TEST SHEET

SYSTEM: 124 – AHU 04 DIRTY EXTRACT (LEVELS 4, 5, 6 & 7)

VELOCITY PROFILE (taken facing air flow) **TEST HOLE LOCATION: ABOVE CEILING**

Test Hole Ref		Duct Dia (mm)		Duct Size (mm)		Duct Area		Design Air Volume		Design Air Velocity	
				Width x Height		M2		L/S		M/S	
TH1		160				0.0201		45		2.24	
2.40	2.30										
2.20	2.20										
2.20	2.10										
2.30	2.20										
Velocity Sub Totals											
9.10	8.80										

Total Velocity	Number of Readings	Average Velocity	Measured Air Volume	% Design	Static Pressure
M/S		M/S	L/S		Pa
17.9	8	2.24	45	100	34

Remarks: Test Hole serves 509-TG007, Level 7.
Test Volume = 45 l/s ÷ Balometer Volume = 41 l/s = 1.10 Factor

Instrument Used: HV12/1

Date: 02/10/14 | Engineer: Stephen Murdoch & Gregor Fulton | Sheet 5 of 14

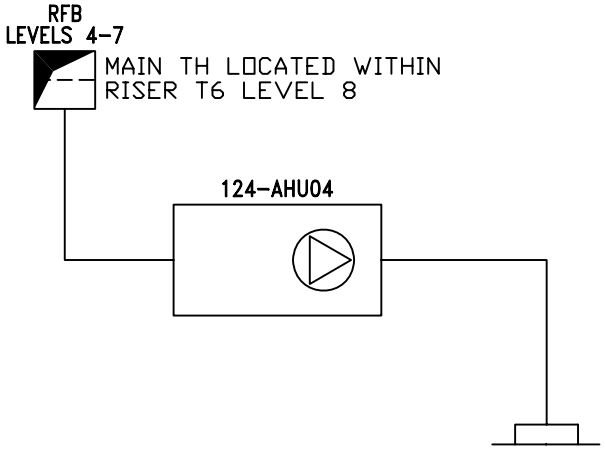

H&V Commissioning Services Limited
Kilknowe Office
16 Barrmill Road
Galston
East Ayrshire, KA4 8HH
Tel : 01563 821991
Fax: 01563 822220
email: talk2us@handv.co.uk

CONTRACT:
NSGH, ADULT & CHILDREN'S HOSPITAL - PLANTROOM 124

CLIENT:
MERCURY ENGINEERING LTD.

TITLE:
SCHEMATIC LAYOUT OF 124-AHU04 EXTRACT PLANTROOM 124 - LEVEL 12

DRAWN: KL/SM
DATE: 27/11/14
DRG No.: 5902/V16
SHEET: 6 OF 14

H & V
H & V
H & V

Commissioning Services Ltd

EST: 1975

Kilknowe Office,
16 Barrmill Road,
Galston,
Ayrshire, KA48HH.
TEL N°. 01563 821991
FAX N°. 01563 822220
E-Mail: talk2us@handv.co.uk

CONTRACT: NSGH, ADULT & CHILDRENS HOSPITAL – PLANTROOM 124

GRILLE TEST SHEET

SYSTEM: 124 – AHU 04 DIRTY EXTRACT (LEVELS 4, 5, 6 & 7)

Design Data		Initial Test Data		Final Test & Regulation Data		
Terminal or Ref No	Design Air Volume l/s	Balometer Initial Air Volume l/s	Balometer Final Air Volume l/s	Balometer Factor	Balometer Final Air Volume l/s	% Design
LEVEL 7						
*TG007	45	21	41	1.10	45.10	100
*TG006	45	29	44	1.10	48.40	108
*TG004	45	22	41	1.10	45.10	100
*TG005	45	31	42	1.10	46.20	103
*TG003	45	39	42	1.10	46.20	103
*TG002	45	37	42	1.10	46.20	103
*TG001	45	48	41	1.10	45.10	100
**TG011	45	45	41	1.10	45.10	100
**TG013	45	54	42	1.10	46.20	103
**TG012	45	55	43	1.10	47.30	105
**TG015	45	55	43	1.10	47.30	105
**TG016	45	59	44	1.10	48.40	108
**TG017	45	71	41	1.10	45.10	100
**TG018	45	61	42	1.10	46.20	103
**TG014	22	43	21	1.10	23.10	105

Remarks: *All Grilles prefixed with 509- **All Grilles prefixed with 510-

Instrument Used: HV12/15

Date: 02/10/14	Engineer: Stephen Murdoch & Gregor Fulton	Sheet 7 of 14

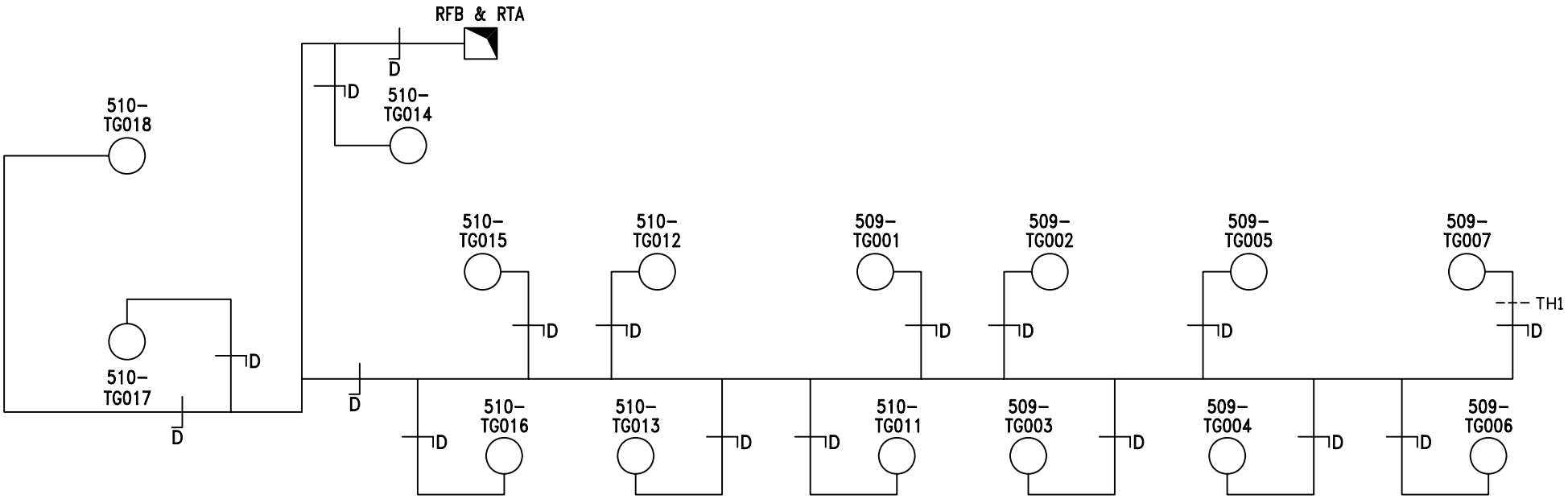

H&V Commissioning Services Limited **Kilknowe Office** **16 Barrmill Road** **Galston** **East Ayrshire, KA4 8HH** **Tel : 01563 821991** **Fax: 01563 822220** **email: talk2us@handv.co.uk**	**CONTRACT:** **NSGH, ADULT & CHILDREN'S HOSPITAL - PLANTROOM 124** **CLIENT:** **MERCURY ENGINEERING LTD.**	**TITLE:** **SCHEMATIC LAYOUT OF 124-AHU04 DIRTY EXTRACT LEVEL 7 ZONE H**	**DRAWN:** KL/SM **DATE:** 27/11/14 **DRG No.:** 5902/V20 **SHEET:** 8 OF 14

H & V
H & V
H & V

Commissioning Services Ltd
EST: 1975

Kilknowe Office,
16 Barrmill Road,
Galston,
Ayrshire, KA48HH.
TEL N°. 01563 821991
FAX N°. 01563 822220
E-Mail: talk2us@handv.co.uk

CONTRACT: NSGH, ADULT & CHILDRENS HOSPITAL – PLANTROOM 124

GRILLE TEST SHEET

SYSTEM: 124 – AHU 04 DIRTY EXTRACT (LEVELS 4, 5, 6 & 7)

Design Data		Initial Test Data		Final Test & Regulation Data		
Terminal or Ref No	Design Air Volume l/s	Balometer Initial Air Volume l/s	Balometer Final Air Volume l/s	Balometer Factor	Balometer Final Air Volume l/s	% Design
LEVEL 6						
*TG007	45	21	42	1.10	46.20	103
*TG006	45	22	42	1.10	46.20	103
*TG004	45	29	42	1.10	46.20	103
*TG005	45	23	42	1.10	46.20	103
*TG003	45	33	42	1.10	46.20	103
*TG002	45	40	42	1.10	46.20	103
*TG001	45	40	42	1.10	46.20	103
**TG011	45	46	43	1.10	47.30	105
**TG013	45	52	43	1.10	47.30	105
**TG012	45	58	42	1.10	46.20	103
**TG015	45	65	42	1.10	46.20	103
**TG016	45	54	42	1.10	46.20	103
**TG017	45	49	42	1.10	46.20	103
**TG018	45	70	42	1.10	46.20	103
**TG014	22	46	21	1.10	23.10	105

Remarks: *All Grilles prefixed with 509- **All Grilles prefixed with 510-

Instrument Used: HV12/15

Date: 02/10/14	Engineer: Stephen Murdoch & Gregor Fulton	Sheet 9 of 14

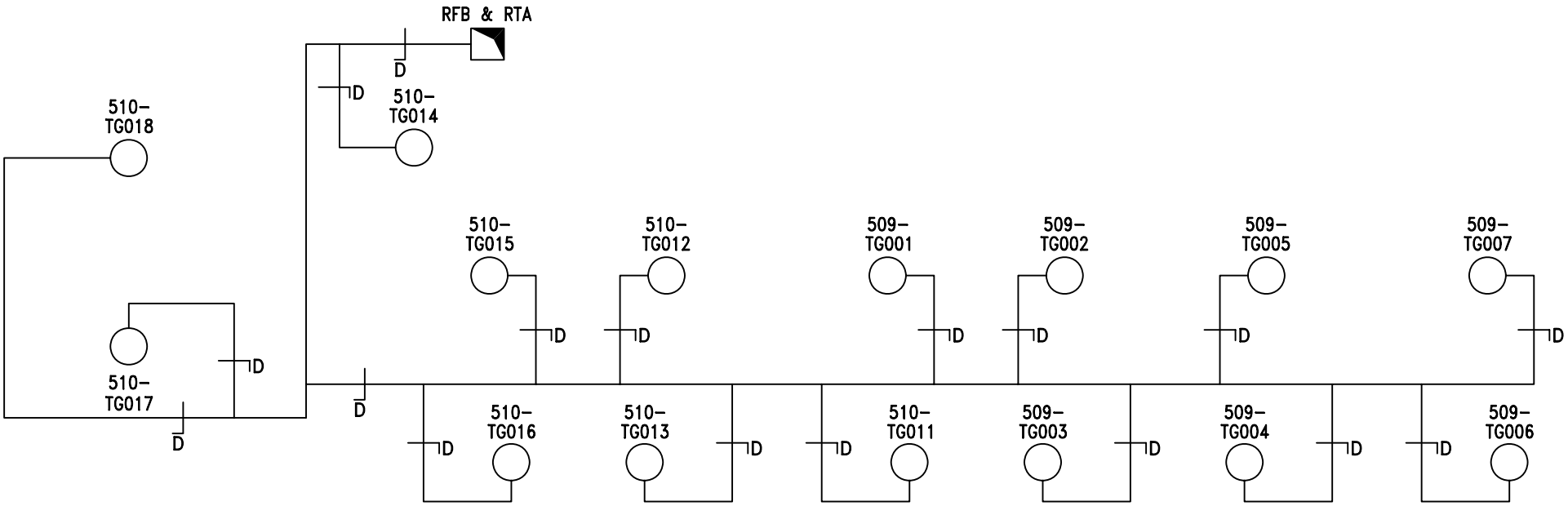

H&V Commissioning Services Limited
Kilknowe Office
16 Barrmill Road
Galston
East Ayrshire, KA4 8HH
Tel : 01563 821991
Fax: 01563 822220
email: talk2us@handv.co.uk

CONTRACT:
NSGH, ADULT & CHILDREN'S HOSPITAL - PLANTROOM 124

CLIENT:
MERCURY ENGINEERING LTD.

TITLE:
SCHEMATIC LAYOUT OF 124-AHU04 DIRTY EXTRACT LEVEL 6 ZONE H

DRAWN: KL/SM

DATE: 27/11/14

DRG No.: 5902/V19

SHEET: 10 OF 14

H & V
H & V
H & V

Commissioning Services Ltd

EST: 1975

Kilknowe Office,
16 Barrmill Road,
Galston,
Ayrshire, KA48HH.
TEL N°. 01563 821991
FAX N°. 01563 822220
E-Mail: talk2us@handv.co.uk

CONTRACT: NSGH, ADULT & CHILDRENS HOSPITAL – PLANTROOM 124

GRILLE TEST SHEET

SYSTEM: 124 – AHU 04 DIRTY EXTRACT (LEVELS 4, 5, 6 & 7)

Design Data		Initial Test Data		Final Test & Regulation Data		
Terminal or Ref No	Design Air Volume l/s	Balometer Initial Air Volume l/s	Balometer Final Air Volume l/s	Balometer Factor	Balometer Final Air Volume l/s	% Design
LEVEL 5						
*TG007	45	22	41	1.10	45.10	100
*TG006	45	29	41	1.10	45.10	100
*TG004	45	33	41	1.10	45.10	100
*TG005	45	24	41	1.10	45.10	100
*TG003	45	61	41	1.10	45.10	100
*TG002	45	60	41	1.10	45.10	100
*TG001	45	46	41	1.10	45.10	100
**TG011	45	54	41	1.10	45.10	100
**TG013	45	65	41	1.10	45.10	100
**TG012	45	89	41	1.10	45.10	100
**TG015	45	84	41	1.10	45.10	100
**TG016	45	91	42	1.10	46.20	103
**TG017	45	74	42	1.10	46.20	103
**TG018	45	65	42	1.10	46.20	103
**TG014	22	52	20	1.10	22.00	100

Remarks: *All Grilles prefixed with 509- **All Grilles prefixed with 510-

Instrument Used: HV12/15

Date: 02/10/14	Engineer: Stephen Murdoch & Gregor Fulton	Sheet 11 of 14

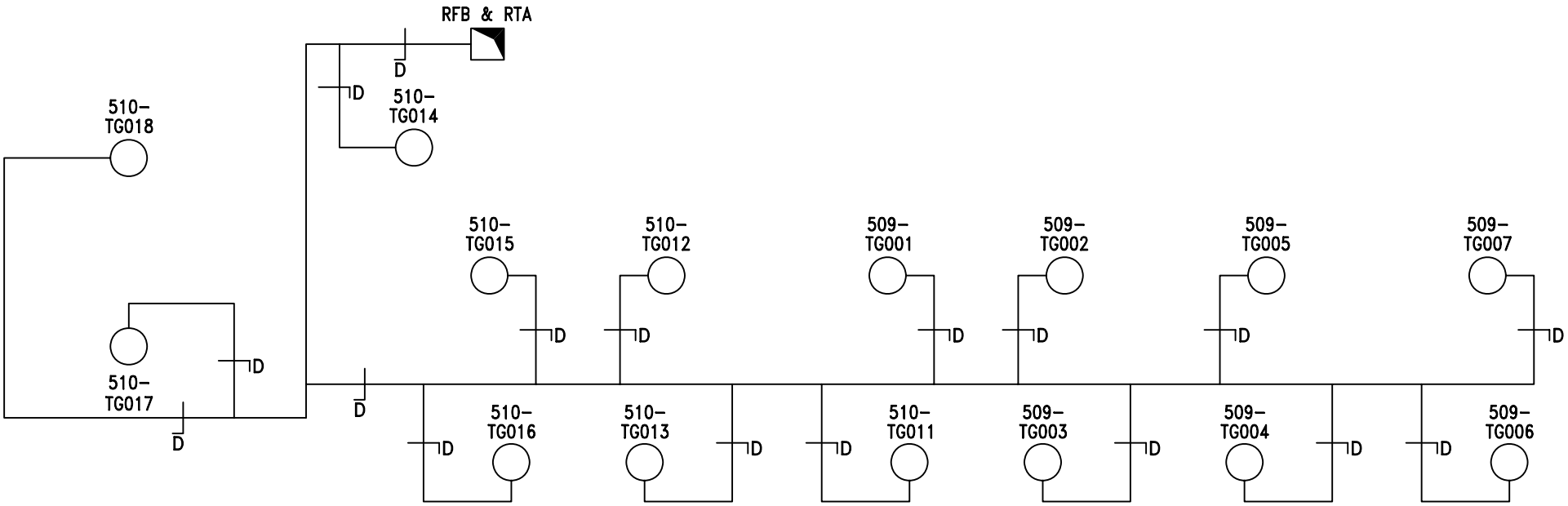

H&V Commissioning Services Limited
Kilknowe Office
16 Barrmill Road
Galston
East Ayrshire, KA4 8HH
Tel : 01563 821991
Fax: 01563 822220
email: talk2us@handv.co.uk

CONTRACT:
NSGH, ADULT & CHILDREN'S HOSPITAL - PLANTROOM 124

CLIENT:
MERCURY ENGINEERING LTD.

TITLE:
SCHEMATIC LAYOUT OF 124-AHU04 DIRTY EXTRACT LEVEL 5 ZONE H

DRAWN: KL/SM
DATE: 27/11/14
DRG No.: 5902/V18
SHEET: 12 OF 14

H & V
H & V
H & V

Commissioning Services Ltd

EST: 1975

Kilknowe Office,
16 Barrmill Road,
Galston,
Ayrshire, KA48HH.
TEL N°. 01563 821991
FAX N°. 01563 822220
E-Mail: talk2us@handv.co.uk

CONTRACT: NSGH, ADULT & CHILDRENS HOSPITAL – PLANTROOM 124

GRILLE TEST SHEET

SYSTEM: 124 – AHU 04 DIRTY EXTRACT (LEVELS 4, 5, 6 & 7)

Design Data		Initial Test Data		Final Test & Regulation Data		
Terminal or Ref No	Design Air Volume l/s	Balometer Initial Air Volume l/s	Balometer Final Air Volume l/s	Balometer Factor	Balometer Final Air Volume l/s	% Design
LEVEL 4						
**TG017	45	39	41	1.10	45.10	100
**TG016	45	51	42	1.10	46.20	103
**TG015	45	61	41	1.10	45.10	100
*TG005	29	13	27	1.10	29.70	102
*TG004	39	29	36	1.10	39.60	102
*TG006	45	29	42	1.10	46.20	103
*TG007	45	30	42	1.10	46.20	103
*TG003	45	33	41	1.10	45.10	100
*TG002	45	35	41	1.10	45.10	100
**TG010	45	49	41	1.10	45.10	100
**TG012	45	57	41	1.10	45.10	100
**TG011	45	57	41	1.10	45.10	100
**TG013	45	57	41	1.10	45.10	100
**TG014	45	57	41	1.10	45.10	100
**TG018	44	48	42	1.10	46.20	105

Remarks: *All Grilles prefixed with 509- **All Grilles prefixed with 510-

Instrument Used: HV12/15

Date: 02/10/14	Engineer: Stephen Murdoch & Gregor Fulton	Sheet 13 of 14

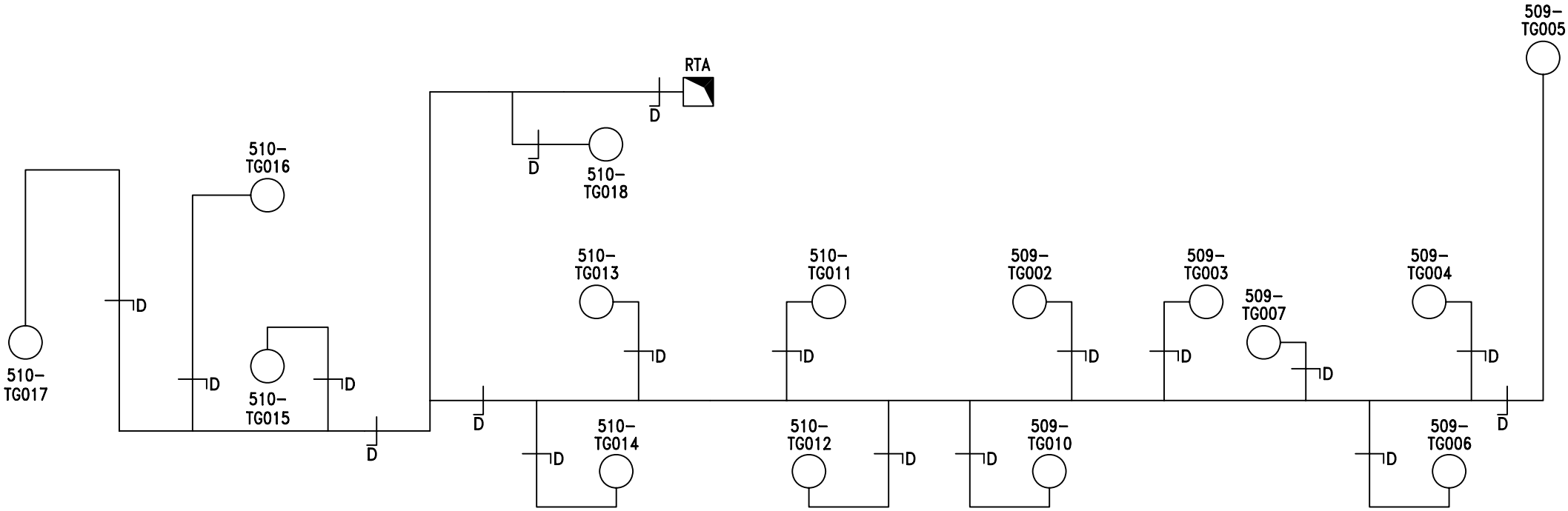

LEVEL 4

H&V Commissioning Services Limited
Kilknowe Office
16 Barrmill Road
Galston
East Ayrshire, KA4 8HH
Tel : 01563 821991
Fax: 01563 822220
email: talk2us@handv.co.uk

CONTRACT:
NSGH, ADULT & CHILDREN'S HOSPITAL - PLANTROOM 124

CLIENT:
MERCURY ENGINEERING LTD.

TITLE:
SCHEMATIC LAYOUT OF 124-AHU04 DIRTY EXTRACT LEVEL 4

DRAWN: LH/SM
DATE: 27/11/14
DRG No.: 5902/V17
SHEET: 14 OF 14

H & V
H & V
H & V

Commissioning Services Ltd
EST: 1975

Kilknowe Office,
16 Barrmill Road,
Galston,
Ayrshire, KA48HH.
TEL N°. 01563 821991
FAX N°. 01563 822220
E-Mail: talk2us@handv.co.uk

CONTRACT: NSGH, ADULT & CHILDRENS HOSPITAL – PLANTROOM 124

SYSTEM: 124 – AHU 05 DIRTY EXTRACT (LEVELS 4, 5, 6 & 7)

WITNESSING OF TESTING AND BALANCING

	Client Representative / Commissioning Manager	Client
Witnessed By:	David Wilson	
Representing:	Brookfield Multiplex	
Signature:	[redacted]	
Date:	12/12/14	
Witnessed By:		
Representing:		
Signature:		
Date:		

Remarks:

H & V
H & V
H & V

Commissioning Services Ltd
EST: 1975

Kilknowe Office,
16 Barrmill Road,
Galston,
Ayrshire, KA48HH.
TEL N°. 01563 821991
FAX N°. 01563 822220
E-Mail: talk2us@handv.co.uk

CONTRACT: NSGH, ADULT & CHILDRENS HOSPITAL – PLANTROOM 124

SYSTEM: 124 – AHU 05 DIRTY EXTRACT (LEVELS 4, 5, 6 & 7)

	AIR SYSTEMS PRE COMMISSIONING SHEET	✓	X	N/A
1.	Check AHU for damage and that all the components are secure	✓		
2.	Check the transit straps have been removed, if applicable	✓		
3.	Check pulleys are secure, tight, aligned and belts are correctly tensioned, if applicable	✓		
4.	Check with the controls engineer that the system is available to run and that plant rotation is correct	✓		
5.	Check all ductwork/air terminals are fitted and that air regulating dampers are open	✓		
6.	Check louvres are fitted and clear from obstructions, if applicable	✓		
7.	Check fire dampers are open, if applicable	✓		
8.	Check the motor overloads are suitable and set			✓
9.	Check VAV or CAV boxes are installed correctly and ready for use.			✓
10.	Check the floor plenums are complete, if applicable			✓
11.	Complete commissioning test sheets.	✓		

COMMENTS

H & V
H & V
H & V

Commissioning Services Ltd
EST: 1975

Kilknowe Office,
16 Barrmill Road,
Galston,
Ayshire, KA48HH.
TEL N°. 01563 821991
FAX N°. 01563 822220
E-Mail: talk2us@handv.co.uk

CONTRACT: NSGH, ADULT & CHILDRENS HOSPITAL – PLANTROOM 124

AHU TEST SHEET SYSTEM: 124 – AHU 05 DIRTY EXTRACT (LEVELS 4, 5, 6 & 7)

AHU											
AHU Manufacturer			Barkell		Fan Size			500			
Fan Manufacturer			Comefri		AHU Serial No			OP1B3024168			
Fan Type			Centrifugal		AHU Model N°.			TZAF 500 RFF			
			Design		**Test**					**% Design**	
Air Volume		(L/S)	3064		3193					104	
External Static Pressure		(Pa)	470		Inlet	286	Outlet	101	Total	387	
Fan Rotational Speed		(R.P.M)	2100		2100						
Filter Test Data	Pre Filter	(Pa)	Inlet	*	Outlet	*			ΔP	25	
	Sec Filter	(Pa)	Inlet	N/A	Outlet	N/A			ΔP	N/A	
MOTOR											
Manufacturer			TEC		Output kW			4.0			
Serial N°			1305-0562792		Motor Full Load Current			8.14	Amps		
Voltage			400		Motor Running Current			6.03	Amps		
			Design		**Test**						
Rotational Speed.			1430		1430						
DRIVE DETAILS											
Motor Pulley/Shaft Size		(mm∅)	SPZ 140	28	Motor Pulley Taper Lock Size			1610			
Fan Pulley/Shaft Size		(mm∅)	SPZ 150	50	Fan Pulley Taper Lock Size			2517			
Belt Type/Size			XPZ	1180	N°. Of Belts			4			
Shaft Centres mm			350		Adjustment			-	25	+	38 mm
Variable Speed Drive			Yes		Set Point			50Hz			

STANDBY PLANT							
Test Air Volume	3193	Inlet Pressure	286	Motor Rotational Speed	1430	Motor Running Current	
% Design	104	Outlet Pressure	101	Fan Rotational Speed	2100	6.03	Amps
Variable Speed Drive			Yes	Set Point		50Hz	

Comments. 2nd Motor Serial Number – 1305-0562769.

*Filter pressure taken from magnehelic gauge.

Instrument Used (Ref N°.) HV12/1, HV12/4 & HV12/5

Date: 13/10/14	Engineer: Stephen Murdoch & Grant Foster	Sheet 3 of 14

H & V
H & V
H & V

Commissioning Services Ltd
EST: 1975

Kilknowe Office,
16 Barrmill Road,
Galston,
Ayshire, KA48HH.
TEL N°. 01563 821991
FAX N°. 01563 822220
E-Mail: talk2us@handv.co.uk

CONTRACT: NSGH, ADULT & CHILDRENS HOSPITAL – PLANTROOM 124

DUCT VOLUME TEST SHEET

SYSTEM: 124 – AHU 05 DIRTY EXTRACT (LEVELS 4, 5, 6 & 7)

VELOCITY PROFILE (taken facing air flow) **TEST HOLE LOCATION: LEVEL 8, RISER T6**

Test Hole Ref		Duct Dia (mm)		Duct Size (mm)		Duct Area		Design Air Volume		Design Air Velocity	
				Width x Height		M2		L/S		M/S	
Main				1150	650	0.7475		3064		4.10	
4.70	4.50	4.20	4.50	4.30	4.30	4.00					
4.70	4.60	4.80	4.70	4.20	4.00	3.50					
4.80	4.80	4.50	4.60	3.90	3.50	3.20					
4.70	4.60	4.40	4.40	4.20	3.80	3.20					
Velocity Sub Totals											
18.90	18.50	17.90	18.20	16.60	15.60	13.90					

Total Velocity	Number of Readings	Average Velocity	Measured Air Volume	% Design	Static Pressure
M/S		M/S	L/S		Pa
119.6	28	4.27	3193	104	174

Remarks:

Instrument Used: HV12/1

Date: 13/10/14 | Engineer: Stephen Murdoch & Gregor Fulton | Sheet 4 of 14

H & V
H & V
H & V

Commissioning Services Ltd
EST: 1975

Kilknowe Office,
16 Barrmill Road,
Galston,
Ayshire, KA48HH.
TEL N°. 01563 821991
FAX N°. 01563 822220
E-Mail: talk2us@handv.co.uk

CONTRACT: NSGH, ADULT & CHILDRENS HOSPITAL – PLANTROOM 124

DUCT VOLUME TEST SHEET

SYSTEM: 124 – AHU 05 DIRTY EXTRACT (LEVELS 4, 5, 6 & 7)

VELOCITY PROFILE (taken facing air flow) **TEST HOLE LOCATION: CEILING VOID**

Test Hole Ref		Duct Dia (mm)		Duct Size (mm)		Duct Area		Design Air Volume		Design Air Velocity	
				Width x Height		M2		L/S		M/S	
TH1		160				0.0201		45		2.24	
2.40	2.40										
2.20	2.10										
2.10	2.20										
2.30	2.20										
Velocity Sub Totals											
9.00	8.90										

Total Velocity	Number of Readings	Average Velocity	Measured Air Volume	% Design	Static Pressure
M/S		M/S	L/S		Pa
17.9	8	2.24	45	100	19

Remarks: Test Hole serves 510-TG001, Level 4.
Test Volume = 45 l/s ÷ Balometer Volume = 40 l/s = 1.13 Factor

Instrument Used: HV12/1

Date: 13/10/14 | Engineer: Stephen Murdoch & Gregor Fulton | Sheet 5 of 14

PLANTROOM 124 LEVEL 12

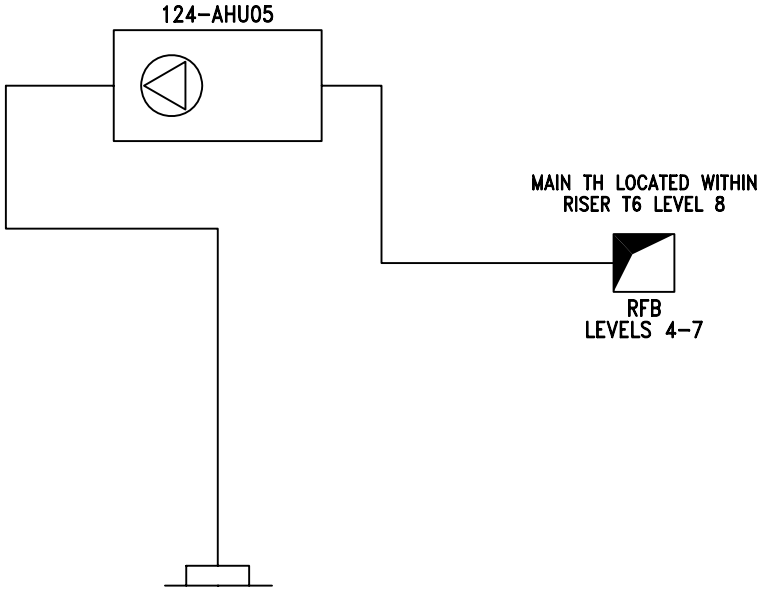

H&V Commissioning Services Limited
Kilknowe Office
16 Barrmill Road
Galston
East Ayrshire, KA4 8HH
Tel : 01563 821991
Fax: 01563 822220
email: talk2us@handv.co.uk

CONTRACT:
NSGH, ADULT & CHILDREN'S HOSPITAL - PLANTROOM 124

CLIENT:
MERCURY ENGINEERING LTD.

TITLE:
SCHEMATIC LAYOUT OF 124-AHU05 EXTRACT (4TH-7TH FLOOR)

DRAWN: LH/SM

DATE: 27/11/14

DRG No.: 5902/V26

SHEET: 6 OF 14

H & V
H & V
H & V

Commissioning Services Ltd

EST: 1975

Kilknowe Office,
16 Barrmill Road,
Galston,
Ayrshire, KA48HH.
TEL N°. 01563 821991
FAX N°. 01563 822220
E-Mail: talk2us@handv.co.uk

CONTRACT: NSGH, ADULT & CHILDRENS HOSPITAL – PLANTROOM 124

GRILLE TEST SHEET

SYSTEM: 124 – AHU 05 DIRTY EXTRACT (LEVELS 4, 5, 6 & 7)

Design Data		Initial Test Data		Final Test & Regulation Data		
Terminal or Ref No	Design Air Volume l/s	Balometer Initial Air Volume l/s	Balometer Final Air Volume l/s	Balometer Factor	Balometer Final Air Volume l/s	% Design
LEVEL 7						
*TG001	45	31	41	1.13	46.33	103
*TG003	45	41	42	1.13	47.46	105
*TG002	45	40	42	1.13	47.46	105
*TG004	45	56	42	1.13	47.46	105
*TG005	45	54	42	1.13	47.46	105
**TG001	35	19	34	1.13	38.42	110
**TG003	45	24	40	1.13	45.20	100
**TG002	45	23	40	1.13	45.20	100
**TG005	45	35	40	1.13	45.20	100
**TG004	45	37	42	1.13	47.46	105
**TG006	45	41	40	1.13	45.20	100
**TG007	45	41	41	1.13	46.33	103
*TG008	45	45	41	1.13	46.33	103
*TG006	45	51	43	1.13	48.59	108
*TG007	45	47	42	1.13	47.46	105
*TG009	62	115	56	1.13	63.28	102
*TG010	59	89	53	1.13	59.89	102

Remarks: *All Grilles prefixed with 510- **All Grilles prefixed with 511-

Instrument Used: HV12/15

Date: 13/10/14	Engineer: Stephen Murdoch & Gregor Fulton	Sheet 7 of 14

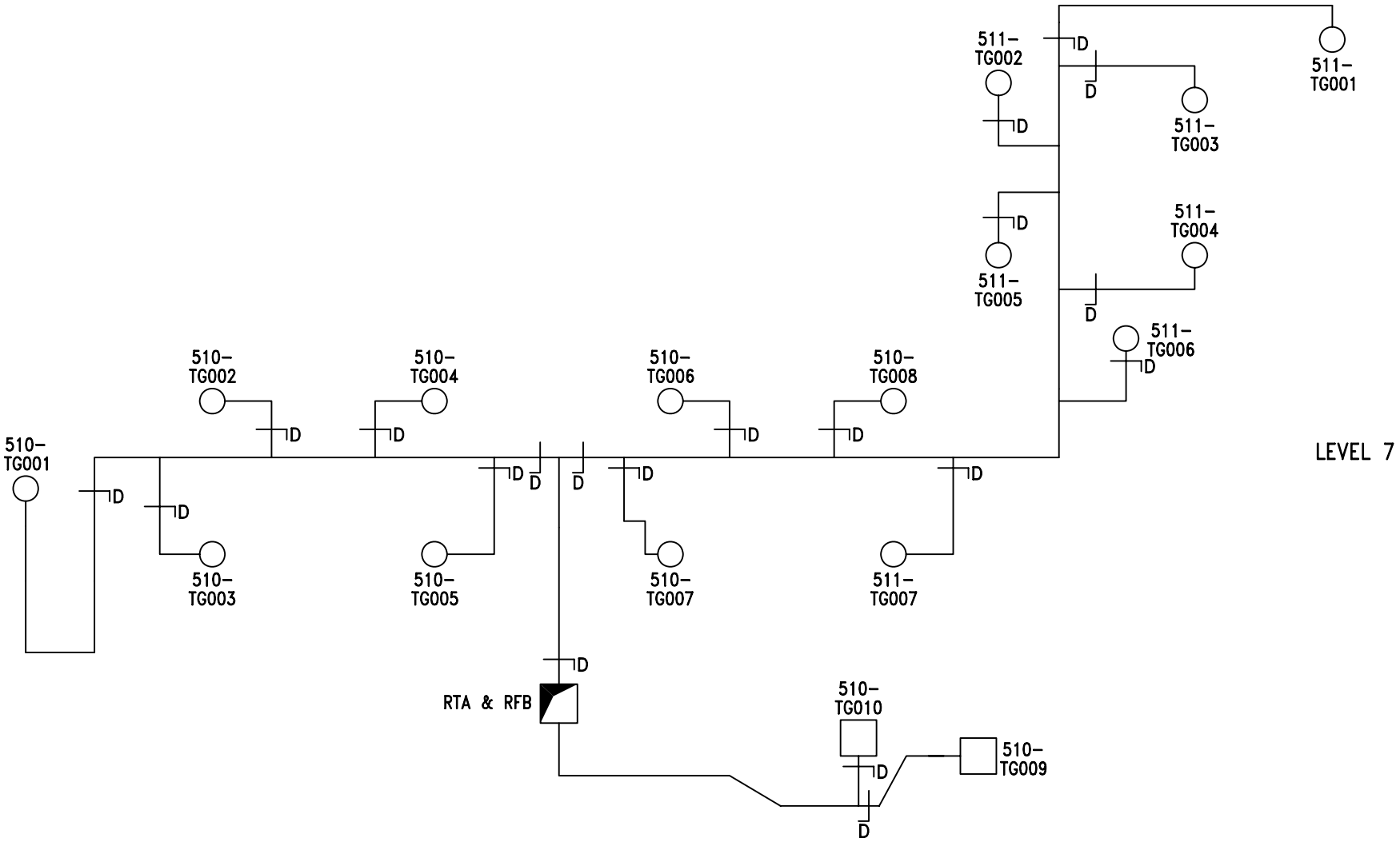

H&V Commissioning Services Limited
Kilknowe Office
16 Barrmill Road
Galston
East Ayrshire, KA4 8HH
Tel : 01563 821991
Fax: 01563 822220
email: talk2us@handv.co.uk

CONTRACT:
NSGH, ADULT & CHILDREN'S HOSPITAL - PLANTROOM 124

CLIENT:
MERCURY ENGINEERING LTD.

TITLE:
SCHEMATIC LAYOUT OF 124-AHU05 DIRTY EXTRACT LEVEL 7

DRAWN: LH/SM
DATE: 27/11/14
DRG No.: 5902/V30
SHEET: 8 OF 14

H & V
H & V
H & V

Commissioning Services Ltd

EST: 1975

Kilknowe Office,
16 Barrmill Road,
Galston,
Ayrshire, KA48HH.
TEL N°. 01563 821991
FAX N°. 01563 822220
E-Mail: talk2us@handv.co.uk

CONTRACT: NSGH, ADULT & CHILDRENS HOSPITAL – PLANTROOM 124

GRILLE TEST SHEET

SYSTEM: 124 – AHU 05 DIRTY EXTRACT (LEVELS 4, 5, 6 & 7)

Design Data		Initial Test Data		Final Test & Regulation Data		
Terminal or Ref No	Design Air Volume l/s	Balometer Initial Air Volume l/s	Balometer Final Air Volume l/s	Balometer Factor	Balometer Final Air Volume l/s	% Design
LEVEL 6						
*TG001	45	28	40	1.13	45.20	100
*TG003	45	38	42	1.13	47.46	105
*TG002	45	39	40	1.13	45.20	100
*TG004	45	40	43	1.13	48.59	108
*TG005	45	44	40	1.13	45.20	100
**TG001	35	19	33	1.13	37.29	107
**TG003	45	23	40	1.13	45.20	100
**TG002	45	21	41	1.13	46.33	103
**TG005	45	29	41	1.13	46.33	103
**TG004	45	26	40	1.13	45.20	100
**TG006	45	32	40	1.13	45.20	100
**TG007	45	33	43	1.13	48.59	108
*TG008	45	40	42	1.13	47.46	105
*TG006	45	21	40	1.13	45.20	100
*TG007	45	49	42	1.13	47.46	105
*TG009	62	102	57	1.13	64.41	104
*TG010	59	82	54	1.13	61.02	103

Remarks: *All Grilles prefixed with 510- **All Grilles prefixed with 511-

Instrument Used: HV12/15

Date: 13/10/14	Engineer: Stephen Murdoch & Gregor Fulton	Sheet 9 of 14

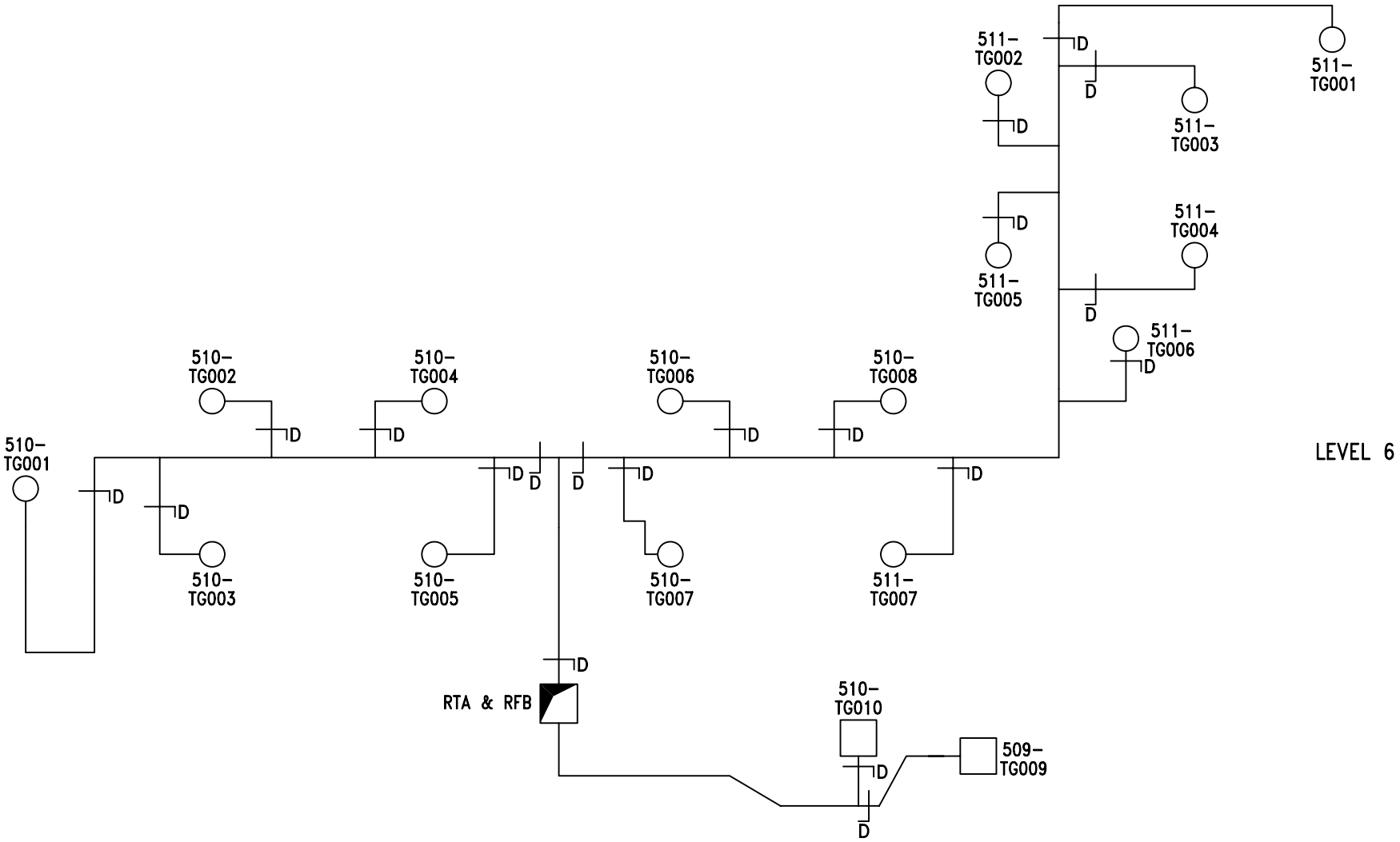

H&V Commissioning Services Limited
Kilknowe Office
16 Barrmill Road
Galston
East Ayrshire, KA4 8HH
Tel : 01563 821991
Fax: 01563 822220
email: talk2us@handv.co.uk

CONTRACT:
NSGH, ADULT & CHILDREN'S HOSPITAL - PLANTROOM 124

CLIENT:
MERCURY ENGINEERING LTD.

TITLE:
SCHEMATIC LAYOUT OF 124-AHU05 DIRTY EXTRACT LEVEL 6

DRAWN: LH/SM

DATE: 27/11/14

DRG No.: 5902/V29

SHEET: 10 OF 14

H & V
H & V
H & V

Commissioning Services Ltd
EST: 1975

Kilknowe Office,
16 Barrmill Road,
Galston,
Ayrshire, KA48HH.
TEL N°. 01563 821991
FAX N°. 01563 822220
E-Mail: talk2us@handv.co.uk

CONTRACT: NSGH, ADULT & CHILDRENS HOSPITAL – PLANTROOM 124

GRILLE TEST SHEET

SYSTEM: 124 – AHU 05 DIRTY EXTRACT (LEVELS 4, 5, 6 & 7)

Design Data		Initial Test Data		Final Test & Regulation Data		
Terminal or Ref No	Design Air Volume l/s	Balometer Initial Air Volume l/s	Balometer Final Air Volume l/s	Balometer Factor	Balometer Final Air Volume l/s	% Design
LEVEL 5						
*TG001	45	22	40	1.13	45.20	100
*TG003	45	38	41	1.13	46.33	103
*TG002	45	45	40	1.13	45.20	100
*TG004	45	45	40	1.13	45.20	100
*TG005	45	47	43	1.13	48.59	108
**TG001	35	22	34	1.13	38.42	110
**TG003	45	29	41	1.13	46.33	103
**TG002	45	22	40	1.13	45.20	100
**TG005	45	36	40	1.13	45.20	100
**TG004	45	35	40	1.13	45.20	100
**TG006	45	22	40	1.13	45.20	100
**TG007	45	33	40	1.13	45.20	100
*TG008	45	40	40	1.13	45.20	100
*TG006	45	46	41	1.13	46.33	103
*TG007	45	47	40	1.13	45.20	100
*TG009	62	69	58	1.13	65.54	106
*TG010	59	101	56	1.13	63.28	107

Remarks: *All Grilles prefixed with 510- **All Grilles prefixed with 511-

Instrument Used: HV12/15

Date: 13/10/14	Engineer: Stephen Murdoch & Gregor Fulton	Sheet 11 of 14

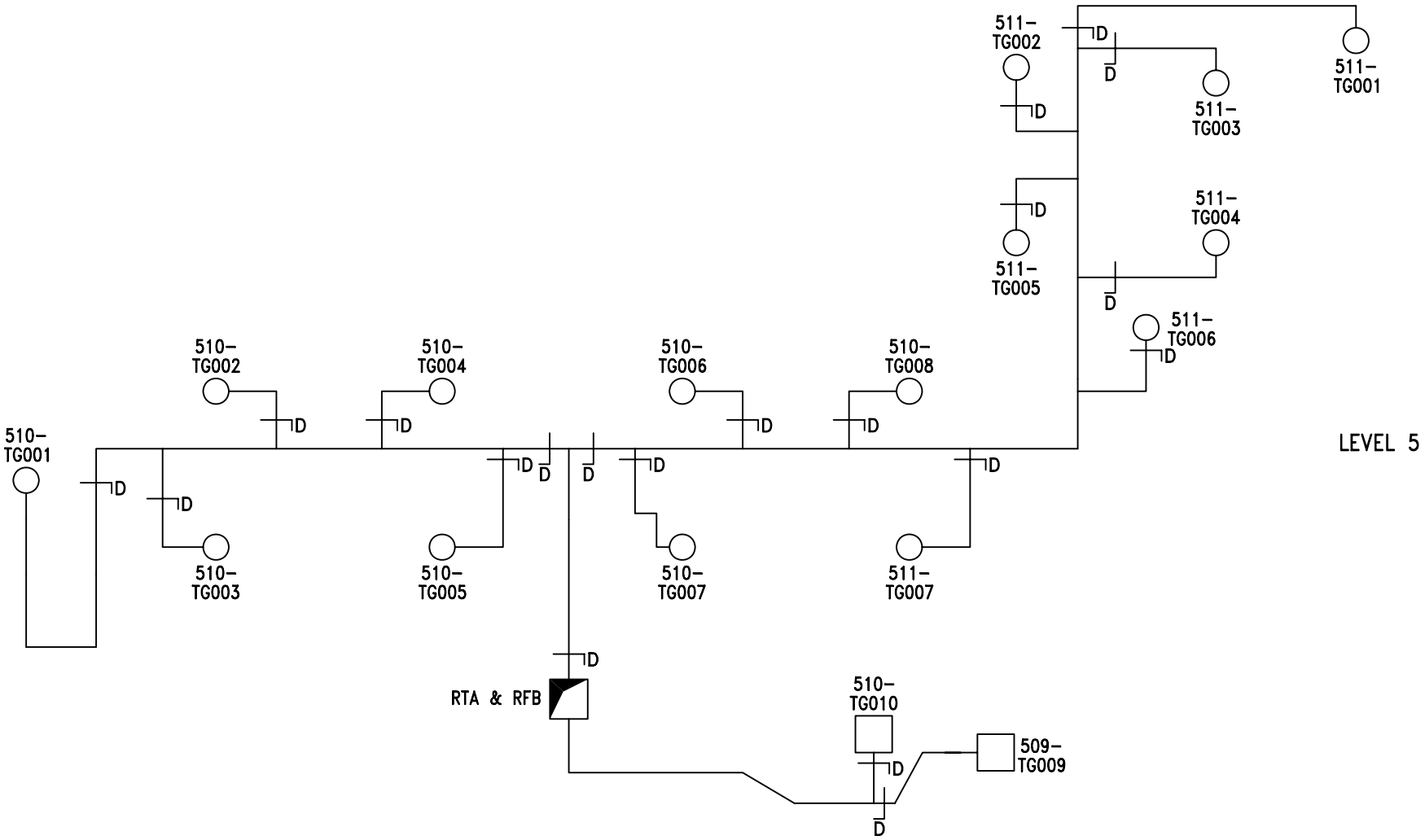

H&V Commissioning Services Limited
Kilknowe Office
16 Barrmill Road
Galston
East Ayrshire, KA4 8HH
Tel : 01563 821991
Fax: 01563 822220
email: talk2us@handv.co.uk

CONTRACT:
NSGH, ADULT & CHILDREN'S HOSPITAL - PLANTROOM 124

CLIENT:
MERCURY ENGINEERING LTD.

TITLE:
SCHEMATIC LAYOUT OF 124-AHU05 DIRTY EXTRACT LEVEL 5

DRAWN: LH/SM

DATE: 27/11/14

DRG No.: 5902/V28

SHEET: 12 OF 14

H & V
H & V
H & V

Commissioning Services Ltd
EST: 1975

Kilknowe Office,
16 Barrmill Road,
Galston,
Ayrshire, KA48HH.
TEL N°. 01563 821991
FAX N°. 01563 822220
E-Mail: talk2us@handv.co.uk

CONTRACT: NSGH, ADULT & CHILDRENS HOSPITAL – PLANTROOM 124

GRILLE TEST SHEET

SYSTEM: 124 – AHU 05 DIRTY EXTRACT (LEVELS 4, 5, 6 & 7)

Design Data		Initial Test Data		Final Test & Regulation Data		
Terminal or Ref No	Design Air Volume l/s	Balometer Initial Air Volume l/s	Balometer Final Air Volume l/s	Balometer Factor	Balometer Final Air Volume l/s	% Design
LEVEL 4						
*TG001	45	30	40	1.13	45.20	100
*TG003	45	37	40	1.13	45.20	100
*TG002	45	38	40	1.13	45.20	100
*TG004	45	49	40	1.13	45.20	100
*TG005	45	47	40	1.13	45.20	100
**TG001	45	26	40	1.13	45.20	100
**TG002	45	24	40	1.13	45.20	100
**TG003	45	30	42	1.13	47.46	105
**TG004	45	29	40	1.13	45.20	100
**TG005	45	30	40	1.13	45.20	100
**TG008	45	43	40	1.13	45.20	100
**TG007	45	47	40	1.13	45.20	100
*TG006	45	43	41	1.13	46.33	103
***TG001	62	77	60	1.13	67.80	109
*TG009	59	84	57	1.13	64.41	109

Remarks: *All Grilles prefixed with 510- **All Grilles prefixed with 511- ***All grilles prefixed with 509-

Instrument Used: HV12/15

Date: 02/10/14	Engineer: Stephen Murdoch & Gregor Fulton	Sheet 13 of 14

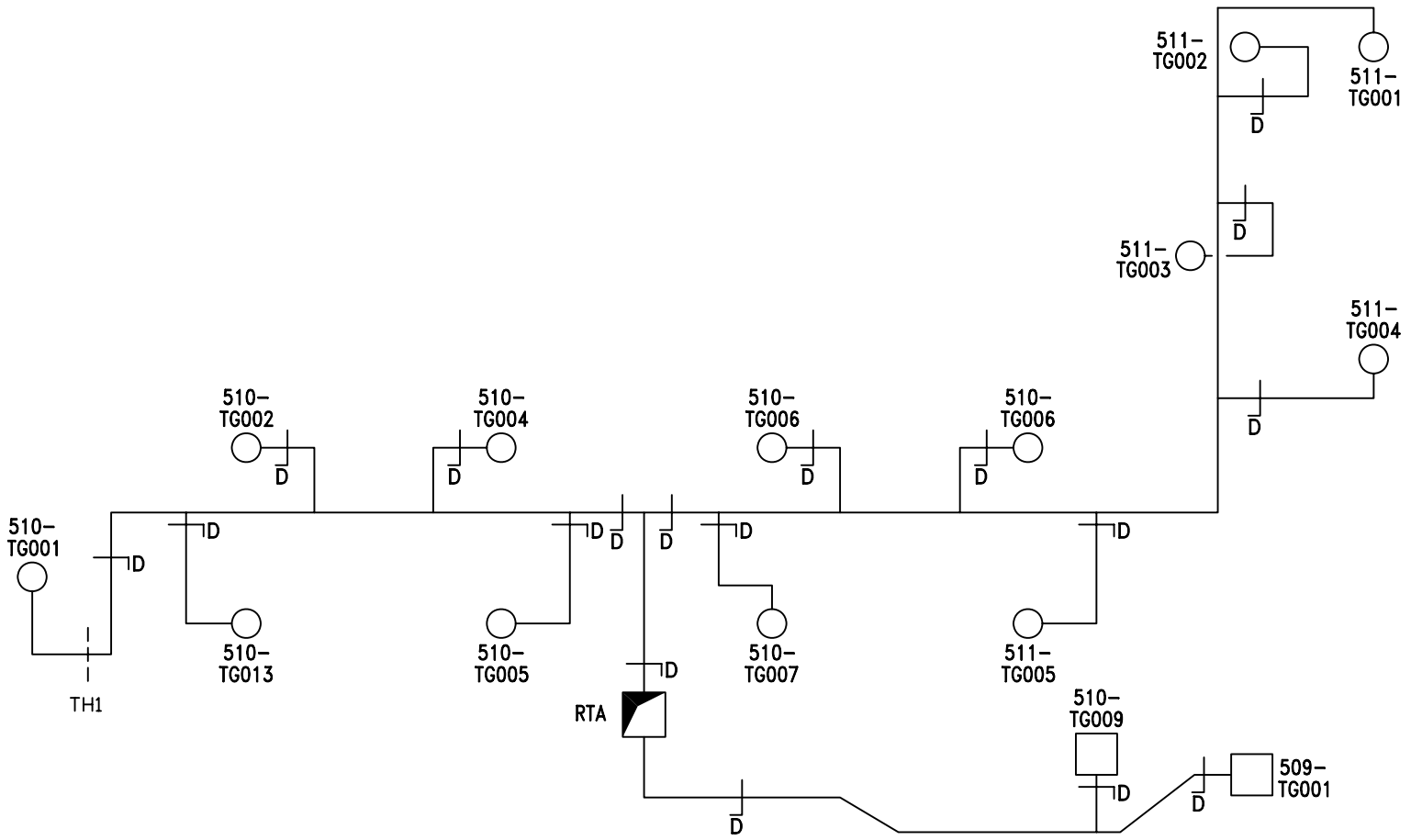

H&V Commissioning Services Limited
Kilknowe Office
16 Barrmill Road
Galston
East Ayrshire, KA4 8HH
Tel : 01563 821991
Fax: 01563 822220
email: talk2us@handv.co.uk

CONTRACT:
NSGH, ADULT & CHILDREN'S HOSPITAL - PLANTROOM 124

CLIENT:
MERCURY ENGINEERING LTD.

TITLE:
SCHEMATIC LAYOUT OF 124-AHU05 DIRTY EXTRACT LEVEL 4

DRAWN: LH/SM
DATE: 27/11/14
DRG No.: 5902/V27
SHEET: 14 OF 14

H & V
H & V
H & V

Commissioning Services Ltd
EST: 1975

Kilknowe Office,
16 Barrmill Road,
Galston,
Ayrshire, KA48HH.
TEL N°. 01563 821991
FAX N°. 01563 822220
E-Mail: talk2us@handv.co.uk

CONTRACT: NSGH, ADULT & CHILDRENS HOSPITAL – PLANTROOM 124

SYSTEM: 124 - AHU 06 SUPPLY (LEVELS 4 5 6 & 7)

WITNESSING OF TESTING AND BALANCING

	Client Representative / Commissioning Manager	Client
Witnessed By:	David Wilson	
Representing:	Brookfield Multiplex	
Signature:	[redacted]	
Date:	12/12/14	
Witnessed By:		
Representing:		
Signature:		
Date:		

Remarks:

H & V
H & V
H & V

Commissioning Services Ltd
EST: 1975

Kilknowe Office,
16 Barrmill Road,
Galston,
Ayrshire, KA48HH.
TEL N°. 01563 821991
FAX N°. 01563 822220
E-Mail: talk2us@handv.co.uk

CONTRACT: NSGH, ADULT & CHILDRENS HOSPITAL – PLANTROOM 124

SYSTEM: 124 – AHU 06 SUPPLY (LEVELS 4, 5, 6 & 7)

	AIR SYSTEMS PRE COMMISSIONING SHEET	✓	X	N/A
1.	Check AHU for damage and that all the components are secure	✓		
2.	Check the transit straps have been removed, if applicable	✓		
3.	Check pulleys are secure, tight, aligned and belts are correctly tensioned, if applicable	✓		
4.	Check with the controls engineer that the system is available to run and that plant rotation is correct	✓		
5.	Check all ductwork/air terminals are fitted and that air regulating dampers are open	✓		
6.	Check louvres are fitted and clear from obstructions, if applicable	✓		
7.	Check fire dampers are open, if applicable	✓		
8.	Check the motor overloads are suitable and set			✓
9.	Check VAV or CAV boxes are installed correctly and ready for use.			✓
10.	Check the floor plenums are complete, if applicable			✓
11.	Complete commissioning test sheets.	✓		

COMMENTS

H & V
H & V
H & V

Commissioning Services Ltd
EST: 1975

Kilknowe Office,
16 Barrmill Road,
Galston,
Ayshire, KA48HH.
TEL N°. 01563 821991
FAX N°. 01563 822220
E-Mail: talk2us@handv.co.uk

CONTRACT: NSGH, ADULT & CHILDRENS HOSPITAL – PLANTROOM 124

AHU TEST SHEET

SYSTEM: 124 – AHU 06 SUPPLY (LEVELS 4, 5, 6 & 7)

AHU											
AHU Manufacturer			Barkell		Fan Size			450			
Fan Manufacturer			Comefri		AHU Serial No			OP133050963			
Fan Type			Centrifugal		AHU Model N°.			TZAF 450 RFF			
			Design		**Test**					**% Design**	
Air Volume (L/S)			3010		3168					105	
External Static Pressure (Pa)			430		Inlet	170	Outlet	231	Total	401	
Fan Rotational Speed (R.P.M)			2400		2700						
Filter Test Data	Pre Filter (Pa)	Inlet	*		Outlet	*			ΔP	*55	
	Sec Filter (Pa)	Inlet	*		Outlet	*			ΔP	*75	
MOTOR											
Manufacturer			TEC		Output kW			5.5			
Serial N°			1305-0265 834		Motor Full Load Current			10.9	Amps		
Voltage			400		Motor Running Current			8.12	Amps		
			Design		**Test**						
Rotational Speed.			1450		1363						
DRIVE DETAILS											
Motor Pulley/Shaft Size (mm∅)		SPZ 180	38		Motor Pulley Taper Lock Size			2012			
Fan Pulley/Shaft Size (mm∅)		SPZ 150	50		Fan Pulley Taper Lock Size			2517			
Belt Type/Size		XPZ	1120		N°. Of Belts			4			
Shaft Centres mm		300			Adjustment			-	30	+	30 mm
Variable Speed Drive		Yes			Set Point			47Hz			
STANDBY PLANT											
Test Air Volume	3168	Inlet Pressure	170		Motor Rotational Speed	1363		Motor Running Current			
% Design	105	Outlet Pressure	231		Fan Rotational Speed	2700		8.12 Amps			
Variable Speed Drive			Yes		Set Point	47Hz					

Comments. 2nd Motor Serial Number – 1305-0265860

*Filter pressure taken from magnehelic gauge.

Control static pressure sensor = 236Pa.

Instrument Used (Ref N°.) HV12/1, HV12/4 & HV12/5

Date: 17/10/14	Engineer: Stephen Murdoch & Gregor Fulton	Sheet 3 of 14

H & V
H & V
H & V

Commissioning Services Ltd
EST: 1975

Kilknowe Office,
16 Barrmill Road,
Galston,
Ayshire, KA48HH.
TEL N°. 01563 821991
FAX N°. 01563 822220
E-Mail: talk2us@handv.co.uk

CONTRACT: NSGH, ADULT & CHILDRENS HOSPITAL – PLANTROOM 124

DUCT VOLUME TEST SHEET

SYSTEM: 124 – AHU 06 SUPPLY (LEVELS 4, 5, 6 & 7)

VELOCITY PROFILE (taken facing air flow) **TEST HOLE LOCATION: LEVEL 8 RISER T5**

Test Hole Ref		Duct Dia (mm)		Duct Size (mm)		Duct Area		Design Air Volume		Design Air Velocity	
				Width x Height		M2		L/S		M/S	
Main				950	750	0.7125		3010		4.22	
4.20	4.30	4.50	4.40	4.40	3.90						
4.60	4.60	4.60	4.70	4.60	4.00						
4.40	4.80	4.80	4.70	4.60	4.40						
4.10	4.70	4.70	4.40	4.30	4.00						
Velocity Sub Totals											
17.30	18.40	18.60	18.20	17.90	16.30						

Total Velocity	Number of Readings	Average Velocity	Measured Air Volume	% Design	Static Pressure
M/S		M/S	L/S		Pa
106.7	24	4.45	3168	105	142

Remarks:

Instrument Used: HV12/1

Date: 17/10/14 | Engineer: Stephen Murdoch & Gregor Fulton | Sheet 4 of 14

H & V
H & V
H & V

Commissioning Services Ltd
EST: 1975

Kilknowe Office,
16 Barrmill Road,
Galston,
Ayshire, KA48HH.
TEL N°. 01563 821991
FAX N°. 01563 822220
E-Mail: talk2us@handv.co.uk

CONTRACT: NSGH, ADULT & CHILDRENS HOSPITAL – PLANTROOM 124

DUCT VOLUME TEST SHEET

SYSTEM: 124 – AHU 06 SUPPLY (LEVELS 4, 5, 6 & 7)

VELOCITY PROFILE (taken facing air flow) **TEST HOLE LOCATION: CEILING VOID**

Test Hole Ref		Duct Dia (mm)		Duct Size (mm)		Duct Area		Design Air Volume		Design Air Velocity	
				Width x Height		M2		L/S		M/S	
TH1		160				0.0201		35		1.74	
1.80	1.80										
1.70	1.80										
1.80	1.90										
1.60	1.50										
Velocity Sub Totals											
6.90	7.00										

Total Velocity	Number of Readings	Average Velocity	Measured Air Volume	% Design	Static Pressure
M/S		M/S	L/S		Pa
13.9	8	1.74	35	100	12

Remarks: Test Hole serves 510-SG002, Level 5.
Test Volume = 35 l/s ÷ Balometer Volume = 33 l/s = 1.06 Factor

Instrument Used: HV12/1

Date: 11/10/14 | Engineer: Stephen Murdoch & Gregor Fulton | Sheet 5 of 14

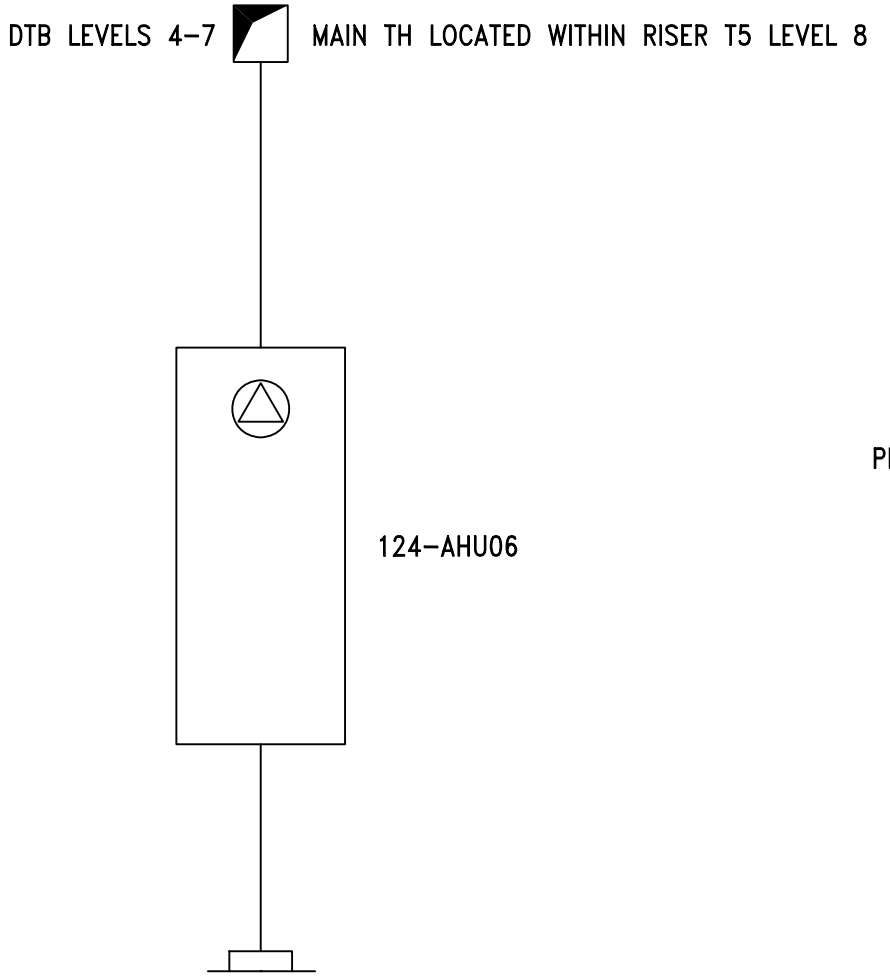

SHEET: 6 OF 14

H&V Commissioning Services Limited
Kilknowe Office
16 Barrmill Road
Galston
East Ayrshire, KA4 8HH
Tel : 01563 821991
A49618320
Fax: 01563 822220 email: talk2us@handv.co.uk

CONTRACT:
NSGH, ADULT & CHILDREN'S HOSPITAL - PLANTROOM 124

CLIENT:
MERCURY ENGINEERING UK

TITLE:
SCHEMATIC LAYOUT OF

124-AHU 06 SUPPLY (4TH-7TH FLOOR)

DRAWN: LH/SM

DATE: 15/12/14

DRG. No.: 5902/V37

H & V
H & V
H & V

Commissioning Services Ltd
EST: 1975

Kilknowe Office,
16 Barrmill Road,
Galston,
Ayrshire, KA48HH.
TEL N°. 01563 821991
FAX N°. 01563 822220
E-Mail: talk2us@handv.co.uk

CONTRACT: NSGH, ADULT & CHILDRENS HOSPITAL – PLANTROOM 124

GRILLE TEST SHEET SYSTEM: 124 – AHU 06 SUPPLY (LEVELS 4, 5, 6 & 7)

LEVEL 7

Design Data		Initial Test Data		Final Test & Regulation Data		
Terminal or Ref No	Design Air Volume l/s	Balometer Initial Air Volume l/s	Balometer Final Air Volume l/s	Balometer Factor	Balometer Final Air Volume l/s	% Design
*SG001	35	21	34	1.06	36.04	103
*SG002	35	23	33	1.06	34.98	100
*SG003	33	30	32	1.06	33.92	103
*SG004	25	20	25	1.06	26.50	106
*SG005	78	67	77	1.06	81.62	105
**SG006	15	13	15	1.06	15.90	106
**SG007	60	101	58	1.06	61.48	102
*SG006	47	28	46	1.06	48.76	104
*SG007	49	53	47	1.06	49.82	102
***SG003	45	32	44	1.06	46.64	104
***SG002	10	14	10	1.06	10.60	106
***SG004	19	14	19	1.06	20.14	106
***SG005	50	45	48	1.06	50.88	102
***SG001	40	50	38	1.06	40.28	101
**SG005	60	90	57	1.06	60.42	101
**SG004	90	147	89	1.06	94.34	105
**SG003	20	34	19	1.06	20.14	101

Remarks: *Grilles prefixed with 7-510-. **Grilles prefixed with 7-511-. ***Grilles prefixed with 7-509-.

Instrument Used: HV12/15

Date: 17/10/14	Engineer: Stephen Murdoch & Gregor Fulton	Sheet 7 of 14

LEVEL 7

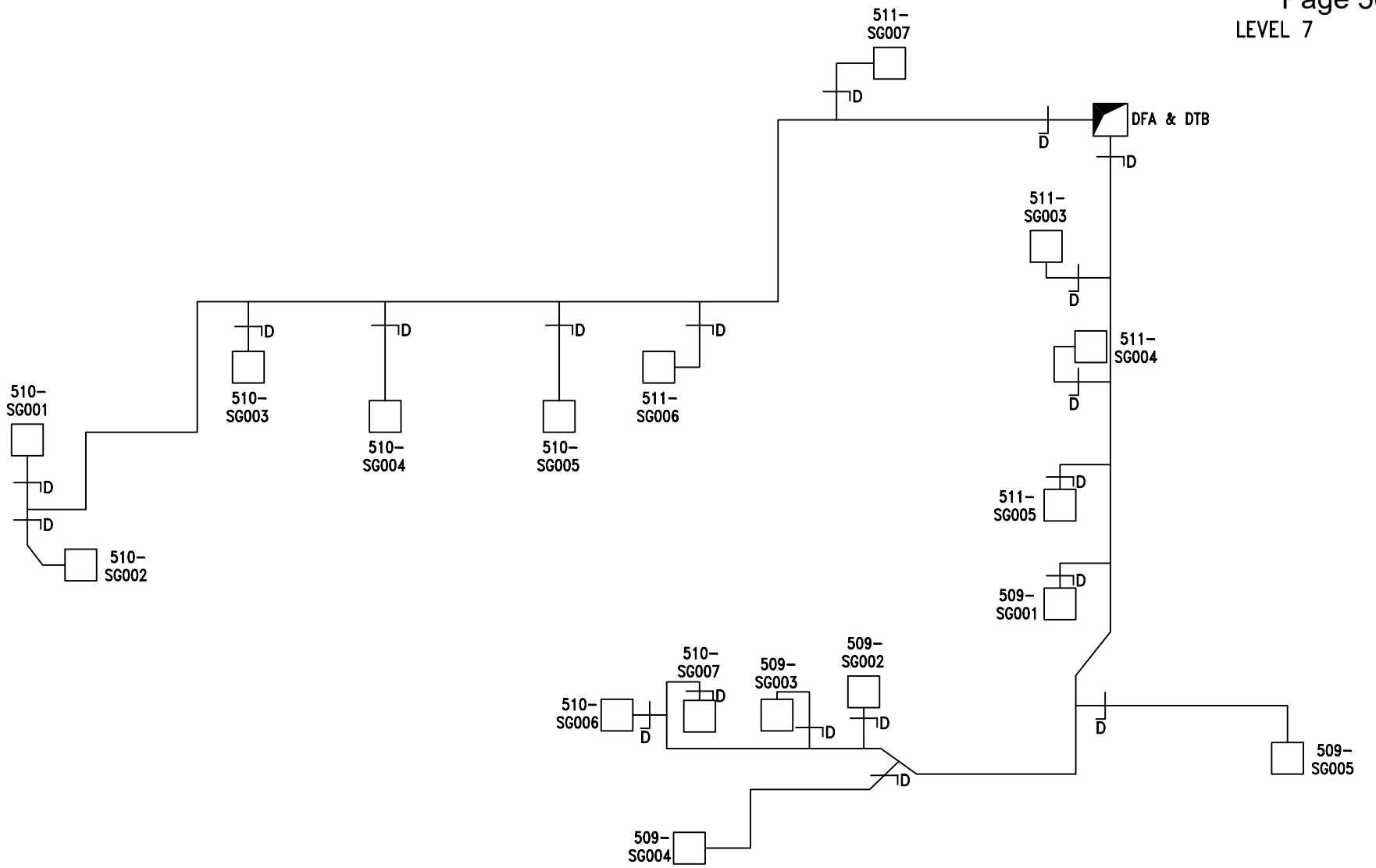

H&V Commissioning Services Limited
Kilknowe Office
16 Barrmill Road
Galston
East Ayrshire, KA4 8HH
Tel : 01563 821991
Fax: 01563 822220
email: talk2us@handv.co.uk

CONTRACT:
NSGH, ADULT & CHILDREN'S HOSPITAL - PLANTROOM 124

CLIENT:
MERCURY ENGINEERING LTD.

TITLE:
SCHEMATIC LAYOUT OF 124-AHU06 SUPPLY LEVEL 7

DRAWN: LH/DG

DATE: 16/01/15

DRG No.: 5902/V43

SHEET: 8 OF 14

© H&V Commissioning Services Limited 2020

H & V
H & V
H & V

Commissioning Services Ltd
EST: 1975

Kilknowe Office,
16 Barrmill Road,
Galston,
Ayrshire, KA48HH.
TEL N°. 01563 821991
FAX N°. 01563 822220
E-Mail: talk2us@handv.co.uk

CONTRACT: NSGH, ADULT & CHILDRENS HOSPITAL – PLANTROOM 124

GRILLE TEST SHEET SYSTEM: 124 – AHU 06 SUPPLY (LEVELS 4, 5, 6 & 7)

LEVEL 6

Design Data		Initial Test Data		Final Test & Regulation Data		
Terminal or Ref No	Design Air Volume l/s	Balometer Initial Air Volume l/s	Balometer Final Air Volume l/s	Balometer Factor	Balometer Final Air Volume l/s	% Design
*SG001	35	20	33	1.06	34.98	100
*SG002	35	19	33	1.06	34.98	100
*SG003	33	30	33	1.06	34.98	106
*SG004	25	22	25	1.06	26.50	106
*SG005	78	62	79	1.06	83.74	107
**SG006	15	15	15	1.06	15.90	106
**SG007	60	119	62	1.06	65.72	110
*SG006	47	36	47	1.06	49.82	106
*SG007	49	52	49	1.06	51.94	106
***SG003	45	36	43	1.06	45.58	101
***SG002	10	12	10	1.06	10.60	106
***SG004	19	11	19	1.06	20.14	106
***SG005	50	41	47	1.06	49.82	100
***SG001	40	41	38	1.06	40.28	101
**SG005	60	98	59	1.06	62.54	104
**SG004	90	134	87	1.06	92.22	102
**SG003	20	35	19	1.06	20.14	101

Remarks: *Grilles prefixed with 6-510-. **Grilles prefixed with 6-511-. ***Grilles prefixed with 6-509-.

Instrument Used: HV12/15

Date: 17/10/14	Engineer: Stephen Murdoch & Gregor Fulton	Sheet 9 of 14

LEVEL 6

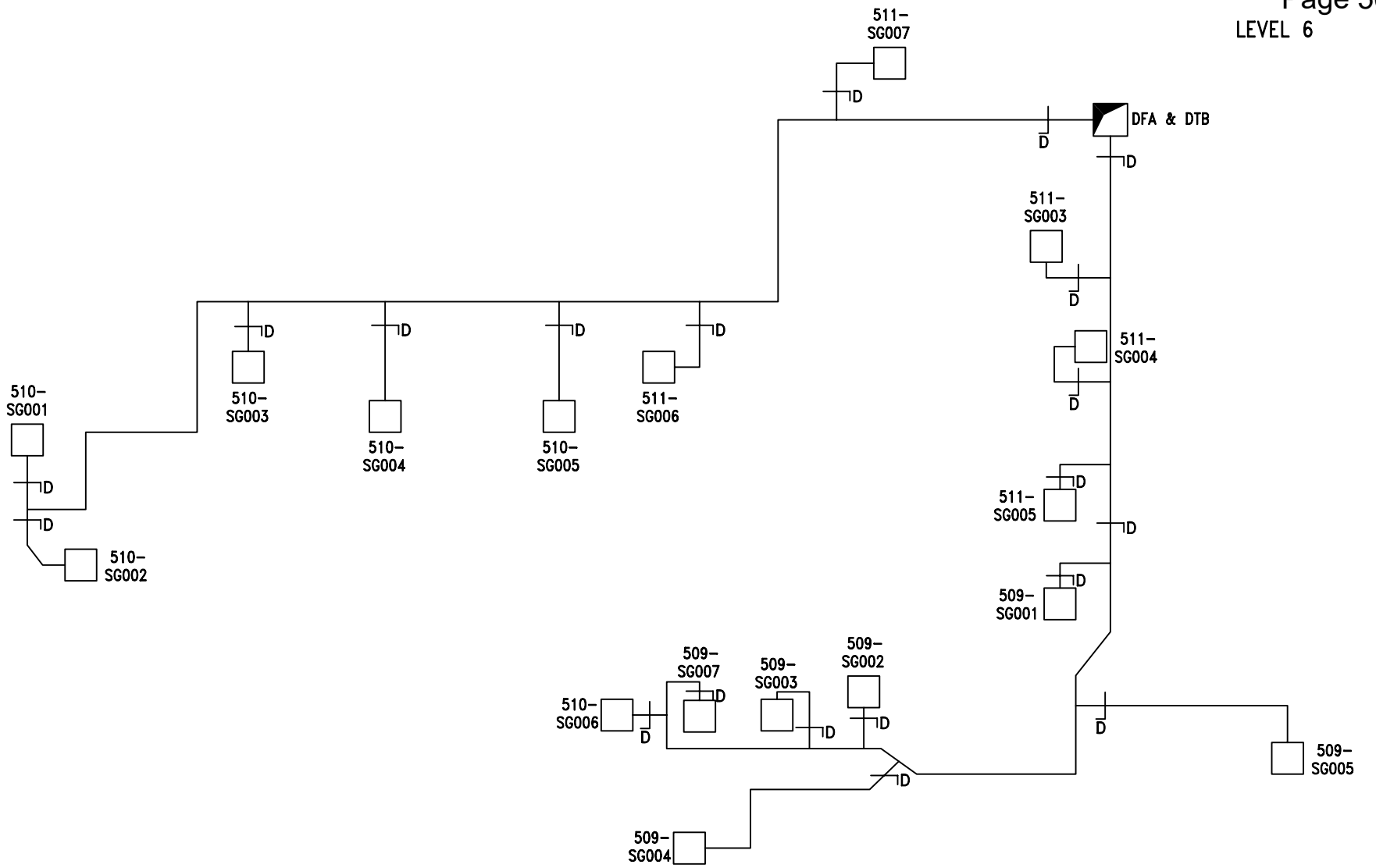

H&V Commissioning Services Limited
Kilknowe Office
16 Barrmill Road
Galston
East Ayrshire, KA4 8HH
Tel : 01563 821991
Fax: 01563 822220
email: talk2us@handv.co.uk

CONTRACT:
NSGH, ADULT & CHILDREN'S HOSPITAL - PLANTROOM 124

CLIENT:
MERCURY ENGINEERING LTD.

TITLE:
SCHEMATIC LAYOUT OF 124-AHU06 SUPPLY LEVEL 6

DRAWN: LH/DG

DATE: 16/01/15

DRG No.: 5902/V44

SHEET: 10 OF 14

H & V
H & V
H & V

Commissioning Services Ltd
EST: 1975

Kilknowe Office,
16 Barrmill Road,
Galston,
Ayrshire, KA48HH.
TEL N°. 01563 821991
FAX N°. 01563 822220
E-Mail: talk2us@handv.co.uk

CONTRACT: NSGH, ADULT & CHILDRENS HOSPITAL – PLANTROOM 124

GRILLE TEST SHEET SYSTEM: 124 – AHU 06 SUPPLY (LEVELS 4, 5, 6 & 7)

LEVEL 5

Design Data		Initial Test Data		Final Test & Regulation Data		
Terminal or Ref No	Design Air Volume l/s	Balometer Initial Air Volume l/s	Balometer Final Air Volume l/s	Balometer Factor	Balometer Final Air Volume l/s	% Design
*SG001	35	22	36	1.06	38.16	109
*SG002	35	20	33	1.06	34.98	100
*SG003	33	28	34	1.06	36.04	109
*SG004	25	17	24	1.06	25.44	102
*SG005	78	60	76	1.06	80.56	103
**SG006	15	15	15	1.06	15.90	106
**SG007	60	110	61	1.06	64.66	108
*SG006	47	36	45	1.06	47.70	101
*SG007	49	52	46	1.06	48.76	100
***SG003	45	30	44	1.06	46.64	104
***SG002	10	11	10	1.06	10.60	106
***SG004	19	13	19	1.06	20.14	106
***SG005	50	40	49	1.06	51.94	104
***SG001	40	46	39	1.06	41.34	103
**SG005	60	74	59	1.06	62.54	104
**SG004	90	134	90	1.06	95.40	106
**SG003	20	34	20	1.06	21.20	106

Remarks: *Grilles prefixed with 5-510-. **Grilles prefixed with 5-511-. ***Grilles prefixed with 5-509-.

Instrument Used: HV12/15

Date: 17/10/14	Engineer: Stephen Murdoch & Gregor Fulton	Sheet 11 of 14

LEVEL 5

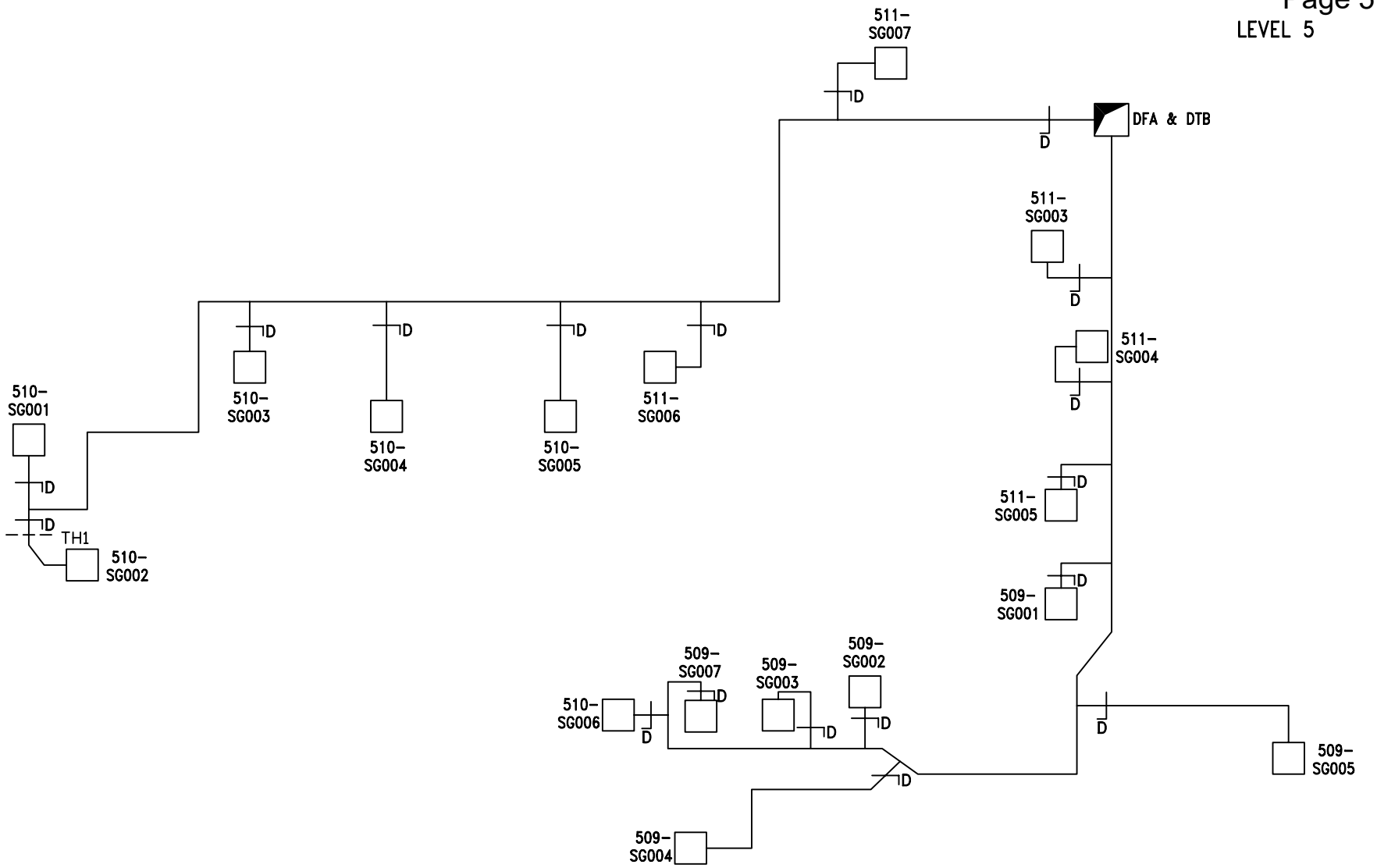

H&V Commissioning Services Limited
Kilknowe Office
16 Barrmill Road
Galston
East Ayrshire, KA4 8HH
Tel : 01563 821991
Fax: 01563 822220
email: talk2us@handv.co.uk

CONTRACT:
NSGH, ADULT & CHILDREN'S HOSPITAL - PLANTROOM 124

CLIENT:
MERCURY ENGINEERING LTD.

TITLE:
SCHEMATIC LAYOUT OF 124-AHU06 SUPPLY LEVEL 5

DRAWN: LH/DG

DATE: 16/01/15

DRG No.: 5902/V45

SHEET: 12 OF 14

H & V
H & V
H & V

Commissioning Services Ltd
EST: 1975

Kilknowe Office,
16 Barrmill Road,
Galston,
Ayrshire, KA48HH.
TEL N°. 01563 821991
FAX N°. 01563 822220
E-Mail: talk2us@handv.co.uk

CONTRACT: NSGH, ADULT & CHILDRENS HOSPITAL – PLANTROOM 124

GRILLE TEST SHEET SYSTEM: 124 – AHU 06 SUPPLY (LEVELS 4, 5, 6 & 7)

LEVEL 4

Design Data		Initial Test Data		Final Test & Regulation Data		
Terminal or Ref No	Design Air Volume l/s	Balometer Initial Air Volume l/s	Balometer Final Air Volume l/s	Balometer Factor	Balometer Final Air Volume l/s	% Design
*SG001	44	34	42	1.06	44.52	101
*SG002	25	17	24	1.06	25.44	102
*SG003	18	15	17	1.06	18.02	100
*SG004	78	69	77	1.06	81.62	105
**SG006	150	185	146	1.06	154.76	103
**SG005	150	214	141	1.06	149.46	100
**SG004	10	15	10	1.06	10.60	106
**SG002	15	24	15	1.06	15.90	106
*SG005	41	40	42	1.06	44.52	109
***SG001	49	39	49	1.06	51.94	106
***SG002	10	11	10	1.06	10.60	106
***SG003	45	46	45	1.06	47.70	106
***SG004	30	49	29	1.06	30.74	102
***SG005	40	42	41	1.06	43.46	109
***SG006	40	38	38	1.06	40.28	101
***SG007	40	39	38	1.06	40.28	101
***SG008	10	10	10	1.06	10.60	106
***SG009	24	17	23	1.06	24.38	102
***SG010	40	35	40	1.06	42.40	106
**SG003	18	20	18	1.06	19.08	106

Remarks: *Grilles prefixed with 4-510-. **Grilles prefixed with 4-511-. ***Grilles prefixed with 4-509-.

Instrument Used: HV12/15

Date: 17/10/14	Engineer: Stephen Murdoch & Gregor Fulton	Sheet 13 of 14

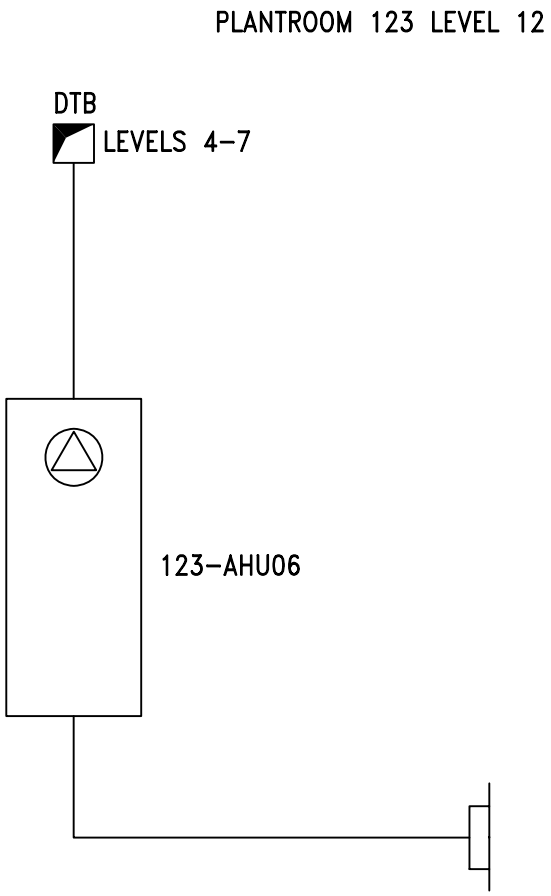

SHEET: 14 OF 14

H&V Commissioning Services Limited
Kilknowe Office
16 Barrmill Road
Galston
East Ayrshire, KA4 8HH
Tel : 01563 821991
A49618320
Fax: 01563 822220 email: talk2us@handv.co.uk

CONTRACT: NSGH, ADULT & CHILDREN'S HOSPITAL - PLANTROOM 123	**TITLE:** SCHEMATIC LAYOUT OF	**DRAWN:** LH/RP
CLIENT: MERCURY ENGINEERING UK	123-AHU 06 SUPPLY (4TH-7TH FLOOR WARDS)	**DATE:** 20/01/15
		DRG. No.: 5902/V34

H & V
H & V
H & V

Commissioning Services Ltd
EST: 1975

Kilknowe Office,
16 Barrmill Road,
Galston,
Ayrshire, KA48HH.
TEL N°. 01563 821991
FAX N°. 01563 822220
E-Mail: talk2us@handv.co.uk

CONTRACT: NSGH, ADULT & CHILDRENS HOSPITAL – PLANTROOM 124

SYSTEM: 124 – AHU 06 CLEAN EXTRACT (LEVELS 4, 5, 6 & 7)

WITNESSING OF TESTING AND BALANCING

	Client Representative / Commissioning Manager	Client
Witnessed By:	David Wilson	
Representing:	Brookfield Multiplex	
Signature:	[redacted]	
Date:	12/12/14	
Witnessed By:		
Representing:		
Signature:		
Date:		

Remarks:

H & V
H & V
H & V

Commissioning Services Ltd
EST: 1975

Kilknowe Office,
16 Barrmill Road,
Galston,
Ayrshire, KA48HH.
TEL N°. 01563 821991
FAX N°. 01563 822220
E-Mail: talk2us@handv.co.uk

CONTRACT: NSGH, ADULT & CHILDRENS HOSPITAL – PLANTROOM 124

SYSTEM: 124 – AHU 06 CLEAN EXTRACT (LEVELS 4, 5, 6 & 7)

	AIR SYSTEMS PRE COMMISSIONING SHEET	✓	X	N/A
1.	Check AHU for damage and that all the components are secure	✓		
2.	Check the transit straps have been removed, if applicable	✓		
3.	Check pulleys are secure, tight, aligned and belts are correctly tensioned, if applicable	✓		
4.	Check with the controls engineer that the system is available to run and that plant rotation is correct	✓		
5.	Check all ductwork/air terminals are fitted and that air regulating dampers are open	✓		
6.	Check louvres are fitted and clear from obstructions, if applicable	✓		
7.	Check fire dampers are open, if applicable	✓		
8.	Check the motor overloads are suitable and set			✓
9.	Check VAV or CAV boxes are installed correctly and ready for use.			✓
10.	Check the floor plenums are complete, if applicable			✓
11.	Complete commissioning test sheets.	✓		

COMMENTS

H & V
H & V
H & V

Commissioning Services Ltd

EST: 1975

Kilknowe Office,
16 Barrmill Road,
Galston,
Ayshire, KA48HH.
TEL N°. 01563 821991
FAX N°. 01563 822220
E-Mail: talk2us@handv.co.uk

CONTRACT: NSGH, ADULT & CHILDRENS HOSPITAL – PLANTROOM 124

AHU TEST SHEET

SYSTEM: 124 – AHU 06 CLEAN EXTRACT (LEVELS 4, 5, 6 & 7)

AHU											
AHU Manufacturer			Barkell		Fan Size			400			
Fan Manufacturer			Comefri		AHU Serial No			OP1 B305 0962			
Fan Type			Centrifugal		AHU Model N°.			TZAF 400 RFF			
			Design		**Test**					**% Design**	
Air Volume	(L/S)		1946		2165					110	
External Static Pressure	(Pa)		2700		Inlet	340	Outlet	39	Total	379	
Fan Rotational Speed	(R.P.M)		2700		2700						
Filter Test Data	Pre Filter	(Pa)	Inlet	*	Outlet	*			ΔP	25	
	Sec Filter	(Pa)	Inlet	N/A	Outlet	N/A			ΔP	N/A	
MOTOR											
Manufacturer			TEC		Output kW			2.2			
Serial N°			1305-0984895		Motor Full Load Current			4.91	Amps		
Voltage			400		Motor Running Current			4.42	Amps		
			Design		**Test**						
Rotational Speed.			1443		1445						
DRIVE DETAILS											
Motor Pulley/Shaft Size	(mm∅)		SPZ 118	28	Motor Pulley Taper Lock Size			1610			
Fan Pulley/Shaft Size	(mm∅)		SPZ 100	40	Fan Pulley Taper Lock Size			1610			
Belt Type/Size			XPZ	925	N°. Of Belts			4			
Shaft Centres mm			285		Adjustment			-	25	+	30 mm
Variable Speed Drive			Yes		Set Point			50Hz			
STANDBY PLANT											
Test Air Volume	2165	Inlet Pressure	340		Motor Rotational Speed	1445	Motor Running Current				
% Design	110	Outlet Pressure	39		Fan Rotational Speed	2700	4.42 Amps				
Variable Speed Drive			Yes		Set Point	50Hz					

Comments. N/A – Not Applicable.

2nd Motor Serial Number – 1305-0984912

*Filter pressure taken from magnehelic gauge.

Instrument Used (Ref N°.) HV12/1, HV12/4 & HV12/5

Date: 26/11/14	Engineer: Stephen Murdoch & Gregor Fulton	Sheet 3 of 14

H & V
H & V
H & V

Commissioning Services Ltd
EST: 1975

Kilknowe Office,
16 Barrmill Road,
Galston,
Ayshire, KA48HH.
TEL N°. 01563 821991
FAX N°. 01563 822220
E-Mail: talk2us@handv.co.uk

CONTRACT: NSGH, ADULT & CHILDRENS HOSPITAL – PLANTROOM 124

DUCT VOLUME TEST SHEET

SYSTEM: 124 – AHU 06 CLEAN EXTRACT (LEVELS 4, 5, 6 & 7)

VELOCITY PROFILE (taken facing air flow) **TEST HOLE LOCATION: PLANTROOM 124**

Test Hole Ref		Duct Dia (mm)		Duct Size (mm)		Duct Area		Design Air Volume		Design Air Velocity	
				Width x Height		M2		L/S		M/S	
Main				750	600	0.4500		1974		4.39	
4.20	5.00	5.00	4.60	4.50							
3.70	5.00	5.20	5.20	4.90							
4.30	5.10	5.40	5.30	4.60							
4.40	5.20	5.20	5.00	4.40							
Velocity Sub Totals											
16.60	20.30	20.80	20.10	18.40							

Total Velocity	Number of Readings	Average Velocity	Measured Air Volume	% Design	Static Pressure
M/S		M/S	L/S		Pa
96.2	20	4.81	2165	110	162

Remarks:

Instrument Used: HV12/1

Date: 26/11/14 | Engineer: Stephen Murdoch & Gregor Fulton | Sheet 4 of 14

H & V
H & V
H & V

Commissioning Services Ltd
EST: 1975

Kilknowe Office,
16 Barrmill Road,
Galston,
Ayshire, KA48HH.
TEL N°. 01563 821991
FAX N°. 01563 822220
E-Mail: talk2us@handv.co.uk

CONTRACT: NSGH, ADULT & CHILDRENS HOSPITAL – PLANTROOM 124

DUCT VOLUME TEST SHEET

SYSTEM: 124 – AHU 06 CLEAN EXTRACT (LEVELS 4, 5, 6 & 7)

VELOCITY PROFILE (taken facing air flow) **TEST HOLE LOCATION: CEILING VOID**

Test Hole Ref		Duct Dia (mm)		Duct Size (mm)		Duct Area		Design Air Volume		Design Air Velocity	
				Width x Height		M2		L/S		M/S	
TH1		250				0.0491		80		1.63	
1.70	1.60										
1.70	1.70										
1.50	1.60										
1.60	1.60										
Velocity Sub Totals											
6.50	6.50										

Total Velocity	Number of Readings	Average Velocity	Measured Air Volume	% Design	Static Pressure
M/S		M/S	L/S		Pa
13	8	1.63	80	100	7

Remarks: Test Hole serves 509-EG007.
Test Volume = 80 l/s ÷ Balometer Volume = 69 l/s = 1.16 Factor

Instrument Used: HV12/1

Date:26/11/14 | Engineer: Stephen Murdoch & Gregor Fulton | Sheet 5 of 14

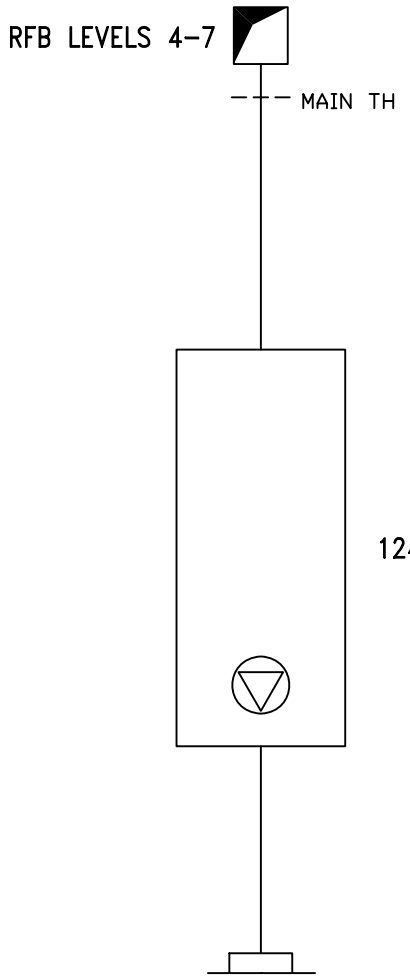

PLANTROOM 124 LEVEL 12

SHEET: 6 OF 14

H&V Commissioning Services Limited
Kilknowe Office
16 Barrmill Road
Galston
East Ayrshire, KA4 8HH
Tel : 01563 821991
A49618320
Fax: 01563 822220 email: talk2us@handv.co.uk

CONTRACT:
NSGH, ADULT & CHILDREN'S HOSPITAL - PLANTROOM 124

CLIENT:
MERCURY ENGINEERING UK

TITLE:
SCHEMATIC LAYOUT OF

124-AHU 06 EXTRACT (4TH-7TH FLOOR)

DRAWN: LH/SM

DATE: 15/12/14

DRG. No.: 5902/V36

H & V
H & V
H & V

Commissioning Services Ltd

EST: 1975

Kilknowe Office,
16 Barrmill Road,
Galston,
Ayrshire, KA48HH.
TEL N°. 01563 821991
FAX N°. 01563 822220
E-Mail: talk2us@handv.co.uk

CONTRACT: NSGH, ADULT & CHILDRENS HOSPITAL – PLANTROOM 124

GRILLE TEST SHEET

SYSTEM: 124 – AHU 06 CLEAN EXTRACT (LEVELS 4, 5, 6 & 7)

LEVEL 7

Design Data		Initial Test Data		Final Test & Regulation Data		
Terminal or Ref No	Design Air Volume l/s	Balometer Initial Air Volume l/s	Balometer Final Air Volume l/s	Balometer Factor	Balometer Final Air Volume l/s	% Design
*EG001	150	84	134	1.16	155.44	104
*EG002	65	46	61	1.16	70.76	109
**EG001	54	52	48	1.16	55.68	103
***EG004	60	70	54	1.16	62.64	104
***EG003	90	116	82	1.16	95.12	106
***EG001	10	10	9	1.16	10.44	104
***EG002	20	34	18	1.16	20.88	104

Remarks: *Grilles prefixed with 7-510-. **Grilles prefixed with 7-509-. ***Grilles prefixed with 7-511-.

Instrument Used: HV12/15

Date: 26/11/14	Engineer: Stephen Murdoch & Gregor Fulton	Sheet 7 of 14

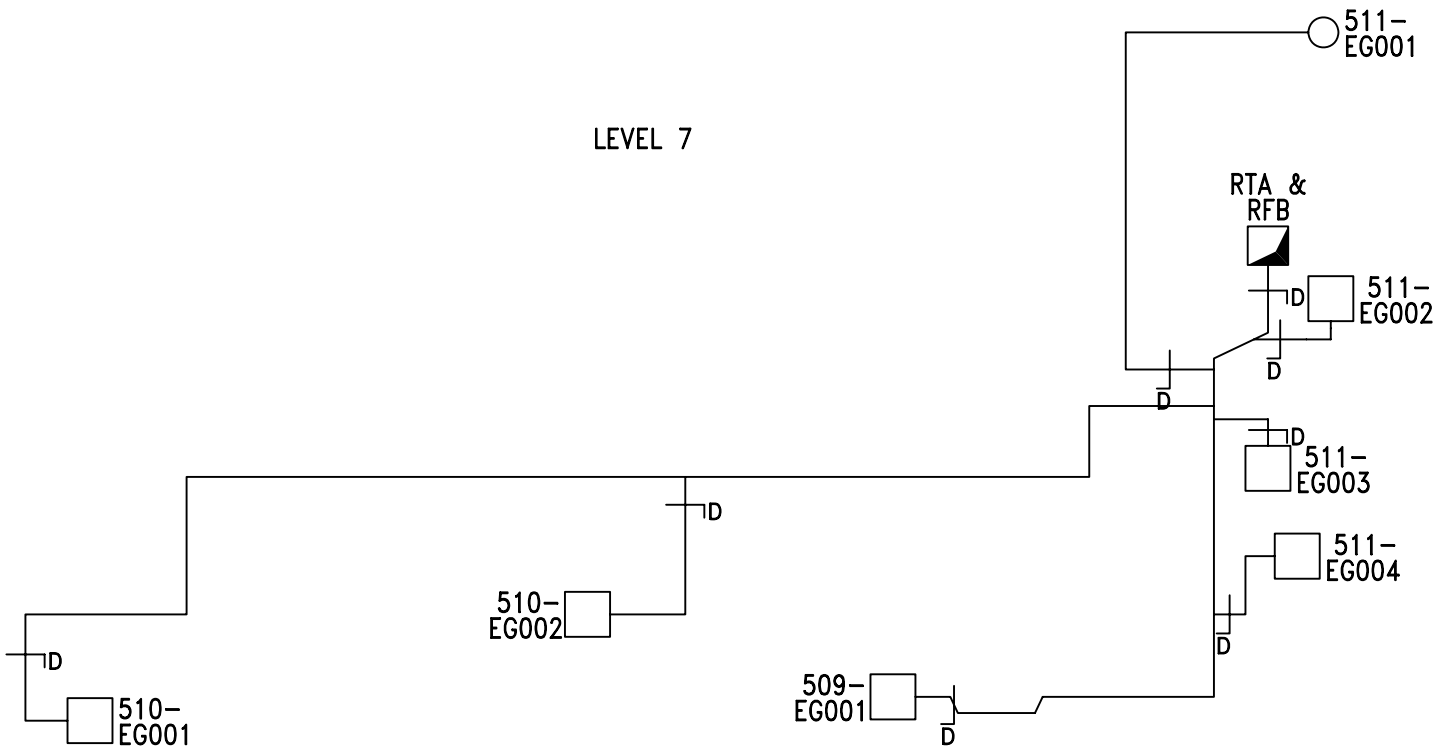

H&V Commissioning Services Limited
Kilknowe Office
16 Barrmill Road
Galston
East Ayrshire, KA4 8HH
Tel : 01563 821991
Fax: 01563 822220
email: talk2us@handv.co.uk

CONTRACT:
NSGH, ADULT & CHILDREN'S HOSPITAL - PLANTROOM 124

CLIENT:
MERCURY ENGINEERING LTD.

TITLE:
SCHEMATIC LAYOUT OF 124-AHU06 CLEAN EXTRACT LEVEL 7

DRAWN: LH/DG
DATE: 16/01/15
DRG No.: 5902/V47
SHEET: 8 OF 14

H & V
H & V
H & V

Commissioning Services Ltd
EST: 1975

Kilknowe Office,
16 Barrmill Road,
Galston,
Ayrshire, KA48HH.
TEL N°. 01563 821991
FAX N°. 01563 822220
E-Mail: talk2us@handv.co.uk

CONTRACT: NSGH, ADULT & CHILDRENS HOSPITAL – PLANTROOM 124

GRILLE TEST SHEET

SYSTEM: 124 – AHU 06 CLEAN EXTRACT (LEVELS 4, 5, 6 & 7)

LEVEL 6

Design Data		Initial Test Data		Final Test & Regulation Data		
Terminal or Ref No	Design Air Volume l/s	Balometer Initial Air Volume l/s	Balometer Final Air Volume l/s	Balometer Factor	Balometer Final Air Volume l/s	% Design
*EG001	150	71	134	1.16	155.44	104
*EG002	65	40	58	1.16	67.28	104
**EG001	54	48	48	1.16	55.68	103
***EG004	60	67	53	1.16	61.48	102
***EG003	90	123	82	1.16	95.12	106
***EG001	10	9	9	1.16	10.44	104
***EG002	20	25	18	1.16	20.88	104

Remarks: *Grilles prefixed with 6-510-. **Grilles prefixed with 6-509-. ***Grilles prefixed with 6-511-.

Instrument Used: HV12/15

Date: 26/11/14	Engineer: Stephen Murdoch & Gregor Fulton	Sheet 9 of 14

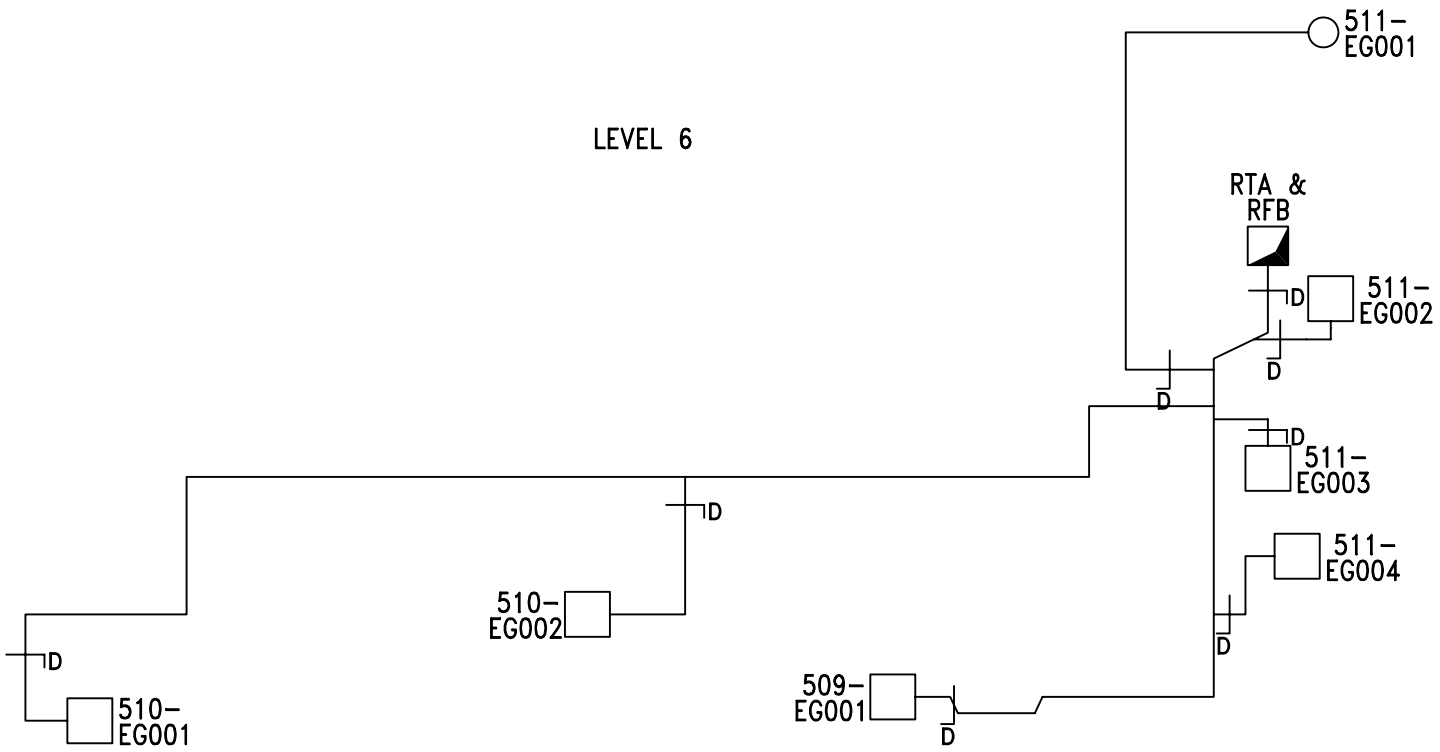

H&V Commissioning Services Limited
Kilknowe Office
16 Barrmill Road
Galston
East Ayrshire, KA4 8HH
Tel : 01563 821991
Fax: 01563 822220
email: talk2us@handv.co.uk

CONTRACT:
NSGH, ADULT & CHILDREN'S HOSPITAL - PLANTROOM 124

CLIENT:
MERCURY ENGINEERING LTD.

TITLE:
SCHEMATIC LAYOUT OF 124-AHU06 CLEAN EXTRACT LEVEL 6

DRAWN: LH/DG

DATE: 09/01/15

DRG No.: 5902/V48

SHEET: 10 OF 14

H & V
H & V
H & V

Commissioning Services Ltd
EST: 1975

Kilknowe Office,
16 Barrmill Road,
Galston,
Ayrshire, KA48HH.
TEL N°. 01563 821991
FAX N°. 01563 822220
E-Mail: talk2us@handv.co.uk

CONTRACT: NSGH, ADULT & CHILDRENS HOSPITAL – PLANTROOM 124

GRILLE TEST SHEET

SYSTEM: 124 – AHU 06 CLEAN EXTRACT (LEVELS 4, 5, 6 & 7)

LEVEL 5

Design Data		Initial Test Data		Final Test & Regulation Data		
Terminal or Ref No	Design Air Volume l/s	Balometer Initial Air Volume l/s	Balometer Final Air Volume l/s	Balometer Factor	Balometer Final Air Volume l/s	% Design
*EG001	150	80	133	1.16	154.28	103
*EG002	65	51	59	1.16	68.44	105
**EG001	54	44	50	1.16	58.00	107
***EG004	60	71	54	1.16	62.64	104
***EG003	90	114	85	1.16	98.60	110
***EG001	10	11	9	1.16	10.44	104
***EG002	20	40	18	1.16	20.88	104

Remarks: *Grilles prefixed with 5-510-. **Grilles prefixed with 5-509-. ***Grilles prefixed with 5-511-.

Instrument Used: HV12/15

Date: 26/11/14	Engineer: Stephen Murdoch & Gregor Fulton	Sheet 11 of 14

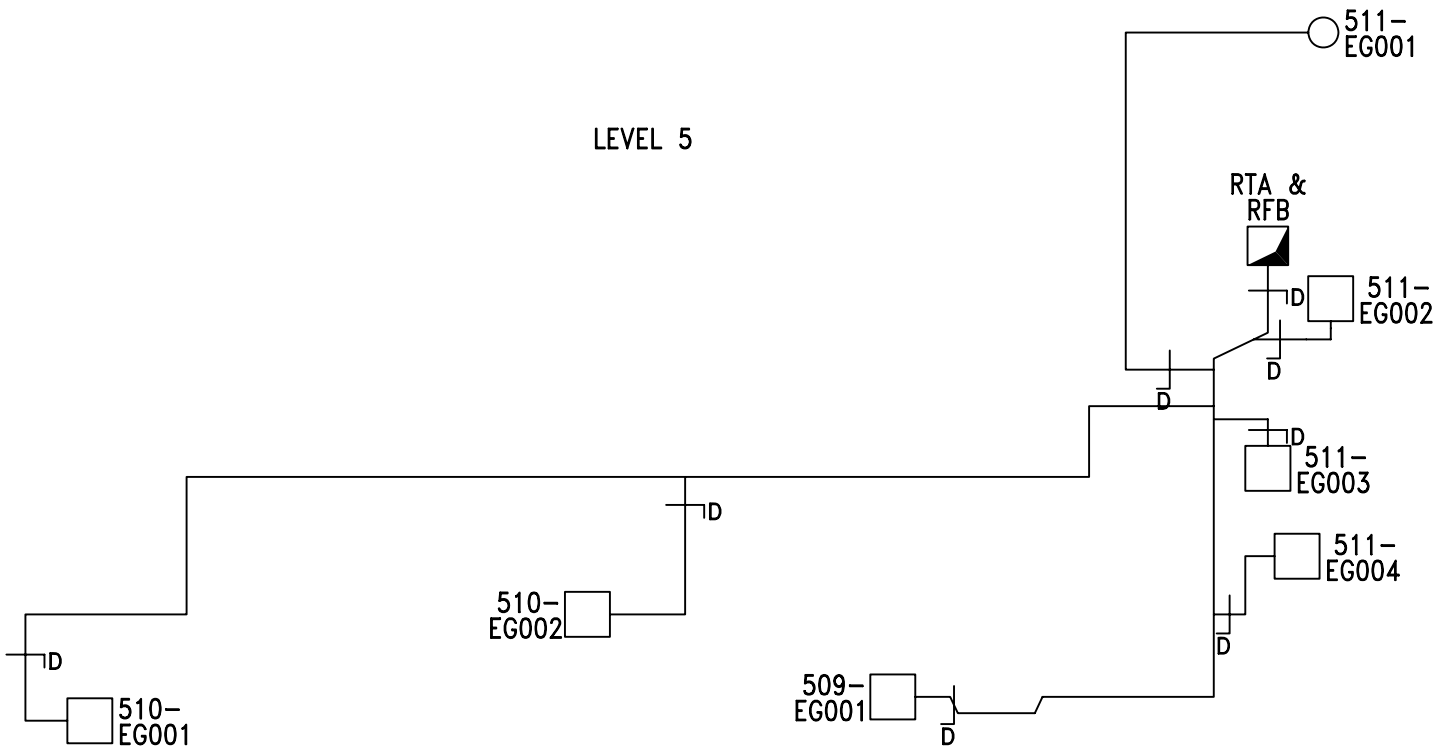

H&V Commissioning Services Limited
Kilknowe Office
16 Barrmill Road
Galston
East Ayrshire, KA4 8HH
Tel : 01563 821991
Fax: 01563 822220
email: talk2us@handv.co.uk

CONTRACT:
NSGH, ADULT & CHILDREN'S HOSPITAL - PLANTROOM 124

CLIENT:
MERCURY ENGINEERING LTD.

TITLE:
SCHEMATIC LAYOUT OF 124-AHU06 CLEAN EXTRACT LEVEL 5

DRAWN: LH/DG

DATE: 09/01/15

DRG No.: 5902/V49

SHEET: 12 OF 14

H & V
H & V
H & V

Commissioning Services Ltd

EST: 1975

Kilknowe Office,
16 Barrmill Road,
Galston,
Ayrshire, KA48HH.
TEL N°. 01563 821991
FAX N°. 01563 822220
E-Mail: talk2us@handv.co.uk

CONTRACT: NSGH, ADULT & CHILDRENS HOSPITAL – PLANTROOM 124

GRILLE TEST SHEET

SYSTEM: 124 – AHU 06 CLEAN EXTRACT (LEVELS 4, 5, 6 & 7)

LEVEL 4

Design Data		Initial Test Data		Final Test & Regulation Data		
Terminal or Ref No	Design Air Volume l/s	Balometer Initial Air Volume l/s	Balometer Final Air Volume l/s	Balometer Factor	Balometer Final Air Volume l/s	% Design
**EG007	80	24	69	1.16	80.04	100
**EG006	80	29	70	1.16	81.20	102
**EG005	40	17	35	1.16	40.60	102
**EG004	40	22	35	1.16	40.60	102
**EG003	40	26	35	1.16	40.60	102
**EG002	40	38	35	1.16	40.60	102
**EG001	54	44	47	1.16	54.52	101
*EG001	65	37	56	1.16	64.96	100
***EG002	80	125	72	1.16	83.52	104
***EG001	80	123	69	1.16	80.04	100
***EG003	28	12	25	1.16	29.00	104

Remarks: *Grilles prefixed with 5-510-. **Grilles prefixed with 5-509-. ***Grilles prefixed with 5-511-.

Instrument Used: HV12/15

Date: 26/11/14	Engineer: Stephen Murdoch & Gregor Fulton	Sheet 13 of 14

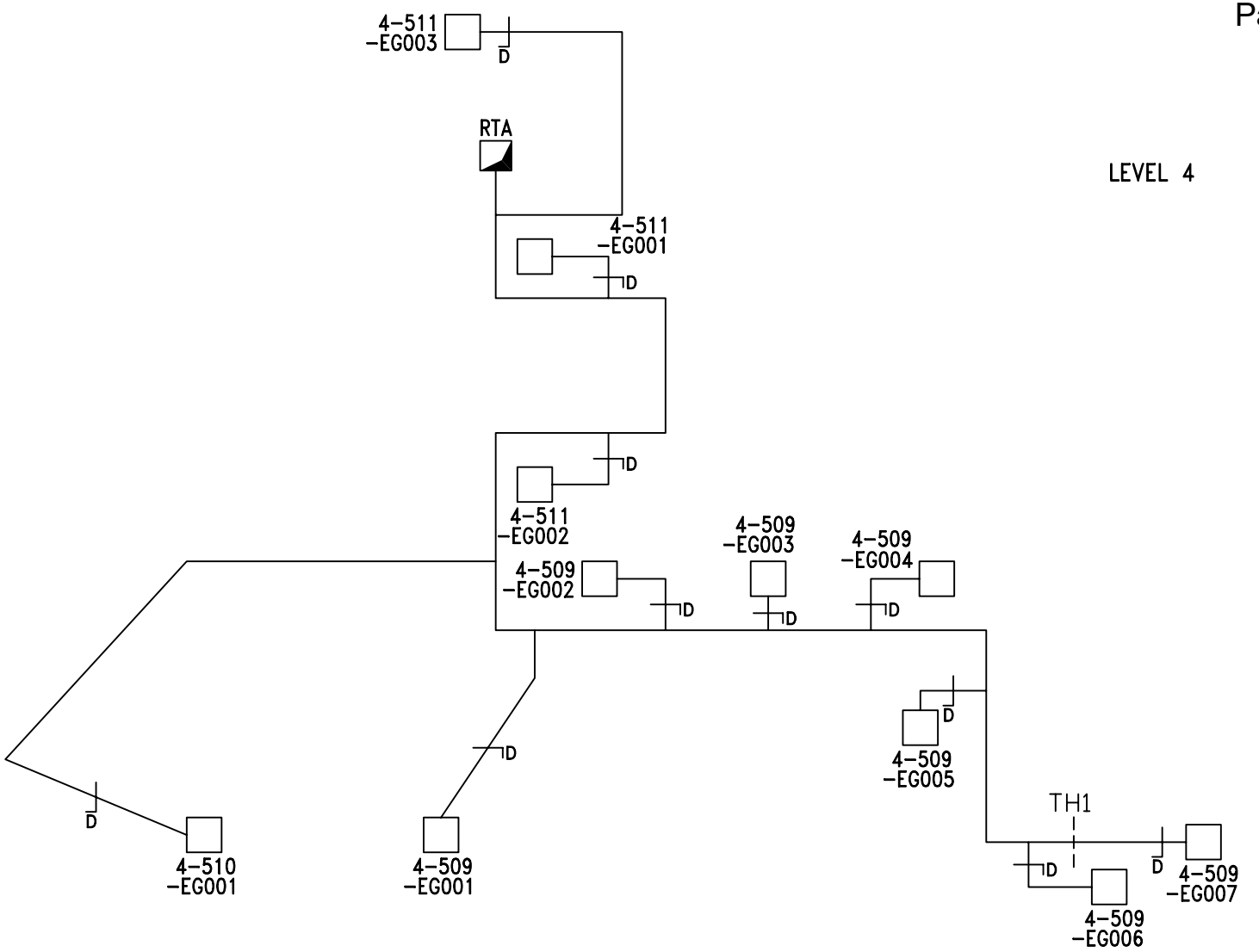

H&V Commissioning Services Limited
Kilknowe Office
16 Barrmill Road
Galston
East Ayrshire, KA4 8HH
Tel : 01563 821991
Fax: 01563 822220
email: talk2us@handv.co.uk

CONTRACT:
NSGH, ADULT & CHILDREN'S HOSPITAL - PLANTROOM 124

CLIENT:
MERCURY ENGINEERING LTD.

TITLE:
SCHEMATIC LAYOUT OF 124-AHU06 CLEAN EXTRACT LEVEL 4

DRAWN: LH/DG

DATE: 09/01/15

DRG No.: 5902/V50

SHEET: 14 OF 14

H & V
H & V
H & V

Commissioning Services Ltd
EST: 1975

Kilknowe Office,
16 Barrmill Road,
Galston,
Ayrshire, KA48HH.
TEL N°. 01563 821991
FAX N°. 01563 822220
E-Mail: talk2us@handv.co.uk

CONTRACT: NSGH, ADULT & CHILDRENS HOSPITAL – PLANTROOM 123

SYSTEM: 123 - AHU 04 SUPPLY (4TH TO 7TH FLOOR WARDS)

WITNESSING OF TESTING AND BALANCING

	Client Representative / Commissioning Manager	Client
Witnessed By:	Julie Miller	
Representing:	Brookfield Multiplex	
Signature:	[redacted]	
Date:	11/12/14	
Witnessed By:		
Representing:		
Signature:		
Date:		

Remarks:

H & V
H & V
H & V

Commissioning Services Ltd
EST: 1975

Kilknowe Office,
16 Barrmill Road,
Galston,
Ayrshire, KA48HH.
TEL N°. 01563 821991
FAX N°. 01563 822220
E-Mail: talk2us@handv.co.uk

CONTRACT: NSGH, ADULT & CHILDRENS HOSPITAL – PLANTROOM 123

SYSTEM: 123 – AHU 04 SUPPLY (4TH TO 7TH FLOOR WARDS)

	AIR SYSTEMS PRE COMMISSIONING SHEET	✓	X	N/A
1.	Check AHU for damage and that all the components are secure	✓		
2.	Check the transit straps have been removed, if applicable	✓		
3.	Check pulleys are secure, tight, aligned and belts are correctly tensioned, if applicable	✓		
4.	Check with the controls engineer that the system is available to run and that plant rotation is correct	✓		
5.	Check all ductwork/air terminals are fitted and that air regulating dampers are open	✓		
6.	Check louvres are fitted and clear from obstructions, if applicable	✓		
7.	Check fire dampers are open, if applicable	✓		
8.	Check the motor overloads are suitable and set			✓
9.	Check VAV or CAV boxes are installed correctly and ready for use.			✓
10.	Check the floor plenums are complete, if applicable			✓
11.	Complete commissioning test sheets.	✓		

COMMENTS

H & V
H & V
H & V

Commissioning Services Ltd
EST: 1975

Kilknowe Office,
16 Barrmill Road,
Galston,
Ayshire, KA48HH.
TEL N°. 01563 821991
FAX N°. 01563 822220
E-Mail: talk2us@handv.co.uk

CONTRACT: NSGH, ADULT & CHILDRENS HOSPITAL – PLANTROOM 123

AHU TEST SHEET

SYSTEM: 123 – AHU 04 SUPPLY (4TH TO 7TH FLOOR WARDS)

AHU									
AHU Manufacturer		Barkell		Fan Size		400			
Fan Manufacturer		Comefri		AHU Serial No		OP1 B305 8002			
Fan Type		Centrifugal		AHU Model N°.		TZAF 400 RFF			
		Design		**Test**				**% Design**	
Air Volume (L/S)		2400		2638				110	
External Static Pressure (Pa)		445		Inlet	76	Outlet	253	Total	329
Fan Rotational Speed (R.P.M)		2002		1601					
Filter Test Data	Pre Filter (Pa)	Inlet	N/A	Outlet	N/A			ΔP	*35
	Sec Filter (Pa)	Inlet	N/A	Outlet	N/A			ΔP	*75

MOTOR			
Manufacturer	TEC	Output kW	4.0
Serial N°	1305-0563022	Motor Full Load Current	8.14 Amps
Voltage	400	Motor Running Current	5.0 Amps
	Design	**Test**	
Rotational Speed.	1430	1142	

DRIVE DETAILS			
Motor Pulley/Shaft Size (mm∅)	SPZ 140 28	Motor Pulley Taper Lock Size	1610
Fan Pulley/Shaft Size (mm∅)	SPZ 100 40	Fan Pulley Taper Lock Size	1610
Belt Type/Size	XPZ 950	N°. Of Belts	4
Shaft Centres mm	280	Adjustment	- 25 + 35 mm
Variable Speed Drive	Yes	Set Point	40Hz

STANDBY PLANT							
Test Air Volume	2638	Inlet Pressure	76	Motor Rotational Speed	1142	Motor Running Current	
% Design	110	Outlet Pressure	253	Fan Rotational Speed	1601	5.0 Amps	
Variable Speed Drive			Yes	Set Point	40Hz		

Comments. N/A – Not Applicable

2nd Motor Serial Number – 1305-0563027

*Filter pressure taken from magnehelic gauge.

Static Pressure Sensor = 253Pa

Instrument Used (Ref N°.) HV01/1, HV01/4 & HV01/5

Date: 21/10/14	Engineer: Daniel Gilliland & Steven Hamilton	Sheet 3 of 15

H & V
H & V
H & V

Commissioning Services Ltd
EST: 1975

Kilknowe Office,
16 Barrmill Road,
Galston,
Ayshire, KA48HH.
TEL N°. 01563 821991
FAX N°. 01563 822220
E-Mail: talk2us@handv.co.uk

CONTRACT: NSGH, ADULT & CHILDRENS HOSPITAL – PLANTROOM 123

DUCT VOLUME TEST SHEET

SYSTEM: 124 – AHU 04 SUPPLY (4TH TO 7TH FLOOR WARDS)

VELOCITY PROFILE (taken facing air flow) **TEST HOLE LOCATION: LEVEL 8 RISER**

Test Hole Ref		Duct Dia (mm)		Duct Size (mm)		Duct Area		Design Air Volume		Design Air Velocity	
				Width x Height		M2		L/S		M/S	
Main TH				1100	500	0.6000		2400		4.00	
4.10	4.60	4.60	4.10	4.10	4.00						
4.40	5.00	5.00	4.60	4.50	4.20						
4.30	4.80	4.90	4.80	4.80	4.30						
3.70	4.20	4.30	4.40	4.00	3.80						
Velocity Sub Totals											
16.50	18.60	18.80	17.90	17.40	16.30						

Total Velocity	Number of Readings	Average Velocity	Measured Air Volume	% Design	Static Pressure
M/S		M/S	L/S		Pa
105.5	24	4.40	2638	110	157

Remarks:

Instrument Used: HV01/1

Date: 21/10/14 | Engineer: Daniel Gilliland & Steven Hamilton | Sheet 4 of 15

H & V
H & V
H & V

Commissioning Services Ltd
EST: 1975

Kilknowe Office,
16 Barrmill Road,
Galston,
Ayshire, KA48HH.
TEL N°. 01563 821991
FAX N°. 01563 822220
E-Mail: talk2us@handv.co.uk

CONTRACT: NSGH, ADULT & CHILDRENS HOSPITAL – PLANTROOM 123

DUCT VOLUME TEST SHEET

SYSTEM: 124 – AHU 04 SUPPLY (4TH TO 7TH FLOOR WARDS)

VELOCITY PROFILE (taken facing air flow)

Test Hole Ref		Duct Dia (mm)		Duct Size (mm)		Duct Area		Design Air Volume		Design Air Velocity	
				Width x Height		M2		L/S		M/S	
TH1		160				0.0201		40		1.99	
2.00	1.80										
2.10	2.00										
2.10	2.20										
2.00	2.00										
Velocity Sub Totals											
8.20	8.00										

Total Velocity	Number of Readings	Average Velocity	Measured Air Volume	% Design	Static Pressure
M/S		M/S	L/S		Pa
16.2	8	2.03	41	102	68

Remarks: Test Hole for Chilled Beam L1/1 Level 6

Instrument Used: HV01/1

Date: 21/10/14 | Engineer: Daniel Gilliland & Steven Hamilton | Sheet 5 of 15

H & V
H & V
H & V

Commissioning Services Ltd
EST: 1975

Kilknowe Office,
16 Barrmill Road,
Galston,
Ayshire, KA48HH.
TEL N°. 01563 821991
FAX N°. 01563 822220
E-Mail: talk2us@handv.co.uk

CONTRACT: NSGH, ADULT & CHILDRENS HOSPITAL – PLANTROOM 123

DUCT VOLUME TEST SHEET

SYSTEM: 124 – AHU 04 SUPPLY (4TH TO 7TH FLOOR WARDS)

VELOCITY PROFILE (taken facing air flow)

Test Hole Ref		Duct Dia (mm)		Duct Size (mm)		Duct Area		Design Air Volume		Design Air Velocity	
				Width x Height		M2		L/S		M/S	
TH2		160				0.0201		40		1.99	
1.90	1.90										
2.10	2.00										
2.00	2.10										
1.90	2.00										
Velocity Sub Totals											
7.90	8.00										

Total Velocity	Number of Readings	Average Velocity	Measured Air Volume	% Design	Static Pressure
M/S		M/S	L/S		Pa
15.9	8	1.99	40	100	77

Remarks: Test Hole for Chilled Beam L3/2 Level 6

Instrument Used: HV01/1

Date: 21/10/14 | Engineer: Daniel Gilliland & Steven Hamilton | Sheet 6 of 15

H & V
H & V
H & V

Commissioning Services Ltd
EST: 1975

Kilknowe Office,
16 Barrmill Road,
Galston,
Ayrshire, KA48HH.
TEL N°. 01563 821991
FAX N°. 01563 822220
E-Mail: talk2us@handv.co.uk

CONTRACT: NSGH, ADULT & CHILDRENS HOSPITAL – PLANTROOM 123

CHILLED BEAM BALANCE SHEET

SYSTEM: 123 – AHU 04 SUPPLY (4TH TO 7TH FLOOR WARDS)

LEVEL 7

Chilled Beam Data			Design Data		Test Data			
No.	Size (mm)	Setting	Volume (l/s)	Pressure (Pa)	Initial Pressure (Pa)	Final Pressure (Pa)	Final Volume (l/s)	% Design
CB/W1/L1/1	N/A	N/A	40	51.8	40	51.5	39.90	100
CB/W1/L1/2	N/A	N/A	40	51.8	42	51.5	39.90	100
CB/W1/L1/3	N/A	N/A	40	51.8	64	53.0	40.50	101
CB/W1/L1/4	N/A	N/A	40	51.8	64	52.0	40.08	100
CB/W1/L1/5	N/A	N/A	40	51.8	65	52.0	40.08	100
CB/W1/L1/6	N/A	N/A	40	51.8	67	52.0	40.08	100
CB/W1/L1/7	N/A	N/A	40	51.8	67	51.5	39.90	100
CB/W1/L1/8	N/A	N/A	40	51.8	69	52.0	40.08	100
CB/W1/L1/9	N/A	N/A	40	51.8	71	53.0	40.50	101
CB/W1/L1/10	N/A	N/A	40	51.8	73	53.0	40.50	101
CB/W1/L3/1	N/A	N/A	40	63.0	74	64.0	40.30	101
CB/W1/L3/2	N/A	N/A	40	63.0	73	63.0	40.00	100
CB/W1/L1/11	N/A	N/A	40	51.8	67	52.0	40.08	100
CB/W1/L1/12	N/A	N/A	40	51.8	66	52.0	40.08	100
CB/W1/L1/13	N/A	N/A	40	51.8	68	53.0	40.50	101
CB/W1/L1/14	N/A	N/A	40	51.8	68	53.0	40.50	101

REMARKS

INSTRUMENT USED: HV01/1

Date:	21/10/14	Engineer:	Daniel Gilliland & Steven Hamilton	Sheet 7 of 15

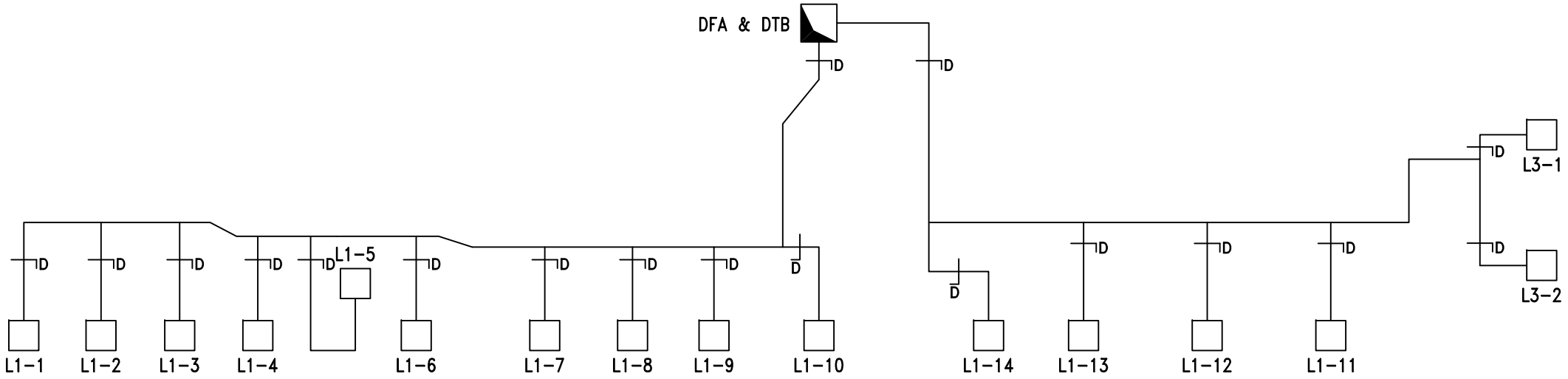

LEVEL 7

SHEET: 8 OF 15

H&V Commissioning Services Limited **Kilknowe Office** **16 Barrmill Road** **Galston** **East Ayrshire, KA4 8HH** **Tel : 01563 821991** **Fax: 01563 822220 email: talk2us@handv.co.uk**	**CONTRACT:** **NSGH, ADULT & CHILDREN'S HOSPITAL - PLANTROOM 123** **CLIENT:** **MERCURY ENGINEERING UK**	**TITLE:** **SCHEMATIC LAYOUT OF** **123-AHU 04 SUPPLY (4TH-7TH FLOOR WARDS)**	**DRAWN:** LH/DG **DATE:** 24/11/14 **DRG. No.:** 5902/V06

A49618320

H & V
H & V
H & V

Commissioning Services Ltd
EST: 1975

Kilknowe Office,
16 Barrmill Road,
Galston,
Ayrshire, KA48HH.
TEL N°. 01563 821991
FAX N°. 01563 822220
E-Mail: talk2us@handv.co.uk

CONTRACT: NSGH, ADULT & CHILDRENS HOSPITAL – PLANTROOM 123

CHILLED BEAM BALANCE SHEET

SYSTEM: 123 – AHU 04 SUPPLY (4TH TO 7TH FLOOR WARDS)

LEVEL 6

Chilled Beam Data			Design Data		Test Data			
No.	Size (mm)	Setting	Volume (l/s)	Pressure (Pa)	Initial Pressure (Pa)	Final Pressure (Pa)	Final Volume (l/s)	% Design
CB/W1/L1/1	N/A	N/A	40	51.8	47	51.5	39.90	100
CB/W1/L1/2	N/A	N/A	40	51.8	49	52.0	40.08	100
CB/W1/L1/3	N/A	N/A	40	51.8	54	52.0	40.08	100
CB/W1/L1/4	N/A	N/A	40	51.8	56	51.5	39.90	100
CB/W1/L1/5	N/A	N/A	40	51.8	56	53.0	40.50	101
CB/W1/L1/6	N/A	N/A	40	51.8	56	51.5	39.90	100
CB/W1/L1/7	N/A	N/A	40	51.8	57	52.0	40.08	100
CB/W1/L1/8	N/A	N/A	40	51.8	58	52.0	40.08	100
CB/W1/L1/9	N/A	N/A	40	51.8	59	53.0	40.50	101
CB/W1/L1/10	N/A	N/A	40	51.8	60	52.0	40.08	100
CB/W1/L3/1	N/A	N/A	40	63.0	72	62.5	39.80	100
CB/W1/L3/2	N/A	N/A	40	63.0	73	63.0	40.00	100
CB/W1/L1/11	N/A	N/A	40	51.8	77	52.0	40.08	100
CB/W1/L1/12	N/A	N/A	40	51.8	79	52.0	40.08	100
CB/W1/L1/13	N/A	N/A	40	51.8	81	53.0	40.50	101
CB/W1/L1/14	N/A	N/A	40	51.8	82	52.0	40.08	100

REMARKS

INSTRUMENT USED: HV01/1

Date:	21/10/14	Engineer:	Daniel Gilliland & Steven Hamilton	Sheet 9 of 15

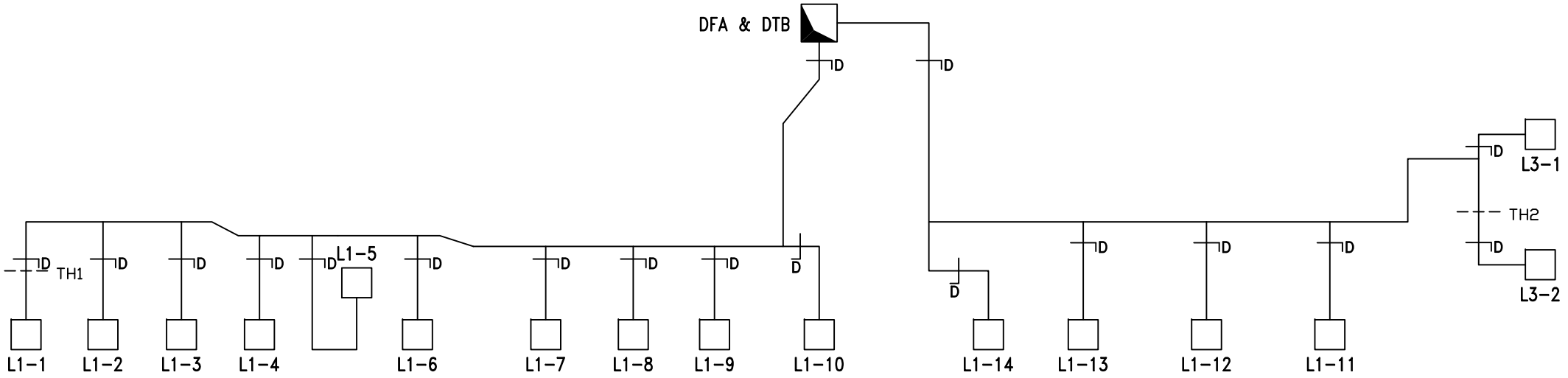

LEVEL 6

SHEET: 10 OF 15

H&V Commissioning Services Limited **Kilknowe Office** **16 Barrmill Road** **Galston** **East Ayrshire, KA4 8HH** **Tel : 01563 821991** **Fax: 01563 822220 email: talk2us@handv.co.uk**	**CONTRACT:** **NSGH, ADULT & CHILDREN'S HOSPITAL - PLANTROOM 123** **CLIENT:** **MERCURY ENGINEERING UK**	**TITLE:** **SCHEMATIC LAYOUT OF** **123-AHU 04 SUPPLY (4TH-7TH FLOOR WARDS)**	**DRAWN:** LH/DG **DATE:** 24/11/14 **DRG. No.:** 5902/V07

A49618320

H & V
H & V
H & V

Commissioning Services Ltd
EST: 1975

Kilknowe Office,
16 Barrmill Road,
Galston,
Ayrshire, KA48HH.
TEL N°. 01563 821991
FAX N°. 01563 822220
E-Mail: talk2us@handv.co.uk

CONTRACT: NSGH, ADULT & CHILDRENS HOSPITAL – PLANTROOM 123

CHILLED BEAM BALANCE SHEET

SYSTEM: 123 – AHU 04 SUPPLY (4TH TO 7TH FLOOR WARDS)

LEVEL 5

Chilled Beam Data			Design Data		Test Data			
No.	Size (mm)	Setting	Volume (l/s)	Pressure (Pa)	Initial Pressure (Pa)	Final Pressure (Pa)	Final Volume (l/s)	% Design
CB/W1/L1/1	N/A	N/A	40	51.8	42	51.5	39.90	100
CB/W1/L1/2	N/A	N/A	40	51.8	45	51.5	39.90	100
CB/W1/L1/3	N/A	N/A	40	51.8	46	52.0	40.08	100
CB/W1/L1/4	N/A	N/A	40	51.8	44	52.0	40.08	100
CB/W1/L1/5	N/A	N/A	40	51.8	52	52.0	40.08	100
CB/W1/L1/6	N/A	N/A	40	51.8	58	52.0	40.08	100
CB/W1/L1/7	N/A	N/A	40	51.8	58	53.0	40.50	101
CB/W1/L1/8	N/A	N/A	40	51.8	69	53.0	40.50	101
CB/W1/L1/9	N/A	N/A	40	51.8	69	53.0	40.50	101
CB/W1/L1/10	N/A	N/A	40	51.8	73	53.0	40.50	101
CB/W1/L3/1	N/A	N/A	40	63.0	74	63.0	40.00	100
CB/W1/L3/2	N/A	N/A	40	63.0	76	64.0	40.30	101
CB/W1/L1/11	N/A	N/A	40	51.8	78	52.0	40.08	100
CB/W1/L1/12	N/A	N/A	40	51.8	83	52.0	40.08	100
CB/W1/L1/13	N/A	N/A	40	51.8	80	52.0	40.08	100
CB/W1/L1/14	N/A	N/A	40	51.8	87	52.0	40.08	100

REMARKS

INSTRUMENT USED: HV01/1

Date:	21/10/14	Engineer:	Daniel Gilliland & Steven Hamilton	Sheet 11 of 15

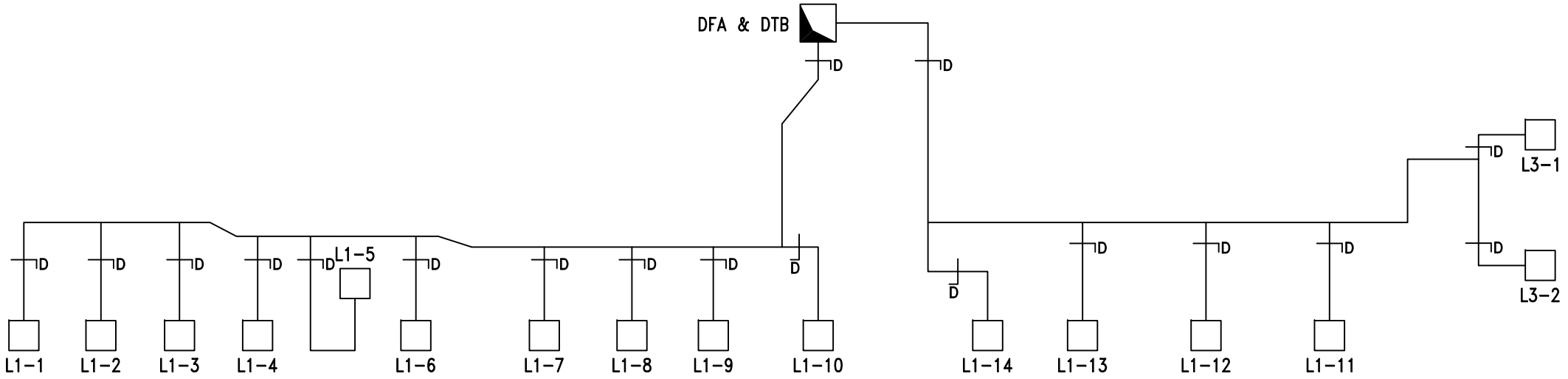

LEVEL 5

SHEET: 12 OF 15

H&V Commissioning Services Limited **Kilknowe Office** **16 Barrmill Road** **Galston** **East Ayrshire, KA4 8HH** **Tel : 01563 821991** **Fax: 01563 822220 email: talk2us@handv.co.uk**	**CONTRACT:** **NSGH, ADULT & CHILDREN'S HOSPITAL - PLANTROOM 123** **CLIENT:** **MERCURY ENGINEERING UK**	**TITLE:** **SCHEMATIC LAYOUT OF** **123-AHU 04 SUPPLY (4TH-7TH FLOOR WARDS)**	**DRAWN:** LH/DG **DATE:** 24/11/14 **DRG. No.:** 5902/V08

A49618320

H & V
H & V
H & V

Commissioning Services Ltd
EST: 1975

Kilknowe Office,
16 Barrmill Road,
Galston,
Ayrshire, KA48HH.
TEL N°. 01563 821991
FAX N°. 01563 822220
E-Mail: talk2us@handv.co.uk

CONTRACT: NSGH, ADULT & CHILDRENS HOSPITAL – PLANTROOM 123

CHILLED BEAM BALANCE SHEET

SYSTEM: 123 – AHU 04 SUPPLY (4TH TO 7TH FLOOR WARDS)

LEVEL 4

Chilled Beam Data			Design Data		Test Data			
No.	Size (mm)	Setting	Volume (l/s)	Pressure (Pa)	Initial Pressure (Pa)	Final Pressure (Pa)	Final Volume (l/s)	% Design
CB/W1/L2/1	N/A	N/A	40	63	56	62.5	39.8	100
CB/W1/L2/2	N/A	N/A	40	63	56	63.0	40.0	100
CB/W1/L2/3	N/A	N/A	40	63	59	64.0	40.3	101
CB/W1/L2/4	N/A	N/A	40	63	60	64.0	40.3	101
CB/W1/L2/5	N/A	N/A	40	63	57	63.0	40.0	100
CB/W1/L2/6	N/A	N/A	40	63	64	65.0	40.6	102
CB/W1/L2/7	N/A	N/A	40	63	90	64.0	40.3	101
CB/W1/L2/8	N/A	N/A	40	63	74	64.0	40.3	101
CB/W1/L2/9	N/A	N/A	40	63	74	64.0	40.3	101
CB/W1/L2/10	N/A	N/A	40	63	81	63.0	40.0	100
CB/W1/L2/11	N/A	N/A	40	63	84	64.0	40.3	101
CB/W1/L2/12	N/A	N/A	40	63	86	63.0	40.0	100

REMARKS

INSTRUMENT USED: HV01/1

Date:	21/10/14	Engineer:	Daniel Gilliland & Steven Hamilton	Sheet 13 of 15

ALL CHILLED BEAMS PRE-FIXED CB/W1/

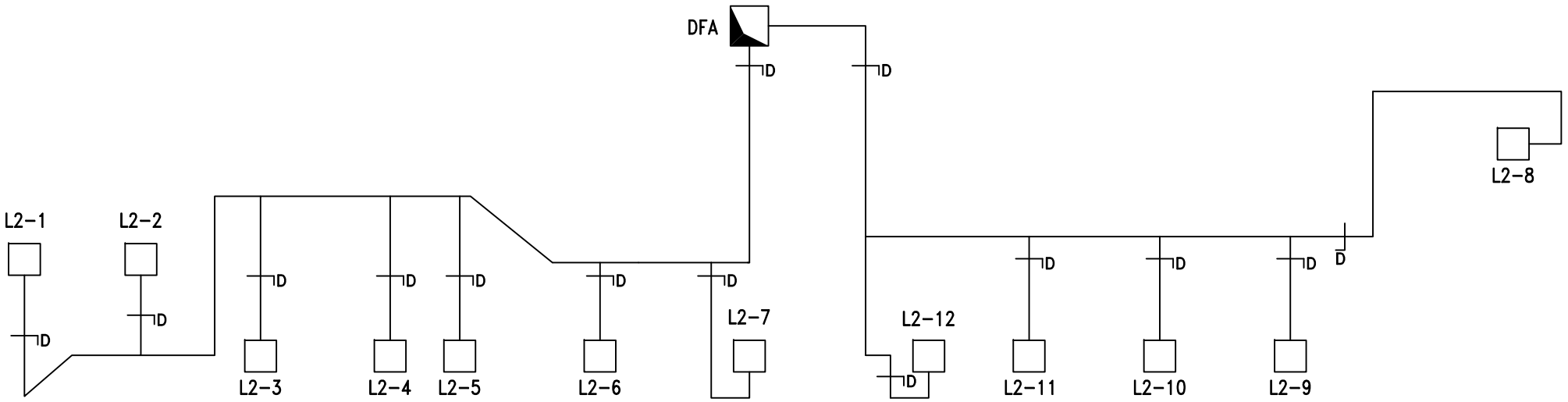

LEVEL 4

SHEET: 14 OF 15

H&V Commissioning Services Limited **Kilknowe Office** **16 Barrmill Road** **Galston** **East Ayrshire, KA4 8HH** **Tel : 01563 821991** **Fax: 01563 822220 email: talk2us@handv.co.uk**	**CONTRACT:** **NSGH, ADULT & CHILDREN'S HOSPITAL - PLANTROOM 123** **CLIENT:** **MERCURY ENGINEERING UK**	**TITLE:** **SCHEMATIC LAYOUT OF** **123-AHU 04 SUPPLY (4TH-7TH FLOOR WARDS)**	**DRAWN:** LH/DG **DATE:** 22/01/2015 **DRG. No.:** 5902/V09

A49618320

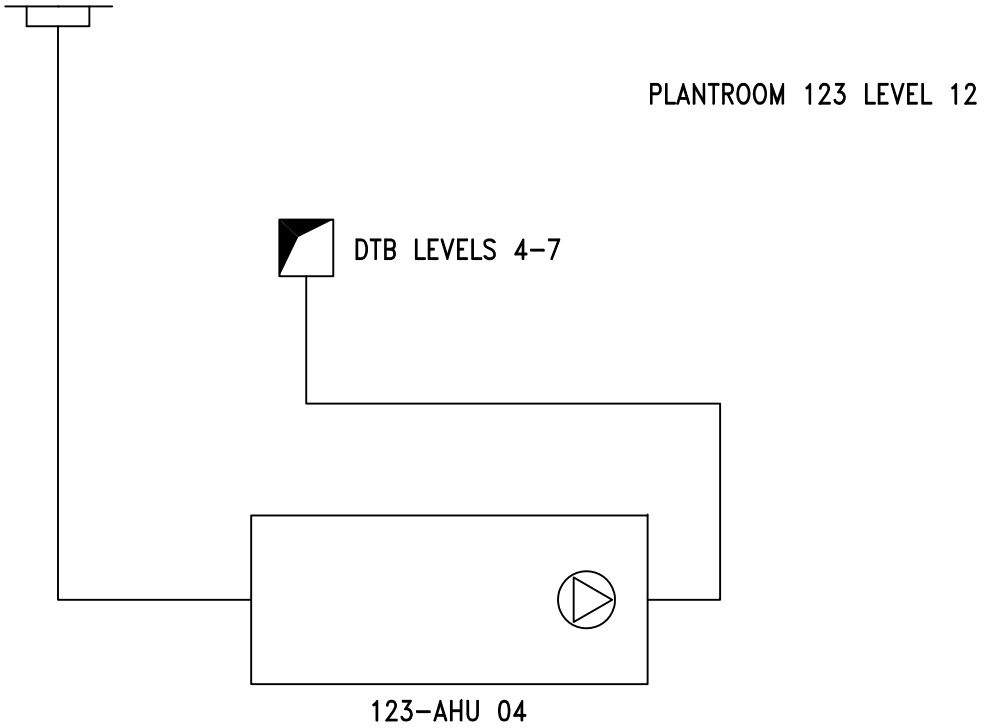

SHEET: 15 OF 15

H&V Commissioning Services Limited
Kilknowe Office
16 Barrmill Road
Galston
East Ayrshire, KA4 8HH
Tel : 01563 821991
A495618320
Fax: 01563 822220 email: talk2us@handv.co.uk

CONTRACT:
NSGH, ADULT & CHILDREN'S HOSPITAL - PLANTROOM 123

CLIENT:
MERCURY ENGINEERING UK

TITLE:
SCHEMATIC LAYOUT OF

123-AHU 04 SUPPLY (4TH-7TH FLOOR WARDS)

DRAWN: LH/DG

DATE: 24/11/14

DRG. No.: 5902/V10

H & V
H & V
H & V

Commissioning Services Ltd
EST: 1975

Kilknowe Office,
16 Barrmill Road,
Galston,
Ayrshire, KA48HH.
TEL N°. 01563 821991
FAX N°. 01563 822220
E-Mail: talk2us@handv.co.uk

CONTRACT: NSGH, ADULT & CHILDRENS HOSPITAL – PLANTROOM 123

SYSTEM: 123 - AHU 04 DIRTY EXTRACT (4TH TO 7TH FLOOR WARDS)

WITNESSING OF TESTING AND BALANCING

	Client Representative / Commissioning Manager	Client
Witnessed By:	Julie Miller	
Representing:	Brookfield Multiplex	
	Awaiting Signature	
Date:	11/12/14	
Witnessed By:		
Representing:		
Signature:		
Date:		

Remarks:

	AIR SYSTEMS PRE COMMISSIONING SHEET	✓	X	N/A
1.	Check AHU for damage and that all the components are secure	✓		
2.	Check the transit straps have been removed, if applicable	✓		
3.	Check pulleys are secure, tight, aligned and belts are correctly tensioned, if applicable	✓		
4.	Check with the controls engineer that the system is available to run and that plant rotation is correct	✓		
5.	Check all ductwork/air terminals are fitted and that air regulating dampers are open	✓		
6.	Check louvres are fitted and clear from obstructions, if applicable	✓		
7.	Check fire dampers are open, if applicable	✓		
8.	Check the motor overloads are suitable and set			✓
9.	Check VAV or CAV boxes are installed correctly and ready for use.			✓
10.	Check the floor plenums are complete, if applicable			✓
11.	Complete commissioning test sheets.	✓		

COMMENTS

AHU											
AHU Manufacturer			Barkell		Fan Size			450			
Fan Manufacturer			Comefri		AHU Serial No			OP1 B305 8003			
Fan Type			Centrifugal		AHU Model Nº.			TZAF 450 RFF			
			Design		**Test**					**% Design**	
Air Volume (L/S)			2626		2837					108	
External Static Pressure (Pa)			400		Inlet	285	Outlet	50	Total	335	
Fan Rotational Speed (R.P.M)			1609		1450						
Filter Test Data	Pre Filter (Pa)	Inlet	N/A		Outlet	N/A			ΔP	*45	
	Sec Filter (Pa)	Inlet	N/A		Outlet	N/A			ΔP	*N/A	
MOTOR											
Manufacturer			TEC		Output kW			4.0			
Serial Nº			1305-0563024		Motor Full Load Current			8.14	Amps		
Voltage			400		Motor Running Current			5.7	Amps		
			Design		**Test**						
Rotational Speed.			1430		1285						
DRIVE DETAILS											
Motor Pulley/Shaft Size (mm∅)		SPZ 180	28		Motor Pulley Taper Lock Size			2012			
Fan Pulley/Shaft Size (mm∅)		SPZ 160	50		Fan Pulley Taper Lock Size			2517			
Belt Type/Size		XPZ	1150		Nº. Of Belts			4			
Shaft Centres mm		300			Adjustment			-	30	+	25 mm
Variable Speed Drive		Yes			Set Point			45Hz			
STANDBY PLANT											
Test Air Volume	2837	Inlet Pressure	285		Motor Rotational Speed	1285		Motor Running Current			
% Design	108	Outlet Pressure	50		Fan Rotational Speed	1450		5.7 Amps			
Variable Speed Drive			Yes		Set Point	45Hz					

Comments. N/A – Not Applicable

2nd Motor Serial Number – 1305-0563023

*Filter pressure taken from magnehelic gauge.

Instrument Used (Ref Nº.) HV01/1, HV01/4 & HV01/5

Date: 23/10/14	Engineer: Daniel Gilliland & Steven Hamilton	Sheet 3 of 14

VELOCITY PROFILE (taken facing air flow)

Test Hole Ref		Duct Dia (mm)		Duct Size (mm)		Duct Area		Design Air Volume		Design Air Velocity	
				Width x Height		M2		L/S		M/S	
Main				1000	600	0.6000		2626		4.38	
4.90	5.00	4.60	4.50	4.70	4.50						
5.30	5.40	4.90	4.10	4.20	4.20						
5.50	5.50	5.20	4.70	4.00	3.90						

Velocity Sub Totals

15.70	15.90	14.70	13.30	12.90	12.60						

Total Velocity	Number of Readings	Average Velocity	Measured Air Volume	% Design	Static Pressure
M/S		M/S	L/S		Pa
85.1	18	4.73	2837	108	206

Remarks:

Instrument Used: HV01/1

Date: 23/10/14 | Engineer: Daniel Gilliland & Steven Hamilton | Sheet 4 of 14

VELOCITY PROFILE (taken facing air flow)

Test Hole Ref		Duct Dia (mm)		Duct Size (mm)		Duct Area		Design Air Volume		Design Air Velocity	
				Width x Height		M2		L/S		M/S	
TH2		160				0.0201		45		2.24	
2.60	2.40										
2.50	2.60										
2.40	2.50										
2.30	2.30										
Velocity Sub Totals											
9.80	9.80										

Total Velocity	Number of Readings	Average Velocity	Measured Air Volume	% Design	Static Pressure
M/S		M/S	L/S		Pa
19.6	8	2.45	49	109	70

Remarks: Test Hole for Grille to obtain Balometer Factor. Test Volume 49 l/s ÷ Balometer Volume 42 l/s = 1.17 Factor

Instrument Used: HV01/1

Date: 23/10/14	Engineer: Daniel Gilliland & Steven Hamilton	Sheet 5 of 14

Design Data		Initial Test Data		Final Test & Regulation Data		
Terminal or Ref No	Design Air Volume l/s	Balometer Initial Air Volume l/s	Balometer Final Air Volume l/s	Balometer Factor	Balometer Final Air Volume l/s	% Design
LEVEL 7						
508-TG001	45	28	40	1.17	46.80	104
508-TG002	45	32	41	1.17	47.97	107
507-TG004	45	28	42	1.17	49.14	109
508-TG003	45	34	40	1.17	46.80	104
508-TG006	45	43	42	1.17	49.14	109
508-TG005	45	37	42	1.17	49.14	109
508-TG007	45	38	42	1.17	49.14	109
507-TG012	45	38	42	1.17	49.14	109
507-TG014	45	37	41	1.17	47.97	107
507-TG013	45	40	42	1.17	49.14	109
507-TG015	45	40	41	1.17	47.97	107
507-TG016	45	41	42	1.17	49.14	109
507-TG018	45	44	42	1.17	49.14	109
507-TG017	45	57	42	1.17	49.14	109
507-TG009	22	26	20	1.17	23.40	106

Remarks:

Instrument Used: HV01/15

Date: 23/10/14	Engineer: Daniel Gilliland & Steven Hamilton	Sheet 6 of 14

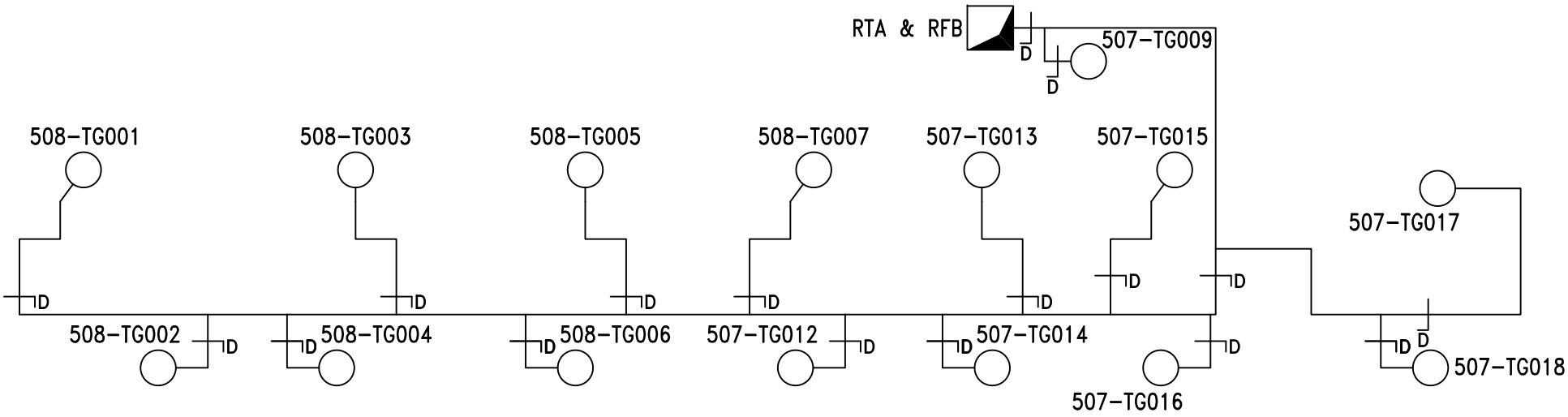

LEVEL 7

SHEET: 7 OF 14

H&V Commissioning Services Limited
Kilknowe Office
16 Barrmill Road
Galston
East Ayrshire, KA4 8HH
Tel : 01563 821991
A49618320
Fax: 01563 822220 email: talk2us@handv.co.uk

CONTRACT:
NSGH, ADULT & CHILDREN'S HOSPITAL - PLANTROOM 123

CLIENT:
MERCURY ENGINEERING UK

TITLE:
SCHEMATIC LAYOUT OF

123-AHU 04 DIRTY EXTRACT (4TH-7TH FLOOR WARDS)

DRAWN: LH/DG

DATE: 24/11/14

DRG. No.: 5902/V01

Design Data		Initial Test Data		Final Test & Regulation Data		
Terminal or Ref No	Design Air Volume l/s	Balometer Initial Air Volume l/s	Balometer Final Air Volume l/s	Balometer Factor	Balometer Final Air Volume l/s	% Design
LEVEL 6						
508-TG001	45	29	40	1.17	46.80	104
508-TG002	45	29	42	1.17	49.14	109
508-TG004	45	32	41	1.17	47.97	107
508-TG003	45	31	40	1.17	46.80	104
508-TG006	45	36	41	1.17	47.97	107
508-TG005	45	39	40	1.17	46.80	104
508-TG007	45	40	41	1.17	47.97	107
507-TG012	45	45	41	1.17	47.97	107
507-TG014	45	42	42	1.17	49.14	109
507-TG013	45	47	42	1.17	49.14	109
507-TG015	45	44	42	1.17	49.14	109
507-TG016	45	61	42	1.17	49.14	109
507-TG018	45	53	41	1.17	47.97	107
507-TG017	45	43	42	1.17	49.14	109
507-TG009	22	23	20	1.17	23.40	106

Remarks:

Instrument Used: HV01/15

Date: 23/10/14	Engineer: Daniel Gilliland & Steven Hamilton	Sheet 8 of 14

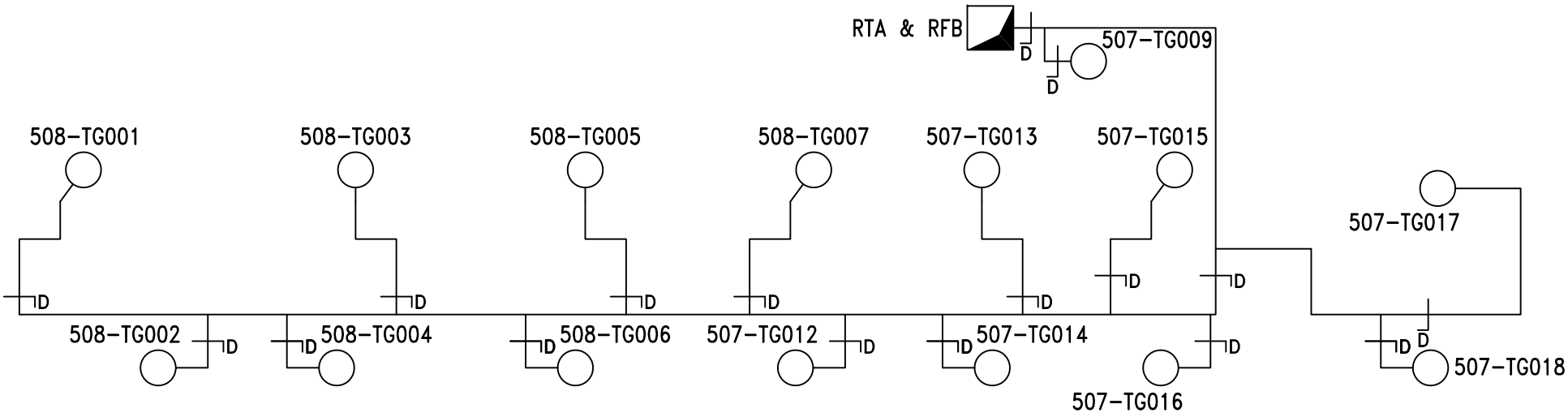

LEVEL 6

SHEET: 9 OF 14

H&V Commissioning Services Limited
Kilknowe Office
16 Barrmill Road
Galston
East Ayrshire, KA4 8HH
Tel : 01563 821991
A49618320
Fax: 01563 822220 email: talk2us@handv.co.uk

CONTRACT:
NSGH, ADULT & CHILDREN'S HOSPITAL - PLANTROOM 123

CLIENT:
MERCURY ENGINEERING UK

TITLE:
SCHEMATIC LAYOUT OF

123-AHU 04 DIRTY EXTRACT (4TH-7TH FLOOR WARDS)

DRAWN: LH/DG

DATE: 24/11/14

DRG. No.: 5902/V02

Design Data		Initial Test Data		Final Test & Regulation Data		
Terminal or Ref No	Design Air Volume l/s	Balometer Initial Air Volume l/s	Balometer Final Air Volume l/s	Balometer Factor	Balometer Final Air Volume l/s	% Design
LEVEL 5						
508-TG001	45	26	39	1.17	45.63	101
508-TG002	45	28	40	1.17	46.80	104
508-TG004	45	28	40	1.17	46.80	104
508-TG003	45	35	40	1.17	46.80	104
508-TG006	45	40	40	1.17	46.80	104
508-TG005	45	40	40	1.17	46.80	104
508-TG007	45	39	40	1.17	46.80	104
507-TG012	45	41	40	1.17	46.80	104
507-TG014	45	40	40	1.17	46.80	104
507-TG013	45	43	41	1.17	47.97	107
507-TG015	45	46	39	1.17	45.63	101
507-TG016	45	48	39	1.17	45.63	101
507-TG018	45	49	39	1.17	45.63	101
507-TG017	45	47	39	1.17	45.63	101
507-TG009	22	34	20	1.17	23.40	106

Remarks:

Instrument Used: HV01/15

Date: 23/10/14	Engineer: Daniel Gilliland & Steven Hamilton	Sheet 10 of 14

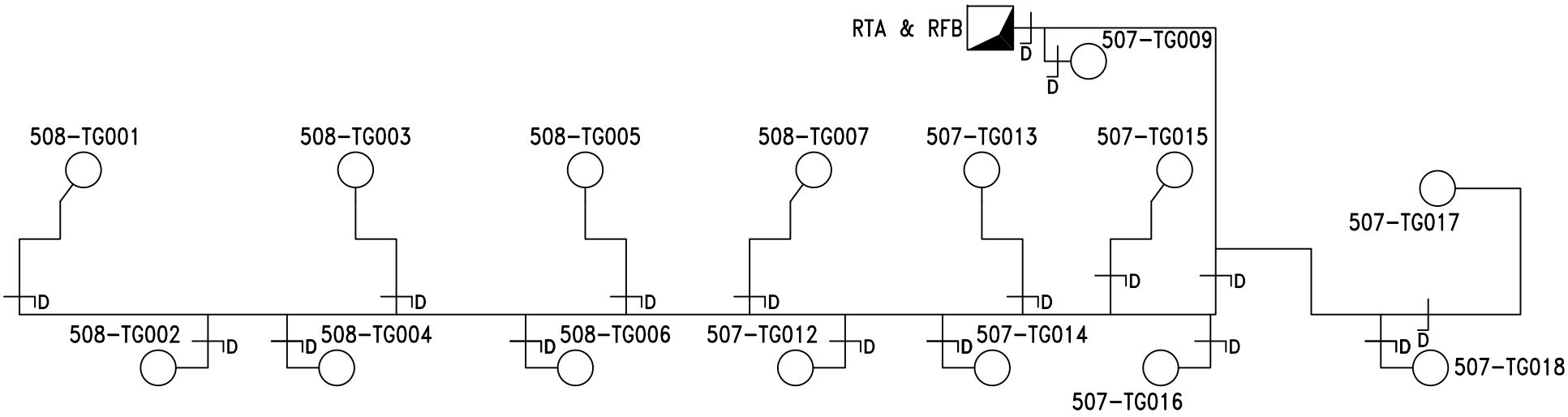

LEVEL 5

SHEET: 11 OF 14

H&V Commissioning Services Limited **Kilknowe Office** **16 Barrmill Road** **Galston** **East Ayrshire, KA4 8HH** **Tel : 01563 821991** **Fax: 01563 822220 email: talk2us@handv.co.uk**	**CONTRACT:** **NSGH, ADULT & CHILDREN'S HOSPITAL - PLANTROOM 123** **CLIENT:** **MERCURY ENGINEERING UK**	**TITLE:** **SCHEMATIC LAYOUT OF** **123-AHU 04 DIRTY EXTRACT (4TH-7TH FLOOR WARDS)**	**DRAWN:** LH/DG **DATE:** 24/11/14 **DRG. No.:** 5902/V03

A49618320

Design Data		Initial Test Data		Final Test & Regulation Data		
Terminal or Ref No	Design Air Volume l/s	Balometer Initial Air Volume l/s	Balometer Final Air Volume l/s	Balometer Factor	Balometer Final Air Volume l/s	% Design
LEVEL 4						
508-TG001	54	45	47	1.17	54.99	102
508-TG002	32	54	28	1.17	32.76	102
508-TG003	45	35	39	1.17	45.63	101
508-TG004	45	38	39	1.17	45.63	101
508-TG005	45	40	39	1.17	45.63	101
508-TG006	45	41	39	1.17	45.63	101
507-TG001	45	42	39	1.17	45.63	101
507-TG002	45	44	39	1.17	45.63	101
507-TG003	45	63	40	1.17	46.80	104
507-TG005	45	54	39	1.17	45.63	101
507-TG004	45	79	39	1.17	45.63	101
507-TG008	45	57	39	1.17	45.63	101
507-TG007	45	65	39	1.17	45.63	101
507-TG006	45	66	39	1.17	45.63	101
507-TG018	44	53	40	1.17	46.80	106

Remarks:

Instrument Used: HV01/15

Date: 23/10/14	Engineer: Daniel Gilliland & Steven Hamilton	Sheet 12 of 14

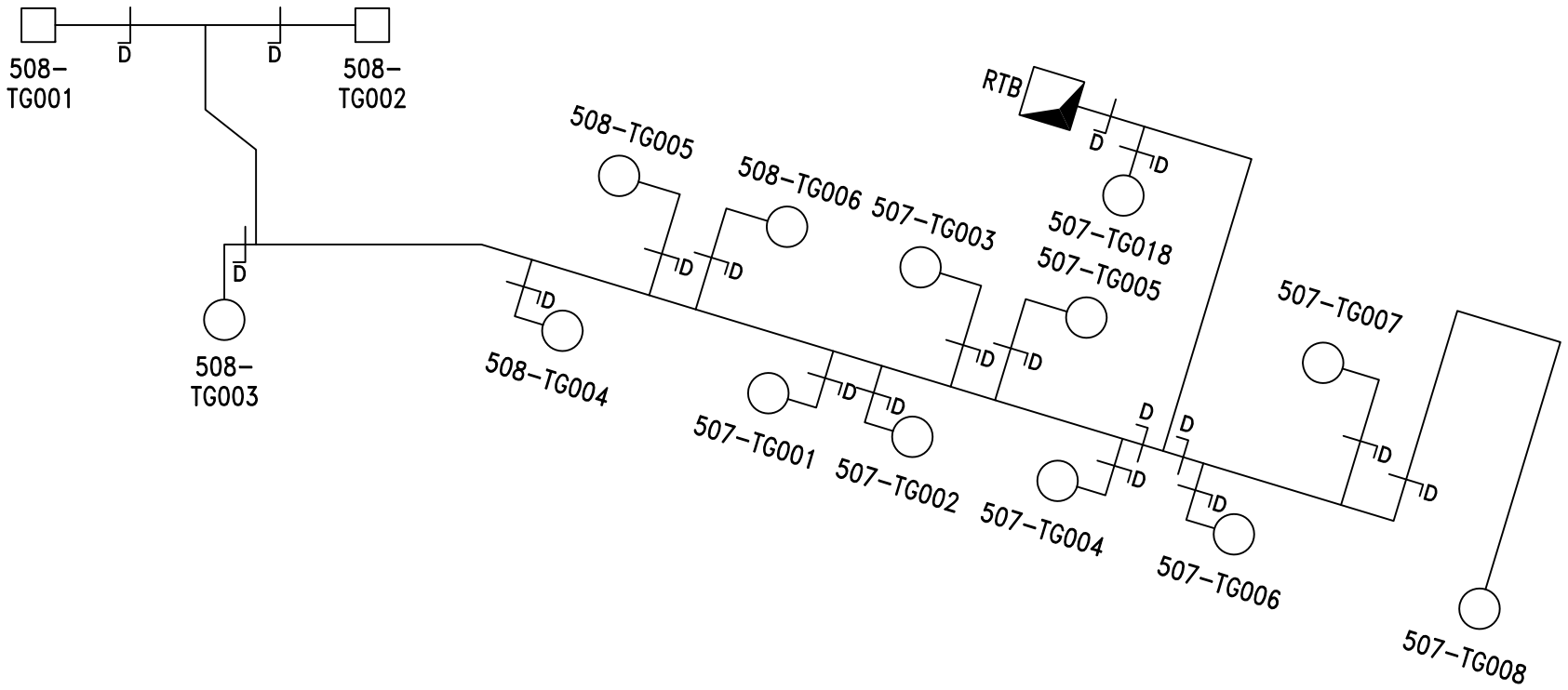

LEVEL 4

SHEET: 13 OF 14

H&V Commissioning Services Limited
Kilknowe Office
16 Barrmill Road
Galston
East Ayrshire, KA4 8HH
Tel : 01563 821991
A49618320
Fax: 01563 822220 email: talk2us@handv.co.uk

CONTRACT:
NSGH, ADULT & CHILDREN'S HOSPITAL - PLANTROOM 123

CLIENT:
MERCURY ENGINEERING UK

TITLE:
SCHEMATIC LAYOUT OF

123-AHU 04 DIRTY EXTRACT (4TH-7TH FLOOR WARDS)

DRAWN: LH/DG

DATE: 24/11/14

DRG. No.: 5902/V04

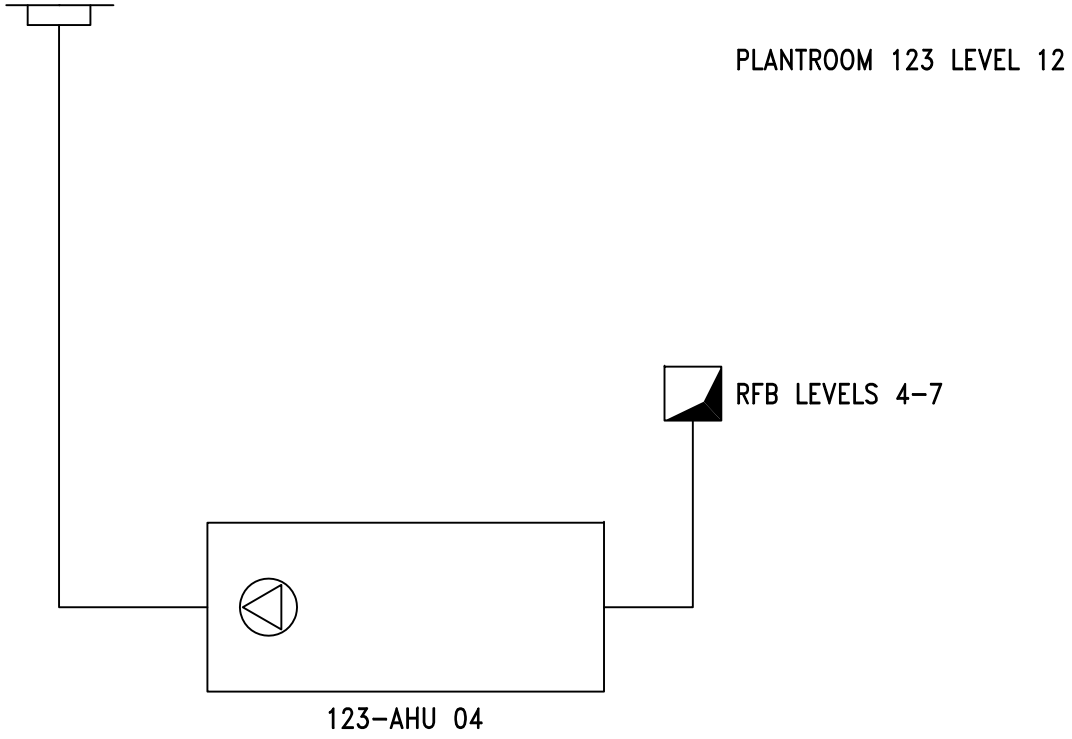

SHEET: 14 OF 14

H&V Commissioning Services Limited
Kilknowe Office
16 Barrmill Road
Galston
East Ayrshire, KA4 8HH
Tel : 01563 821991
A49618320
Fax: 01563 822220 email: talk2us@handv.co.uk

CONTRACT:
NSGH, ADULT & CHILDREN'S HOSPITAL - PLANTROOM 123

CLIENT:
MERCURY ENGINEERING UK

TITLE:
SCHEMATIC LAYOUT OF

123-AHU 04 EXTRACT (4TH-7TH FLOOR WARDS)

DRAWN: LH/DG

DATE: 24/11/14

DRG. No.: 5902/V05

H & V
H & V
H & V

Commissioning Services Ltd
EST: 1975

Kilknowe Office,
16 Barrmill Road,
Galston,
Ayrshire, KA48HH.
TEL N°. 01563 821991
FAX N°. 01563 822220
E-Mail: talk2us@handv.co.uk

CONTRACT: NSGH, ADULT & CHILDRENS HOSPITAL – PLANTROOM 123

SYSTEM: 123 – AHU 05 SUPPLY (4TH TO 7TH FLOOR WARDS)

	AIR SYSTEMS PRE COMMISSIONING SHEET	✓	X	N/A
1.	Check AHU for damage and that all the components are secure	✓		
2.	Check the transit straps have been removed, if applicable	✓		
3.	Check pulleys are secure, tight, aligned and belts are correctly tensioned, if applicable	✓		
4.	Check with the controls engineer that the system is available to run and that plant rotation is correct	✓		
5.	Check all ductwork/air terminals are fitted and that air regulating dampers are open	✓		
6.	Check louvres are fitted and clear from obstructions, if applicable	✓		
7.	Check fire dampers are open, if applicable	✓		
8.	Check the motor overloads are suitable and set			✓
9.	Check VAV or CAV boxes are installed correctly and ready for use.			✓
10.	Check the floor plenums are complete, if applicable			✓
11.	Complete commissioning test sheets.	✓		

COMMENTS

H & V
H & V
H & V

Commissioning Services Ltd
EST: 1975

Kilknowe Office,
16 Barrmill Road,
Galston,
Ayshire, KA48HH.
TEL N°. 01563 821991
FAX N°. 01563 822220
E-Mail: talk2us@handv.co.uk

CONTRACT: NSGH, ADULT & CHILDRENS HOSPITAL – PLANTROOM 123

AHU TEST SHEET

SYSTEM: 123 – AHU 05 SUPPLY (4TH TO 7TH FLOOR WARDS)

AHU									
AHU Manufacturer		Barkell		Fan Size		400			
Fan Manufacturer		Comefri		AHU Serial No		OP1 B302 5384			
Fan Type		Centrifugal		AHU Model N°.		TZAF 400 RFF			
		Design		**Test**				**% Design**	
Air Volume (L/S)		2240		2236				100	
External Static Pressure (Pa)		550		Inlet	120	Outlet	270	Total	390
Fan Rotational Speed (R.P.M)		1902		1900					
Filter Test Data	Pre Filter (Pa)	Inlet	N/A	Outlet	N/A			ΔP	*35
	Sec Filter (Pa)	Inlet	N/A	Outlet	N/A			ΔP	*75

MOTOR				
Manufacturer	TEC	Output kW	3.0	
Serial N°	1306-1197502	Motor Full Load Current	6.52	Amps
Voltage	400	Motor Running Current	5.7	Amps
	Design	**Test**		
Rotational Speed.	1440	1440		

DRIVE DETAILS			
Motor Pulley/Shaft Size (mm∅)	SPZ 140 28	Motor Pulley Taper Lock Size	1610
Fan Pulley/Shaft Size (mm∅)	SPZ 106 40	Fan Pulley Taper Lock Size	1610
Belt Type/Size	XPZ 975	N°. Of Belts	2
Shaft Centres mm	300	Adjustment	- 35 + 25 mm
Variable Speed Drive	Yes	Set Point	50Hz

STANDBY PLANT							
Test Air Volume	2236	Inlet Pressure	120	Motor Rotational Speed	1440	Motor Running Current	
% Design	100	Outlet Pressure	270	Fan Rotational Speed	1900	5.7	Amps
Variable Speed Drive			Yes	Set Point	50Hz		

Comments. N/A – Not Applicable

2nd Motor Serial Number – 1306 – 1197499.

*Filter pressure taken from magnehelic gauge.

Static Pressure Sensor = 270Pa

Instrument Used (Ref N°.) HV01/1, HV01/4 & HV01/5

Date: 27/10/14	Engineer: Daniel Gilliland & Steven Hamilton	Sheet 3 of 14

H & V
H & V
H & V

Commissioning Services Ltd
EST: 1975

Kilknowe Office,
16 Barrmill Road,
Galston,
Ayshire, KA48HH.
TEL N°. 01563 821991
FAX N°. 01563 822220
E-Mail: talk2us@handv.co.uk

CONTRACT: NSGH, ADULT & CHILDRENS HOSPITAL – PLANTROOM 123

DUCT VOLUME TEST SHEET

SYSTEM: 123 – AHU 05 SUPPLY (4TH TO 7TH FLOOR WARDS)

VELOCITY PROFILE (taken facing air flow)

Test Hole Ref		Duct Dia (mm)		Duct Size (mm)		Duct Area		Design Air Volume		Design Air Velocity	
				Width x Height		M2		L/S		M/S	
Main TH				800	650	0.5200		2240		4.31	
4.00	4.50	4.70	4.20	3.80							
4.40	4.50	4.60	4.60	4.30							
4.10	4.40	4.50	4.70	4.30							
3.60	4.10	4.40	4.40	3.90							

Velocity Sub Totals

16.10	17.50	18.20	17.90	16.30							

Total Velocity	Number of Readings	Average Velocity	Measured Air Volume	% Design	Static Pressure
M/S		M/S	L/S		Pa
86	20	4.30	2236	100	230

Remarks:

Instrument Used: HV01/1

Date: 27/10/14 | Engineer: Daniel Gilliland & Steven Hamilton | Sheet 4 of 14

H & V
H & V
H & V

Commissioning Services Ltd
EST: 1975

Kilknowe Office,
16 Barrmill Road,
Galston,
Ayshire, KA48HH.
TEL N°. 01563 821991
FAX N°. 01563 822220
E-Mail: talk2us@handv.co.uk

CONTRACT: NSGH, ADULT & CHILDRENS HOSPITAL – PLANTROOM 123

DUCT VOLUME TEST SHEET

SYSTEM: 123 – AHU 05 SUPPLY (4TH TO 7TH FLOOR WARDS)

VELOCITY PROFILE (taken facing air flow)

Test Hole Ref		Duct Dia (mm)		Duct Size (mm)		Duct Area		Design Air Volume		Design Air Velocity	
				Width x Height		M2		L/S		M/S	
TH1		160				0.0201		40		1.99	
1.90	2.00										
2.00	2.10										
2.10	2.10										
2.00	1.90										
Velocity Sub Totals											
8.00	8.10										

Total Velocity	Number of Readings	Average Velocity	Measured Air Volume	% Design	Static Pressure
M/S		M/S	L/S		Pa
16.1	8	2.01	40	101	42

Remarks: Test Hole for Chilled Beam L2/1 Level 4

Instrument Used: HV01/1

Date: 27/10/14 | Engineer: Daniel Gilliland & Steven Hamilton | Sheet 5 of 14

H & V
H & V
H & V

Commissioning Services Ltd
EST: 1975

Kilknowe Office,
16 Barrmill Road,
Galston,
Ayrshire, KA48HH.
TEL N°. 01563 821991
FAX N°. 01563 822220
E-Mail: talk2us@handv.co.uk

CONTRACT: NSGH, ADULT & CHILDRENS HOSPITAL – PLANTROOM 123

CHILLED BEAM BALANCE SHEET

SYSTEM: 123 – AHU 05 SUPPLY (4TH TO 7TH FLOOR WARDS)

LEVEL 7

Chilled Beam Data			Design Data		Test Data			
No.	Size (mm)	Setting	Volume (l/s)	Pressure (Pa)	Initial Pressure (Pa)	Final Pressure (Pa)	Final Volume (l/s)	% Design
CB/W1/L1/1	N/A	N/A	40	51.8	42	51.5	39.9	100
CB/W1/L1/2	N/A	N/A	40	51.8	47	52	40.08	100
CB/W1/L1/3	N/A	N/A	40	51.8	48	52	40.08	100
CB/W1/L1/4	N/A	N/A	40	51.8	48	52	40.08	100
CB/W1/L1/5	N/A	N/A	40	51.8	62	53	40.5	101
CB/W1/L1/6	N/A	N/A	40	51.8	71	52	40.08	100
CB/W1/L1/7	N/A	N/A	40	51.8	78	53	40.5	101
CB/W1/L1/8	N/A	N/A	40	51.8	76	53	40.5	101
CB/W1/L1/9	N/A	N/A	40	51.8	72	51.5	39.9	100
CB/W1/L1/10	N/A	N/A	40	51.8	85	53	40.5	101
CB/W1/L1/11	N/A	N/A	40	51.8	83	53	40.5	101
CB/W1/L1/12	N/A	N/A	40	51.8	85	54	40.8	102
CB/W1/L1/13	N/A	N/A	40	51.8	87	52	40.08	100
CB/W1/L1/14	N/A	N/A	40	51.8	92	52	40.08	100

REMARKS

INSTRUMENT USED: HV01/1

Date:	27/10/14	Engineer:	Daniel Gilliland & Steven Hamilton	Sheet 6 of 14

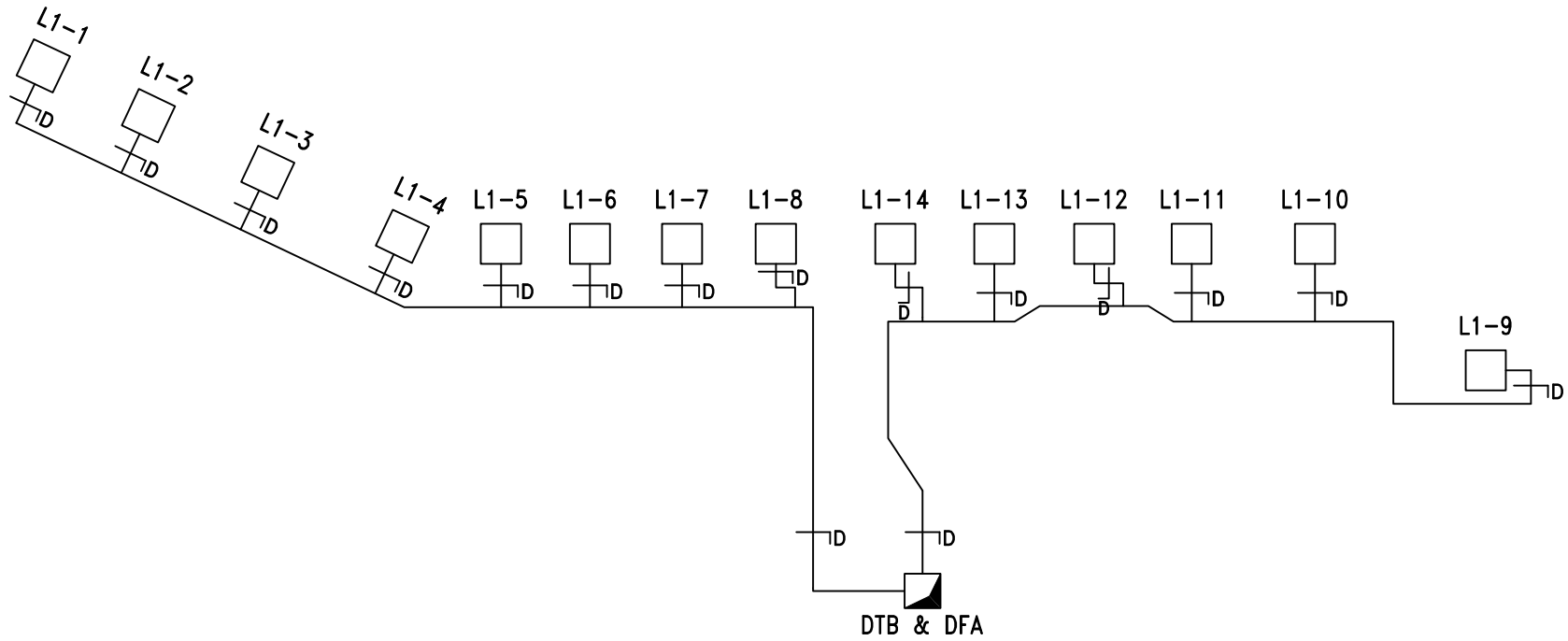

LEVEL 7

SHEET: 7 OF 14

H&V Commissioning Services Limited **Kilknowe Office** **16 Barrmill Road** **Galston** **East Ayrshire, KA4 8HH** **Tel : 01563 821991** **Fax: 01563 822220 email: talk2us@handv.co.uk**	**CONTRACT:** **NSGH, ADULT & CHILDREN'S HOSPITAL - PLANTROOM 123** **CLIENT:** **MERCURY ENGINEERING UK**	**TITLE:** **SCHEMATIC LAYOUT OF** **123-AHU 05 SUPPLY (4TH-7TH FLOOR WARDS)**	**DRAWN:** LH/DG **DATE:** 24/11/14 **DRG. No.:** 5902/V11

A456185220

H & V
H & V
H & V

Commissioning Services Ltd
EST: 1975

Kilknowe Office,
16 Barrmill Road,
Galston,
Ayrshire, KA48HH.
TEL N°. 01563 821991
FAX N°. 01563 822220
E-Mail: talk2us@handv.co.uk

CONTRACT: NSGH, ADULT & CHILDRENS HOSPITAL – PLANTROOM 123

CHILLED BEAM BALANCE SHEET

SYSTEM: 123 – AHU 05 SUPPLY (4TH TO 7TH FLOOR WARDS)

LEVEL 6

Chilled Beam Data			Design Data		Test Data			
No.	Size (mm)	Setting	Volume (l/s)	Pressure (Pa)	Initial Pressure (Pa)	Final Pressure (Pa)	Final Volume (l/s)	% Design
CB/W1/L1/1	N/A	N/A	40	51.8	48	51.5	39.9	100
CB/W1/L1/2	N/A	N/A	40	51.8	52	53	40.5	101
CB/W1/L1/3	N/A	N/A	40	51.8	52	53	40.5	101
CB/W1/L1/4	N/A	N/A	40	51.8	53	52	40.08	100
CB/W1/L1/5	N/A	N/A	40	51.8	60	53	40.5	101
CB/W1/L1/6	N/A	N/A	40	51.8	61	52	40.08	100
CB/W1/L1/7	N/A	N/A	40	51.8	62	52	40.08	100
CB/W1/L1/8	N/A	N/A	40	51.8	64	52	40.08	100
CB/W1/L1/9	N/A	N/A	40	51.8	73	52	40.8	100
CB/W1/L1/10	N/A	N/A	40	51.8	86	53	40.5	101
CB/W1/L1/11	N/A	N/A	40	51.8	84	52	40.8	100
CB/W1/L1/12	N/A	N/A	40	51.8	86	53	40.5	101
CB/W1/L1/13	N/A	N/A	40	51.8	88	54	40.8	102
CB/W1/L1/14	N/A	N/A	40	51.8	93	53	40.5	101

REMARKS

INSTRUMENT USED: HV01/1

Date:	27/10/14	Engineer:	Daniel Gilliland & Steven Hamilton	Sheet 8 of 14

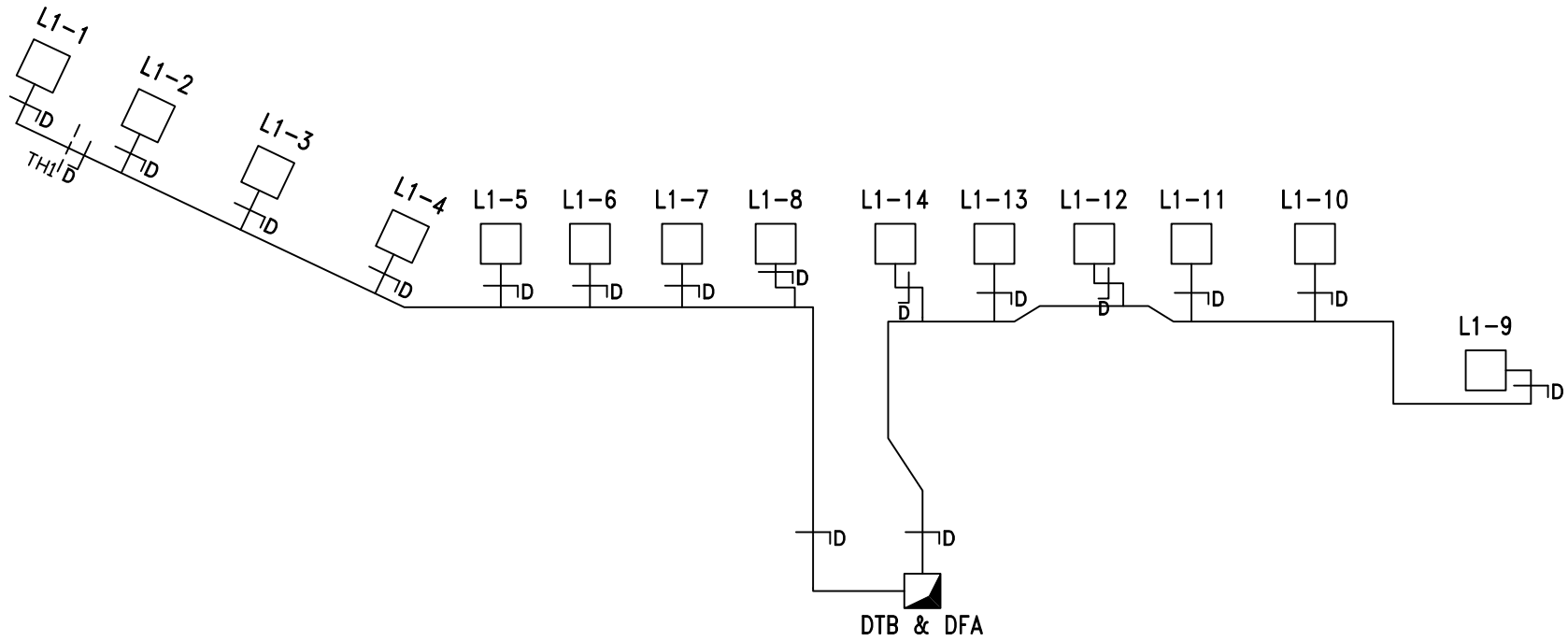

LEVEL 6

SHEET: 9 OF 14

H&V Commissioning Services Limited **Kilknowe Office** **16 Barrmill Road** **Galston** **East Ayrshire, KA4 8HH** **Tel : 01563 821991** **Fax: 01563 822220 email: talk2us@handv.co.uk**	**CONTRACT:** **NSGH, ADULT & CHILDREN'S HOSPITAL - PLANTROOM 123** **CLIENT:** **MERCURY ENGINEERING UK**	**TITLE:** **SCHEMATIC LAYOUT OF** **123-AHU 05 SUPPLY (4TH-7TH FLOOR WARDS)**	**DRAWN:** LH/DG **DATE:** 24/11/14 **DRG. No.:** 5902/V12

A456185220

H & V
H & V
H & V

Commissioning Services Ltd
EST: 1975

Kilknowe Office,
16 Barrmill Road,
Galston,
Ayrshire, KA48HH.
TEL N°. 01563 821991
FAX N°. 01563 822220
E-Mail: talk2us@handv.co.uk

CONTRACT: NSGH, ADULT & CHILDRENS HOSPITAL – PLANTROOM 123

CHILLED BEAM BALANCE SHEET

SYSTEM: 123 – AHU 05 SUPPLY (4TH TO 7TH FLOOR WARDS)

LEVEL 5

Chilled Beam Data			Design Data		Test Data			
No.	Size (mm)	Setting	Volume (l/s)	Pressure (Pa)	Initial Pressure (Pa)	Final Pressure (Pa)	Final Volume (l/s)	% Design
CB/W1/L1/1	N/A	N/A	40	51.8	40	52	40.08	100
CB/W1/L1/2	N/A	N/A	40	51.8	46	52	40.08	100
CB/W1/L1/3	N/A	N/A	40	51.8	47	53	40.5	101
CB/W1/L1/4	N/A	N/A	40	51.8	47	53	40.5	101
CB/W1/L1/5	N/A	N/A	40	51.8	61	53	40.5	101
CB/W1/L1/6	N/A	N/A	40	51.8	70	53	40.5	101
CB/W1/L1/7	N/A	N/A	40	51.8	74	54	40.8	102
CB/W1/L1/8	N/A	N/A	40	51.8	72	54	40.8	102
CB/W1/L1/9	N/A	N/A	40	51.8	70	51.5	39.9	100
CB/W1/L1/10	N/A	N/A	40	51.8	84	52	40.08	100
CB/W1/L1/11	N/A	N/A	40	51.8	85	52	40.08	100
CB/W1/L1/12	N/A	N/A	40	51.8	86	53	40.5	101
CB/W1/L1/13	N/A	N/A	40	51.8	89	53	40.5	101
CB/W1/L1/14	N/A	N/A	40	51.8	90	53	40.5	101

REMARKS

INSTRUMENT USED: HV01/1

Date:	27/10/14	Engineer:	Daniel Gilliland & Steven Hamilton	Sheet 10 of 14

H & V
H & V
H & V

Commissioning Services Ltd
EST: 1975

Kilknowe Office,
16 Barrmill Road,
Galston,
Ayrshire, KA48HH.
TEL N°. 01563 821991
FAX N°. 01563 822220
E-Mail: talk2us@handv.co.uk

CONTRACT: NSGH, ADULT & CHILDRENS HOSPITAL – PLANTROOM 123

CHILLED BEAM BALANCE SHEET

SYSTEM: 123 – AHU 05 SUPPLY (4TH TO 7TH FLOOR WARDS)

LEVEL 4

Chilled Beam Data			Design Data		Test Data			
No.	Size (mm)	Setting	Volume (l/s)	Pressure (Pa)	Initial Pressure (Pa)	Final Pressure (Pa)	Final Volume (l/s)	% Design
CB/W1/L2/1	N/A	N/A	40	63	38	52.5	39.8	100
CB/W1/L2/2	N/A	N/A	40	63	43	63	40	100
CB/W1/L2/3	N/A	N/A	40	63	47	63	40	100
CB/W1/L2/4	N/A	N/A	40	63	47	64	40.3	101
CB/W1/L2/1	N/A	N/A	40	63	49	64	40.3	101
CB/W1/L2/2	N/A	N/A	40	63	48	64	40.3	101
CB/W1/L2/3	N/A	N/A	40	63	52	64	40.3	101
CB/W1/L2/4	N/A	N/A	40	63	53	63	40	100
CB/W1/L2/5	N/A	N/A	40	63	60	63	40	100
CB/W1/L2/6	N/A	N/A	40	63	62	64	40.3	101
CB/W1/L2/7	N/A	N/A	40	63	69	64	40.3	101
CB/W1/L2/8	N/A	N/A	40	63	74	63	40	101
CB/W1/L2/9	N/A	N/A	40	63	87	65	40.3	102
CB/W1/L2/10	N/A	N/A	40	63	90	65	40.3	102

REMARKS

INSTRUMENT USED: HV01/1

Date:	27/10/14	Engineer:	Daniel Gilliland & Steven Hamilton	Sheet 12 of 14

ALL CHILLED BEAMS PRE-FIXED CB/W1/

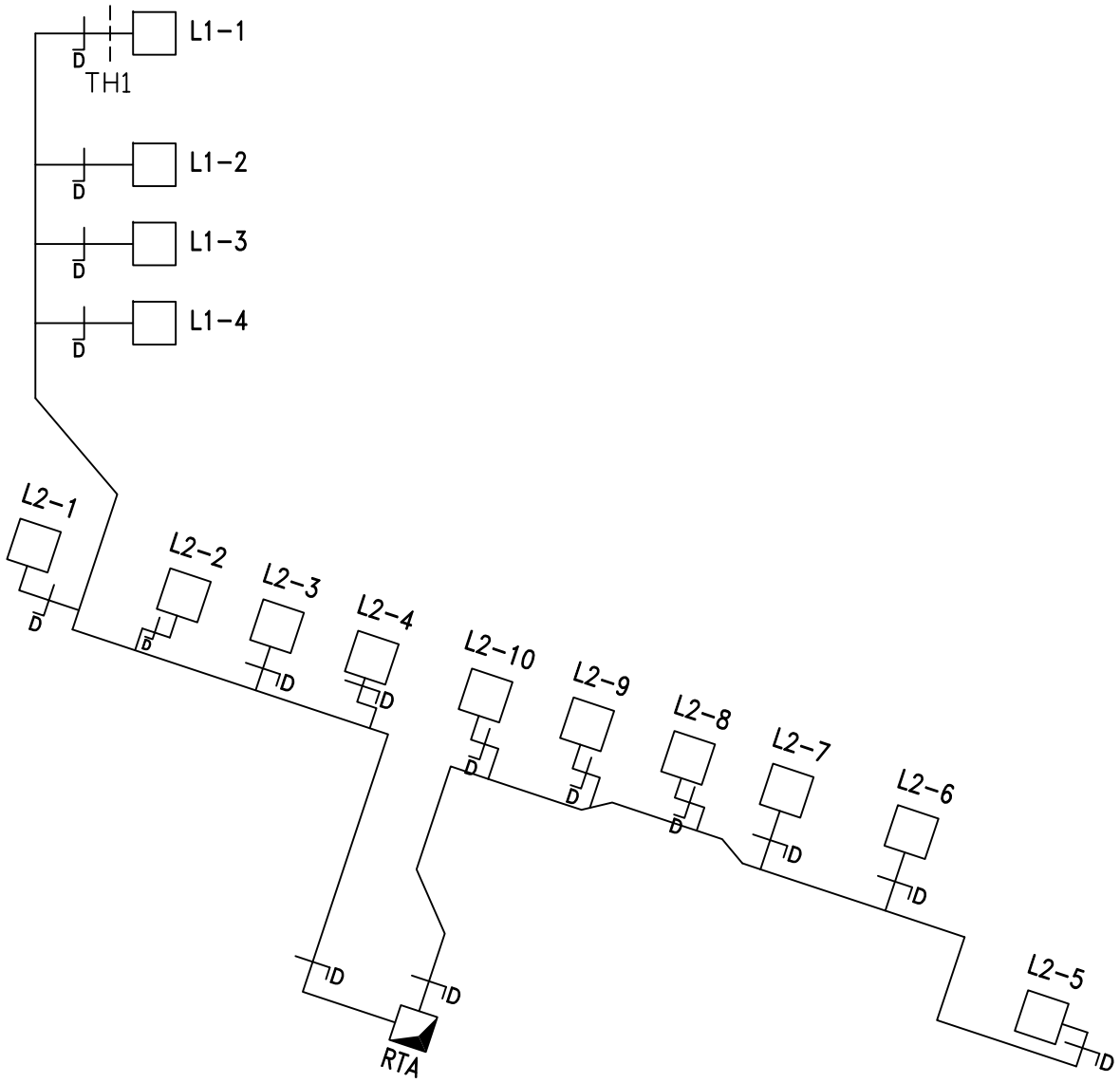

LEVEL 4

H&V Commissioning Services Limited
Kilknowe Office
16 Barrmill Road
Galston
East Ayrshire, KA4 8HH
Tel : 01563 821991
A49618320
Fax: 01563 822220 email: talk2us@handv.co.uk

CONTRACT:
NSGH, ADULT & CHILDREN'S HOSPITAL - PLANTROOM 123

CLIENT:
MERCURY ENGINEERING UK

TITLE:
SCHEMATIC LAYOUT OF

123-AHU 05 SUPPLY (4TH-7TH FLOOR WARDS)

DRAWN: LH/DG

DATE: 24/11/14

DRG. No.: 5902/V14

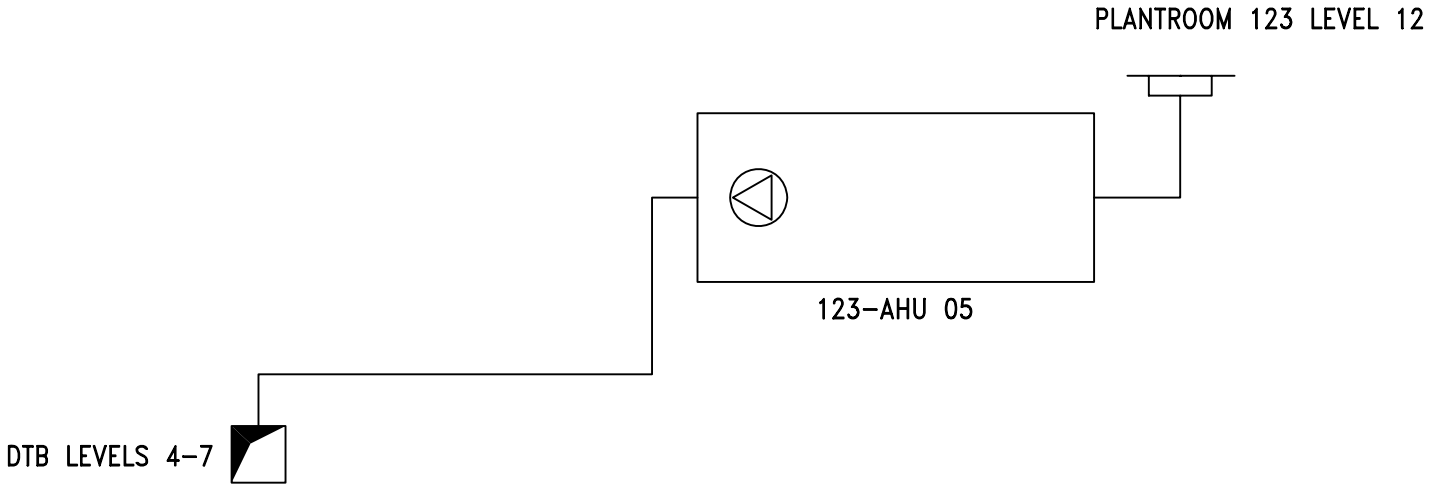

SHEET: 14 OF 14

H&V Commissioning Services Limited
Kilknowe Office
16 Barrmill Road
Galston
East Ayrshire, KA4 8HH
Tel : 01563 821991
A49618320
Fax: 01563 822220 email: talk2us@handv.co.uk

CONTRACT:
NSGH, ADULT & CHILDREN'S HOSPITAL - PLANTROOM 123

CLIENT:
MERCURY ENGINEERING UK

TITLE:
SCHEMATIC LAYOUT OF

123-AHU 05 SUPPLY (4TH-7TH FLOOR WARDS)

DRAWN: LH/DG

DATE: 24/11/14

DRG. No.: 5902/V13

H & V
H & V
H & V

Commissioning Services Ltd
EST: 1975

Kilknowe Office,
16 Barrmill Road,
Galston,
Ayrshire, KA48HH.
TEL N°. 01563 821991
FAX N°. 01563 822220
E-Mail: talk2us@handv.co.uk

CONTRACT: NSGH, ADULT & CHILDRENS HOSPITAL – PLANTROOM 123

SYSTEM: 123 – AHU 05 DIRTY EXTRACT (4TH TO 7TH FLOOR WARDS)

	AIR SYSTEMS PRE COMMISSIONING SHEET	✓	X	N/A
1.	Check AHU for damage and that all the components are secure	✓		
2.	Check the transit straps have been removed, if applicable	✓		
3.	Check pulleys are secure, tight, aligned and belts are correctly tensioned, if applicable	✓		
4.	Check with the controls engineer that the system is available to run and that plant rotation is correct	✓		
5.	Check all ductwork/air terminals are fitted and that air regulating dampers are open	✓		
6.	Check louvres are fitted and clear from obstructions, if applicable	✓		
7.	Check fire dampers are open, if applicable	✓		
8.	Check the motor overloads are suitable and set			✓
9.	Check VAV or CAV boxes are installed correctly and ready for use.			✓
10.	Check the floor plenums are complete, if applicable			✓
11.	Complete commissioning test sheets.	✓		

COMMENTS

H & V
H & V
H & V

Commissioning Services Ltd
EST: 1975

Kilknowe Office,
16 Barrmill Road,
Galston,
Ayshire, KA48HH.
TEL N°. 01563 821991
FAX N°. 01563 822220
E-Mail: talk2us@handv.co.uk

CONTRACT: NSGH, ADULT & CHILDRENS HOSPITAL – PLANTROOM 123

AHU TEST SHEET

SYSTEM: 123 – AHU 05 DIRTY EXTRACT (4TH TO 7TH FLOOR WARDS)

AHU											
AHU Manufacturer			Barkell		Fan Size			400			
Fan Manufacturer			Comefri		AHU Serial No			OP1 B305 8003			
Fan Type			Centrifugal		AHU Model N°.			TZAF 450 RFF			
			Design			**Test**				**% Design**	
Air Volume	(L/S)		3109			3348				108	
External Static Pressure	(Pa)		400		Inlet	284	Outlet	100	Total	384	
Fan Rotational Speed	(R.P.M)		1740			1703					
Filter Test Data	Pre Filter	(Pa)	Inlet	N/A	Outlet	N/A			ΔP	N/A	
	Sec Filter	(Pa)	Inlet	N/A	Outlet	N/A			ΔP	*50	

MOTOR				
Manufacturer	TEC	Output kW	3.0	
Serial N°	1305-0265963	Motor Full Load Current	10.9	Amps
Voltage	400	Motor Running Current	7.9	Amps
	Design	**Test**		
Rotational Speed.	1450	1420		

DRIVE DETAILS				
Motor Pulley/Shaft Size (mm∅)	SPZ 180	38	Motor Pulley Taper Lock Size	2012
Fan Pulley/Shaft Size (mm∅)	SPZ 150	50	Fan Pulley Taper Lock Size	2517
Belt Type/Size	XPZ	1112	N°. Of Belts	4
Shaft Centres mm	300		Adjustment	- 30 + 30 mm
Variable Speed Drive	Yes		Set Point	49Hz

STANDBY PLANT						
Test Air Volume	3348	Inlet Pressure	284	Motor Rotational Speed	1420	Motor Running Current
% Design	98	Outlet Pressure	100	Fan Rotational Speed	1703	7.9 Amps
Variable Speed Drive			Yes	Set Point	49Hz	

Comments. N/A – Not Applicable

2nd Motor Serial Number – 1305-0266180.

*Filter pressure taken from magnehelic gauge.

Instrument Used (Ref N°.) HV01/1, HV01/4 & HV01/5

Date: 30/10/14	Engineer: Daniel Gilliland & Steven Hamilton	Sheet 3 of 14

H & V
H & V
H & V

Commissioning Services Ltd
EST: 1975

Kilknowe Office,
16 Barrmill Road,
Galston,
Ayshire, KA48HH.
TEL N°. 01563 821991
FAX N°. 01563 822220
E-Mail: talk2us@handv.co.uk

CONTRACT: NSGH, ADULT & CHILDRENS HOSPITAL – PLANTROOM 123

DUCT VOLUME TEST SHEET

SYSTEM: 123 – AHU 05 DIRTY EXTRACT (4TH TO 7TH FLOOR WARDS)

VELOCITY PROFILE (taken facing air flow)

Test Hole Ref		Duct Dia (mm)		Duct Size (mm)		Duct Area		Design Air Volume		Design Air Velocity	
				Width x Height		M2		L/S		M/S	
Main TH				1150	650	0.7475		3109		4.16	
4.80	4.60	4.60	4.80	4.80	4.80						
5.20	5.20	5.10	4.80	4.20	4.70						
5.10	5.00	4.50	3.60	3.40	4.00						
4.40	4.30	4.10	3.40	3.90	4.20						
Velocity Sub Totals											
19.50	19.10	18.30	16.60	16.30	17.70						

Total Velocity	Number of Readings	Average Velocity	Measured Air Volume	% Design	Static Pressure
M/S		M/S	L/S		Pa
107.5	24	4.48	3348	108	190

Remarks:

Instrument Used: HV01/1

Date: 30/10/14 | Engineer: Daniel Gilliland & Steven Hamilton | Sheet 4 of 14

H & V
H & V
H & V

Commissioning Services Ltd
EST: 1975

Kilknowe Office,
16 Barrmill Road,
Galston,
Ayshire, KA48HH.
TEL N°. 01563 821991
FAX N°. 01563 822220
E-Mail: talk2us@handv.co.uk

CONTRACT: NSGH, ADULT & CHILDRENS HOSPITAL – PLANTROOM 123

DUCT VOLUME TEST SHEET

SYSTEM: 123 – AHU 05 DIRTY EXTRACT (4TH TO 7TH FLOOR WARDS)

LEVEL 7

Design Data		Initial Test Data		Final Test & Regulation Data		
Terminal or Ref No	Design Air Volume l/s	Balometer Initial Air Volume l/s	Balometer Final Air Volume l/s	Balometer Factor	Balometer Final Air Volume l/s	% Design
*TG001	35	34	30	1.19	35.70	102
*TG003	45	38	39	1.19	46.41	103
*TG002	45	43	40	1.19	47.60	106
*TG004	45	44	40	1.19	47.60	106
*TG005	45	44	40	1.19	47.60	106
*TG006	45	45	41	1.19	48.79	108
*TG007	45	57	41	1.19	48.79	108
**TG001	45	62	40	1.19	47.60	106
**TG003	45	55	41	1.19	48.79	108
**TG002	45	64	41	1.19	48.79	108
**TG008	45	39	39	1.19	46.41	103
**TG006	45	48	40	1.19	47.60	106
**TG007	45	56	40	1.19	47.60	106
**TG005	45	57	40	1.19	47.60	106
**TG004	45	55	41	1.19	48.79	108
**TG011	62	146	54	1.19	64.26	104
**TG010	59	136	54	1.19	64.26	109

Remarks: *Grilles prefixed with 506-. **Grilles prefixed with 507-

Instrument Used: HV01/15

Date: 30/10/14	Engineer: Daniel Gilliland & Steven Hamilton	Sheet 6 of 14

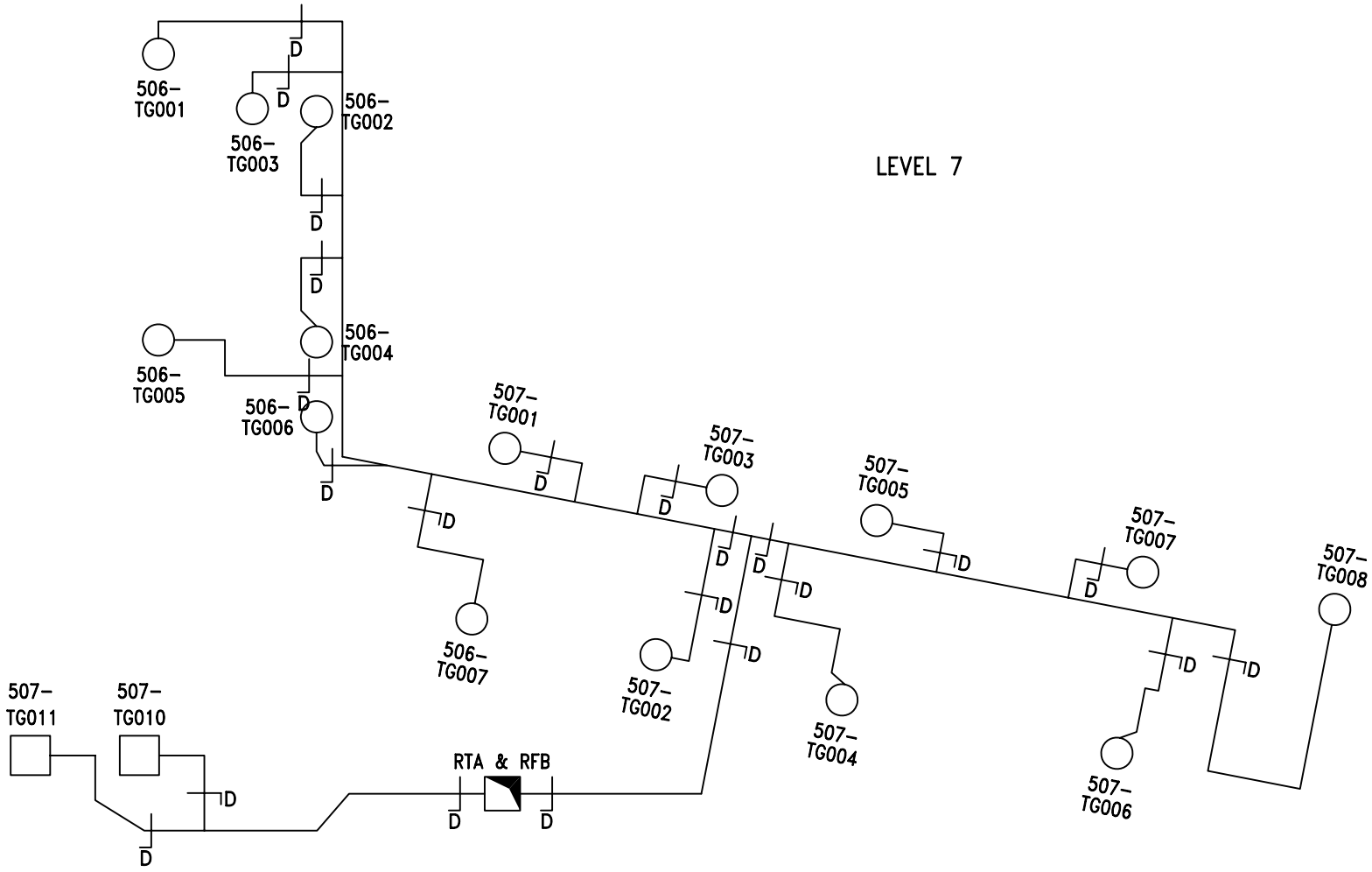

H&V Commissioning Services Limited
Kilknowe Office
16 Barrmill Road
Galston
East Ayrshire, KA4 8HH
Tel : 01563 821991
Fax: 01563 822220
email: talk2us@handv.co.uk

CONTRACT:
NSGH, ADULT & CHILDREN'S HOSPITAL - PLANTROOM 123

CLIENT:
MERCURY ENGINEERING LTD.

TITLE:
SCHEMATIC LAYOUT OF 123-AHU05 DIRTY EXTRACT (4TH-7TH FLOOR WARDS)

DRAWN: LH/DG
DATE: 09/01/15
DRG No.: 5902/V15
SHEET: 7 OF 14

H & V
H & V
H & V

Commissioning Services Ltd
EST: 1975

Kilknowe Office,
16 Barrmill Road,
Galston,
Ayrshire, KA48HH.
TEL N°. 01563 821991
FAX N°. 01563 822220
E-Mail: talk2us@handv.co.uk

CONTRACT: NSGH, ADULT & CHILDRENS HOSPITAL – PLANTROOM 123

GRILLE TEST SHEET

SYSTEM: 123 – AHU 05 DIRTY EXTRACT (4TH TO 7TH FLOOR WARDS)

LEVEL 6

Design Data		Initial Test Data		Final Test & Regulation Data		
Terminal or Ref No	Design Air Volume l/s	Balometer Initial Air Volume l/s	Balometer Final Air Volume l/s	Balometer Factor	Balometer Final Air Volume l/s	% Design
*TG001	35	33	31	1.19	36.89	105
*TG003	45	37	40	1.19	47.60	106
*TG002	45	42	41	1.19	48.79	108
*TG004	45	43	41	1.19	48.79	108
*TG005	45	53	40	1.19	47.60	106
*TG006	45	44	41	1.19	48.79	108
*TG007	45	56	41	1.19	48.79	108
**TG001	45	61	41	1.19	48.79	108
**TG003	45	54	41	1.19	48.79	108
**TG002	45	57	41	1.19	48.79	108
**TG008	45	38	40	1.19	47.60	106
**TG006	45	47	40	1.19	47.60	106
**TG007	45	51	40	1.19	47.60	106
**TG005	45	56	41	1.19	48.79	108
**TG004	45	54	41	1.19	48.79	108
**TG011	62	132	56	1.19	66.64	107
**TG010	59	127	54	1.19	64.26	109

Remarks: *All Grilles prefixed with 506. **All Grilles prefixed with 507.

Instrument Used: HV01/15

Date: 30/10/14	Engineer: Daniel Gilliland & Steven Hamilton	Sheet 8 of 14

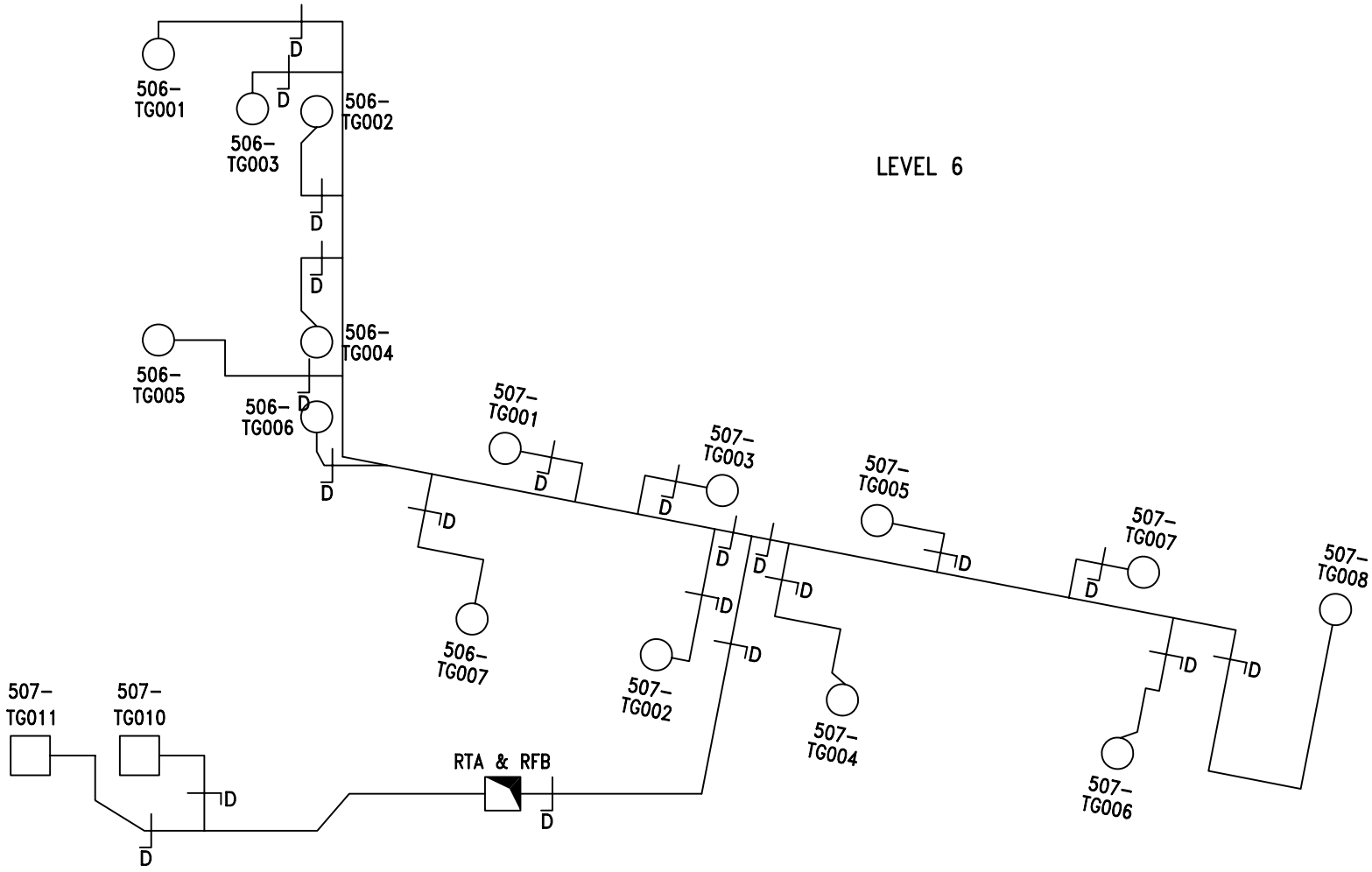

H&V Commissioning Services Limited
Kilknowe Office
16 Barrmill Road
Galston
East Ayrshire, KA4 8HH
Tel : 01563 821991
Fax: 01563 822220
email: talk2us@handv.co.uk

CONTRACT:
NSGH, ADULT & CHILDREN'S HOSPITAL - PLANTROOM 123

CLIENT:
MERCURY ENGINEERING LTD.

TITLE:
SCHEMATIC LAYOUT OF 123-AHU05 DIRTY EXTRACT (4TH-7TH FLOOR WARDS)

DRAWN: LH/DG
DATE: 09/01/15
DRG No.: 5902/V16
SHEET: 9 OF 14

H & V
H & V
H & V

Commissioning Services Ltd
EST: 1975

Kilknowe Office,
16 Barrmill Road,
Galston,
Ayrshire, KA48HH.
TEL N°. 01563 821991
FAX N°. 01563 822220
E-Mail: talk2us@handv.co.uk

CONTRACT: NSGH, ADULT & CHILDRENS HOSPITAL – PLANTROOM 123

GRILLE TEST SHEET

SYSTEM: 123 – AHU 05 DIRTY EXTRACT (4TH TO 7TH FLOOR WARDS)

LEVEL 5

Design Data		Initial Test Data		Final Test & Regulation Data		
Terminal or Ref No	Design Air Volume l/s	Balometer Initial Air Volume l/s	Balometer Final Air Volume l/s	Balometer Factor	Balometer Final Air Volume l/s	% Design
*TG001	35	29	30	1.19	35.70	102
*TG003	45	31	40	1.19	47.60	106
*TG002	45	36	41	1.19	48.79	108
*TG004	45	40	40	1.19	47.60	106
*TG005	45	42	41	1.19	48.79	108
*TG006	45	42	41	1.19	48.79	108
*TG007	45	44	41	1.19	48.79	108
**TG001	45	46	41	1.19	48.79	108
**TG003	45	46	41	1.19	48.79	108
**TG002	45	49	41	1.19	48.79	108
**TG008	45	46	39	1.19	46.41	103
**TG006	45	47	40	1.19	47.60	106
**TG007	45	49	41	1.19	48.79	108
**TG005	45	50	41	1.19	48.79	108
**TG004	45	54	46	1.19	54.74	122
**TG011	62	141	57	1.19	67.83	109
**TG010	59	111	54	1.19	64.26	109

Remarks: *All Grilles prefixed with 506. **All Grilles prefixed with 507.

Instrument Used: HV01/15

Date: 30/10/14	Engineer: Daniel Gilliland & Steven Hamilton	Sheet 10 of 14

H & V
H & V
H & V

Commissioning Services Ltd
EST: 1975

Kilknowe Office,
16 Barrmill Road,
Galston,
Ayrshire, KA48HH.
TEL N°. 01563 821991
FAX N°. 01563 822220
E-Mail: talk2us@handv.co.uk

CONTRACT: NSGH, ADULT & CHILDRENS HOSPITAL – PLANTROOM 123

GRILLE TEST SHEET

SYSTEM: 123 – AHU 05 DIRTY EXTRACT (4TH TO 7TH FLOOR WARDS)

LEVEL 4

Design Data		Initial Test Data		Final Test & Regulation Data		
Terminal or Ref No	Design Air Volume l/s	Balometer Initial Air Volume l/s	Balometer Final Air Volume l/s	Balometer Factor	Balometer Final Air Volume l/s	% Design
*TG002	45	35	39	1.19	46.40	103
*TG001	45	38	40	1.19	47.60	106
*TG003	45	38	40	1.19	47.60	106
*TG004	45	36	41	1.19	48.80	108
*TG005	45	47	40	1.19	47.60	106
*TG006	45	43	39	1.19	46.40	103
**TG016	45	46	39	1.19	46.40	103
**TG015	45	49	40	1.19	47.60	106
**TG014	45	57	40	1.19	47.60	106
**TG009	45	46	391	1.19	46.40	103
**TG010	45	46	40	1.19	47.60	106
**TG011	45	49	40	1.19	47.60	106
**TG012	45	51	40	1.19	47.60	106
**TG013	45	55	40	1.19	47.60	106
***TG007	62	110	57	1.19	67.80	109
**TG017	59	94	53	1.19	63.10	107

Remarks: *All Grilles prefixed with 506. **All Grilles prefixed with 507. ***Grille prefixed with 508.

Instrument Used: HV01/15

Date: 30/10/14	Engineer: Daniel Gilliland & Steven Hamilton	Sheet 12 of 14

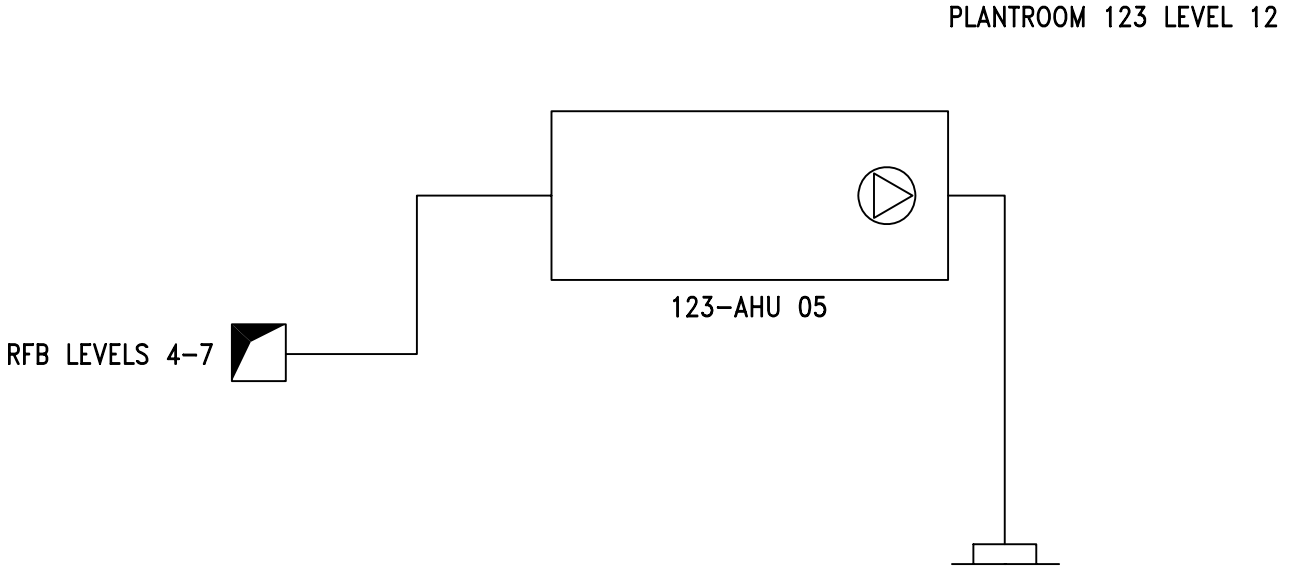

SHEET: 14 OF 14

H&V Commissioning Services Limited
Kilknowe Office
16 Barrmill Road
Galston
East Ayrshire, KA4 8HH
Tel : 01563 821991
A49618320
Fax: 01563 822220 email: talk2us@handv.co.uk

CONTRACT:
NSGH, ADULT & CHILDREN'S HOSPITAL - PLANTROOM 123

CLIENT:
MERCURY ENGINEERING UK

TITLE:
SCHEMATIC LAYOUT OF

123-AHU 05 EXTRACT (4TH-7TH FLOOR WARDS)

DRAWN: LH/DG

DATE: 24/11/14

DRG. No.: 5902/V17

H & V
H & V
H & V

Commissioning Services Ltd
EST: 1975

Kilknowe Office,
16 Barrmill Road,
Galston,
Ayrshire, KA48HH.
TEL N°. 01563 821991
FAX N°. 01563 822220
E-Mail: talk2us@handv.co.uk

CONTRACT: NSGH, ADULT & CHILDRENS HOSPITAL – PLANTROOM 123

SYSTEM: 123 - AHU 06 SUPPLY (4TH TO 7TH FLOOR WARDS)

WITNESSING OF TESTING AND BALANCING

	Client Representative / Commissioning Manager	Client
Witnessed By:	Julie Miller	
Representing:	Brookfield Multiplex	
Signature:	[redacted]	
Date:	15/1/15	
Witnessed By:		
Representing:		
Signature:		
Date:		

Remarks:

H & V
H & V
H & V

Commissioning Services Ltd
EST: 1975

Kilknowe Office,
16 Barrmill Road,
Galston,
Ayrshire, KA48HH.
TEL N°. 01563 821991
FAX N°. 01563 822220
E-Mail: talk2us@handv.co.uk

CONTRACT: NSGH, ADULT & CHILDRENS HOSPITAL – PLANTROOM 123

SYSTEM: 123 – AHU 06 SUPPLY (4TH TO 7TH FLOOR WARDS)

	AIR SYSTEMS PRE COMMISSIONING SHEET	✓	X	N/A
1.	Check AHU for damage and that all the components are secure	✓		
2.	Check the transit straps have been removed, if applicable	✓		
3.	Check pulleys are secure, tight, aligned and belts are correctly tensioned, if applicable	✓		
4.	Check with the controls engineer that the system is available to run and that plant rotation is correct	✓		
5.	Check all ductwork/air terminals are fitted and that air regulating dampers are open	✓		
6.	Check louvres are fitted and clear from obstructions, if applicable	✓		
7.	Check fire dampers are open, if applicable	✓		
8.	Check the motor overloads are suitable and set			✓
9.	Check VAV or CAV boxes are installed correctly and ready for use.			✓
10.	Check the floor plenums are complete, if applicable			✓
11.	Complete commissioning test sheets.	✓		

COMMENTS

H & V
H & V
H & V

Commissioning Services Ltd
EST: 1975

Kilknowe Office,
16 Barrmill Road,
Galston,
Ayshire, KA48HH.
TEL N°. 01563 821991
FAX N°. 01563 822220
E-Mail: talk2us@handv.co.uk

CONTRACT: NSGH, ADULT & CHILDRENS HOSPITAL – PLANTROOM 123

AHU TEST SHEET

SYSTEM: 123 – AHU 06 SUPPLY (4TH TO 7TH FLOOR WARDS)

AHU											
AHU Manufacturer			Barkell		Fan Size			450			
Fan Manufacturer			Comefri		AHU Serial No			OP1 B305 8003			
Fan Type			Centrifugal		AHU Model N°.			TZAF 450 RFF			
			Design			**Test**				**% Design**	
Air Volume (L/S)			3071			3304				108	
External Static Pressure (Pa)			550		Inlet	111	Outlet	341	Total	452	
Fan Rotational Speed (R.P.M)			1836			1799					
Filter Test Data	Pre Filter (Pa)	Inlet	*		Outlet	*			ΔP	*50	
	Sec Filter (Pa)	Inlet	*		Outlet	*			ΔP	*100	

MOTOR				
Manufacturer	TEC	Output kW	5.5	
Serial N°	1305-0265975	Motor Full Load Current	10.9	Amps
Voltage	400	Motor Running Current	8.5	Amps
	Design	**Test**		
Rotational Speed.	1430	1420		

DRIVE DETAILS				
Motor Pulley/Shaft Size (mm∅)	SPZ 190	38	Motor Pulley Taper Lock Size	2012
Fan Pulley/Shaft Size (mm∅)	SPZ 150	50	Fan Pulley Taper Lock Size	2517
Belt Type/Size	XPZ	1120	N°. Of Belts	4
Shaft Centres mm	300		Adjustment	- 30 + 25 mm
Variable Speed Drive	Yes		Set Point	49 Hz

STANDBY PLANT							
Test Air Volume	3304	Inlet Pressure	111	Motor Rotational Speed	1420	Motor Running Current	
% Design	108	Outlet Pressure	341	Fan Rotational Speed	1799	8.5	Amps
Variable Speed Drive			Yes	Set Point	49Hz		

Comments.

2nd Motor Serial Number – 1305-0265960.

*Filter pressure taken from magnehelic gauge.

Static Pressure Sensor = 341 Pa

Instrument Used (Ref N°.) HV06/1, HV06/4, HV06/5

Date: 6/11/14	Engineer: Ross Parker & Daniel Kane	Sheet 3 of 14

H & V
H & V
H & V

Commissioning Services Ltd
EST: 1975

Kilknowe Office,
16 Barrmill Road,
Galston,
Ayshire, KA48HH.
TEL N°. 01563 821991
FAX N°. 01563 822220
E-Mail: talk2us@handv.co.uk

CONTRACT: NSGH, ADULT & CHILDRENS HOSPITAL – PLANTROOM 123

DUCT VOLUME TEST SHEET

SYSTEM: 123 – AHU 06 SUPPLY (4TH TO 7TH FLOOR WARDS)

VELOCITY PROFILE (taken facing air flow) **TEST HOLE LOCATION: LEVEL 8 RISER**

Test Hole Ref		Duct Dia (mm)		Duct Size (mm)		Duct Area		Design Air Volume		Design Air Velocity	
				Width x Height		M2		L/S		M/S	
Main TH				950	750	0.7125		3071		4.31	
4.80	4.80	4.70	5.00	5.10	4.00						
4.80	4.80	4.80	4.80	5.00	4.90						
4.70	4.50	4.60	4.70	4.90	4.80						
4.50	4.00	4.70	4.80	4.90	4.60						
3.80	4.20	4.50	4.80	4.50	4.10						

Velocity Sub Totals

22.60	22.30	23.30	24.10	24.40	22.40						

Total Velocity	Number of Readings	Average Velocity	Measured Air Volume	% Design	Static Pressure
M/S		M/S	L/S		Pa
139.1	30	4.64	3304	108	181

Remarks:

Instrument Used: HV06/1

Date: 7/11/14 | Engineer: Ross Parker & Daniel Kane | Sheet 4 of 14

H & V
H & V
H & V

Commissioning Services Ltd
EST: 1975

Kilknowe Office,
16 Barrmill Road,
Galston,
Ayshire, KA48HH.
TEL N°. 01563 821991
FAX N°. 01563 822220
E-Mail: talk2us@handv.co.uk

CONTRACT: NSGH, ADULT & CHILDRENS HOSPITAL – PLANTROOM 123

DUCT VOLUME TEST SHEET

SYSTEM: 123 – AHU 06 SUPPLY (4TH TO 7TH FLOOR WARDS)

VELOCITY PROFILE (taken facing air flow) **TEST HOLE LOCATION: CEILING VOID**

Test Hole Ref		Duct Dia (mm)		Duct Size (mm)		Duct Area		Design Air Volume		Design Air Velocity	
				Width x Height		M2		L/S		M/S	
TH1		160				0.0201		50		2.49	
2.10	2.00										
3.00	3.00										
3.10	3.10										
2.90	2.80										
Velocity Sub Totals											
11.10	10.90										

Total Velocity	Number of Readings	Average Velocity	Measured Air Volume	% Design	Static Pressure
M/S		M/S	L/S		Pa
22	8	2.75	55	111	21

Remarks: Serves Grille 5-508-SG001. Test Volume 55 l/s ÷ Balometer Volume 52 l/s = 1.06 Factor.

Instrument Used: HV06/1

Date: 7/11/14 | Engineer: Ross Parker & Daniel Kane | Sheet 5 of 14

H & V
H & V
H & V

Commissioning Services Ltd

EST: 1975

Kilknowe Office,
16 Barrmill Road,
Galston,
Ayrshire, KA48HH.
TEL N°. 01563 821991
FAX N°. 01563 822220
E-Mail: talk2us@handv.co.uk

CONTRACT: NSGH, ADULT & CHILDRENS HOSPITAL – PLANTROOM 123

GRILLE TEST SHEET **SYSTEM: 123 – AHU 06 SUPPLY (4TH TO 7TH FLOOR WARDS)**

LEVEL 4

Design Data		Initial Test Data		Final Test & Regulation Data		
Terminal or Ref No	Design Air Volume l/s	Balometer Initial Air Volume l/s	Balometer Final Air Volume l/s	Balometer Factor	Balometer Final Air Volume l/s	% Design
508-SG015	40	31	41	1.06	43.46	109
508-SG014	40	41	40	1.06	42.40	106
508-SG013	40	41	39	1.06	41.34	103
508-SG012	42	39	42	1.06	44.52	106
508-SG001	43	32	42	1.06	44.52	104
508-SG002	40	42	39	1.06	41.34	103
508-SG011	30	46	30	1.06	31.80	106
508-SG003	26	32	27	1.06	28.62	110
508-SG004	40	68	41	1.06	43.46	109
507-SG005	41	45	42	1.06	44.52	109
508-SG009	49	48	50	1.06	53.00	108
508-SG008	45	50	45	1.06	47.70	106
508-SG007	10	21	10	1.06	10.60	106
508-SG010	19	32	19	1.06	20.14	106
508-SG006	30	64	30	1.06	31.80	106
508-SG005	66	102	66	1.06	69.96	106
506-SG004	18	23	18	1.06	19.08	106
506-SG003	18	26	18	1.06	19.08	106
506-SG002	50	113	50	1.06	53.00	106
506-SG001	50	94	51	1.06	54.06	108
507-SG001	44	43	45	1.06	47.70	108
507-SG002	25	16	25	1.06	26.50	106
507-SG003	18	17	18	1.06	19.08	106
507-SG004	78	91	79	1.06	83.74	107
506-SG005	36	35	36	1.06	38.16	106

Remarks

Instrument Used: HV06/15

Date: 6/11/14	Engineer: Ross Parker & Daniel Kane	Sheet 6 of 14

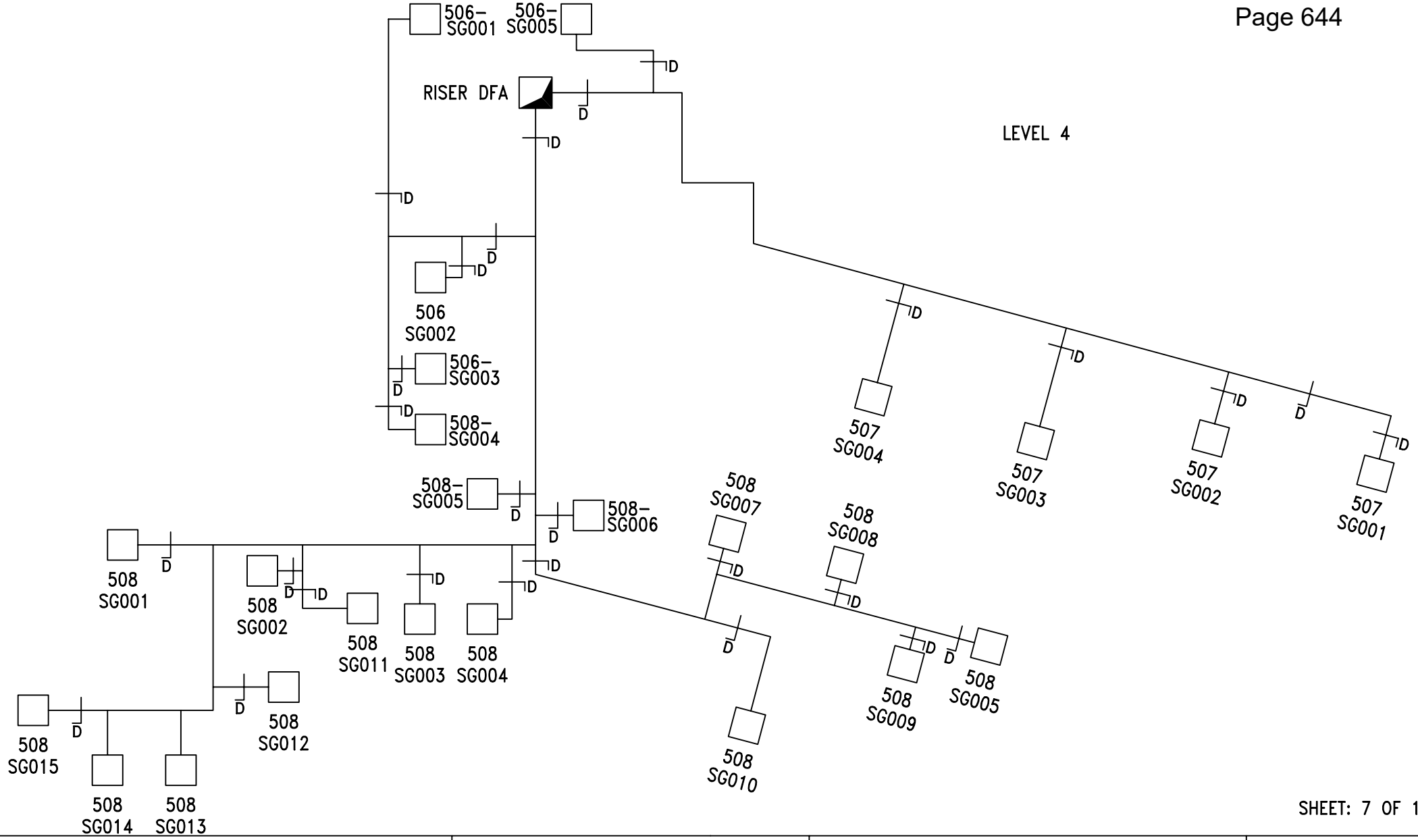

SHEET: 7 OF 14

H&V Commissioning Services Limited **Kilknowe Office** **16 Barrmill Road** **Galston** **East Ayrshire, KA4 8HH** **Tel : 01563 821991** **Fax: 01563 822220 email: talk2us@handv.co.uk**	**CONTRACT:** **NSGH, ADULT & CHILDREN'S HOSPITAL - PLANTROOM 123** **CLIENT:** **MERCURY ENGINEERING UK**	**TITLE:** **SCHEMATIC LAYOUT OF** **123-AHU06 SUPPLY (4TH-7TH FLOOR WARDS) LEVEL 4**	**DRAWN:** LH/DG **DATE:** 21/01/15 **DRG. No.:** 5902/V30

A49618320

H & V
H & V
H & V

Commissioning Services Ltd

EST: 1975

Kilknowe Office,
16 Barrmill Road,
Galston,
Ayrshire, KA48HH.
TEL N°. 01563 821991
FAX N°. 01563 822220
E-Mail: talk2us@handv.co.uk

CONTRACT: NSGH, ADULT & CHILDRENS HOSPITAL – PLANTROOM 123

GRILLE TEST SHEET **SYSTEM: 123 – AHU 06 SUPPLY (4TH TO 7TH FLOOR WARDS)**

LEVEL 5

Design Data		Initial Test Data		Final Test & Regulation Data		
Terminal or Ref No	Design Air Volume l/s	Balometer Initial Air Volume l/s	Balometer Final Air Volume l/s	Balometer Factor	Balometer Final Air Volume l/s	% Design
507-SG002	47	50	48	1.06	50.88	108
507-SG001	49	60	51	1.06	54.06	110
508-SG004	45	54	46	1.06	48.76	108
508-SG003	10	16	10	1.06	10.60	106
508-SG005	19	15	19	1.06	20.14	106
508-SG001	50	52	52	1.06	55.12	110
508-SG002	40	64	40	1.06	42.40	106
506-SG006	60	104	62	1.06	65.72	110
506-SG005	90	198	91	1.06	96.46	107
506-SG004	20	49	20	1.06	21.20	106
507-SG006	35	31	35	1.06	37.10	106
507-SG007	35	33	35	1.06	37.10	106
507-SG005	33	38	32	1.06	33.92	103
507-SG004	25	24	26	1.06	27.56	110
507-SG003	78	88	78	1.06	82.68	106
506-SG007	15	18	15	1.06	15.90	106
506-SG003	60	127	62	1.06	65.72	110

Remarks

Instrument Used: HV06/15

Date: 6/11/14	Engineer: Ross Parker & Daniel Kane	Sheet 8 of 14

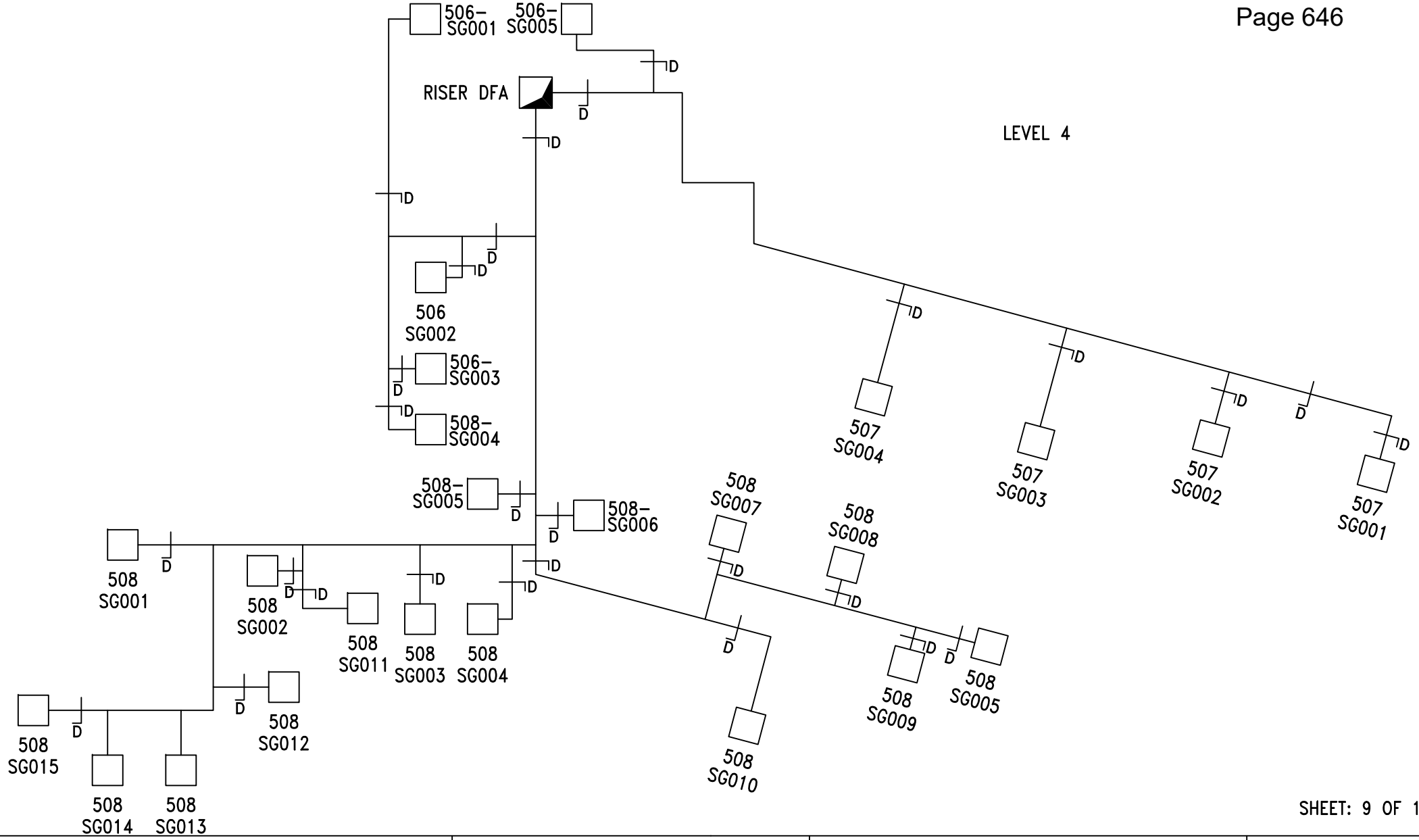

SHEET: 9 OF 14

H&V Commissioning Services Limited
Kilknowe Office
16 Barrmill Road
Galston
East Ayrshire, KA4 8HH
Tel : 01563 821991
Fax: 01563 822220 email: talk2us@handv.co.uk

A49618320

CONTRACT:
NSGH, ADULT & CHILDREN'S HOSPITAL - PLANTROOM 123

CLIENT:
MERCURY ENGINEERING UK

TITLE:
SCHEMATIC LAYOUT OF

123-AHU06 SUPPLY (4TH-7TH FLOOR WARDS) LEVEL 4

DRAWN: LH/DG

DATE: 21/01/15

DRG. No.: 5902/V30

H & V
H & V
H & V

Commissioning Services Ltd

EST: 1975

Kilknowe Office,
16 Barrmill Road,
Galston,
Ayrshire, KA48HH.
TEL N°. 01563 821991
FAX N°. 01563 822220
E-Mail: talk2us@handv.co.uk

CONTRACT: NSGH, ADULT & CHILDRENS HOSPITAL – PLANTROOM 123

GRILLE TEST SHEET **SYSTEM: 123 – AHU 06 SUPPLY (4TH TO 7TH FLOOR WARDS)**

LEVEL 6

Design Data		Initial Test Data		Final Test & Regulation Data		
Terminal or Ref No	Design Air Volume l/s	Balometer Initial Air Volume l/s	Balometer Final Air Volume l/s	Balometer Factor	Balometer Final Air Volume l/s	% Design
507-SG002	47	51	48	1.06	50.88	108
507-SG001	49	61	50	1.06	53.00	108
508-SG004	45	53	44	1.06	46.64	104
508-SG003	10	20	10	1.06	10.60	106
508-SG005	19	17	19	1.06	20.14	106
508-SG001	50	43	50	1.06	53.00	106
508-SG002	40	71	41	1.06	43.46	109
506-SG006	60	99	59	1.06	62.54	104
506-SG005	90	197	92	1.06	97.52	108
506-SG004	20	43	19	1.06	20.14	101
507-SG006	35	34	36	1.06	38.16	109
507-SG007	35	31	36	1.06	38.16	109
507-SG005	33	36	34	1.06	36.04	109
507-SG004	25	23	26	1.06	27.56	110
507-SG003	78	89	80	1.06	84.80	109
506-SG007	15	24	15	1.06	15.90	106
506-SG003	60	121	62	1.06	65.72	110

Remarks

Instrument Used: HV06/15

Date: 6/11/14	Engineer: Ross Parker & Daniel Kane	Sheet 10 of 14

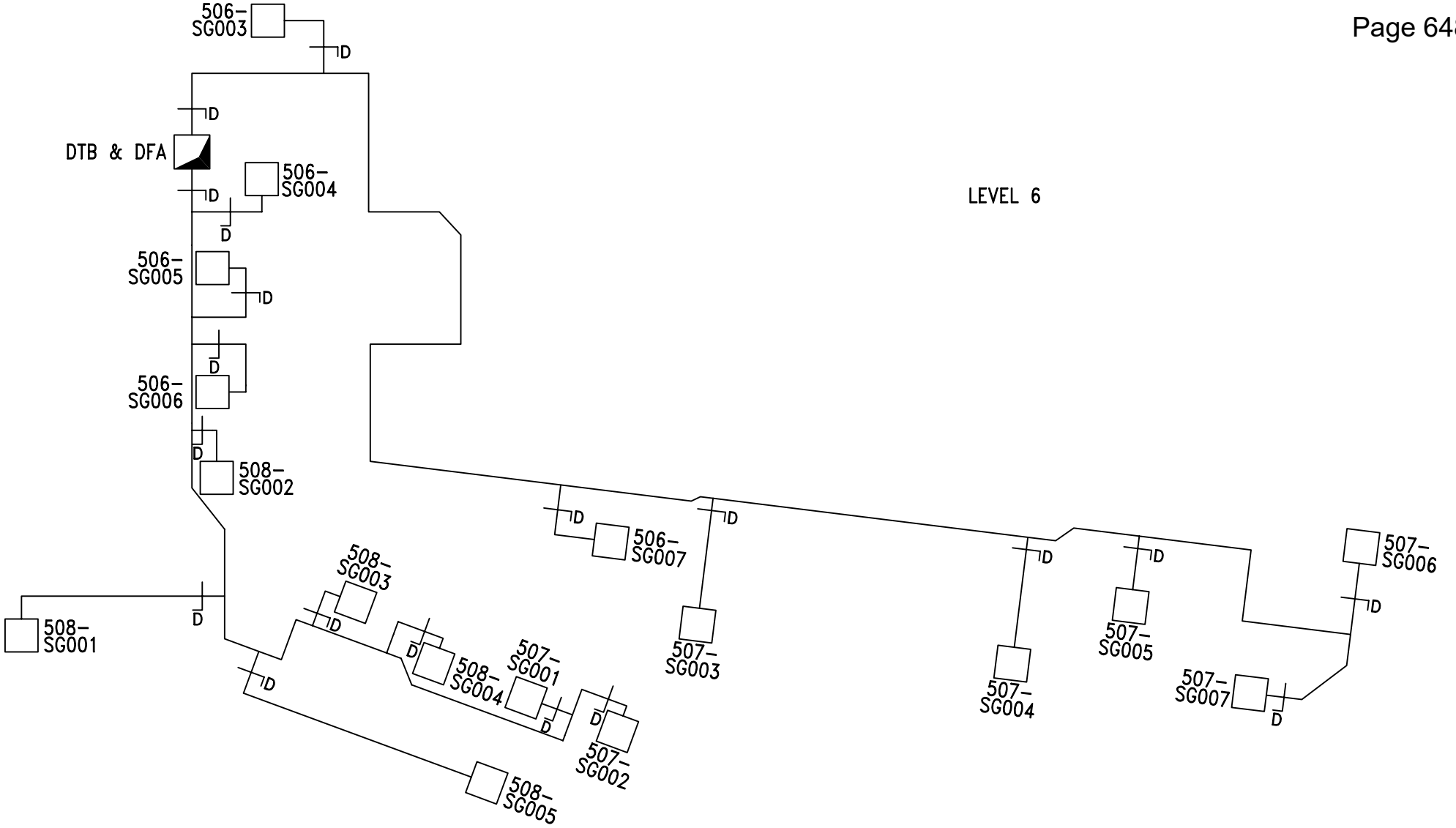

SHEET: 11 OF 14

H&V Commissioning Services Limited
Kilknowe Office
16 Barrmill Road
Galston
East Ayrshire, KA4 8HH
Tel : 01563 821991
A49618320
Fax: 01563 822220 email: talk2us@handv.co.uk

CONTRACT:	**NSGH, ADULT & CHILDREN'S HOSPITAL - PLANTROOM 123**
CLIENT:	**MERCURY ENGINEERING UK**
TITLE:	**SCHEMATIC LAYOUT OF** **123-AHU06 SUPPLY (4TH-7TH FLOOR WARDS)**
DRAWN:	**LH/DG**
DATE:	**21/01/15**
DRG. No.:	**5902/V32**

H & V
H & V
H & V

Commissioning Services Ltd

EST: 1975

Kilknowe Office,
16 Barrmill Road,
Galston,
Ayrshire, KA48HH.
TEL N°. 01563 821991
FAX N°. 01563 822220
E-Mail: talk2us@handv.co.uk

CONTRACT: NSGH, ADULT & CHILDRENS HOSPITAL – PLANTROOM 123

GRILLE TEST SHEET **SYSTEM: 123 – AHU 06 SUPPLY (4TH TO 7TH FLOOR WARDS)**

LEVEL 7

Design Data		Initial Test Data		Final Test & Regulation Data		
Terminal or Ref No	Design Air Volume l/s	Balometer Initial Air Volume l/s	Balometer Final Air Volume l/s	Balometer Factor	Balometer Final Air Volume l/s	% Design
507-SG002	47	56	47	1.06	49.82	106
507-SG001	49	57	49	1.06	51.94	106
508-SG004	45	65	46	1.06	48.76	108
508-SG003	10	20	10	1.06	10.60	106
508-SG005	19	19	19	1.06	20.14	106
508-SG001	50	59	50	1.06	53.00	106
508-SG002	40	56	40	1.06	42.40	106
506-SG006	60	90	62	1.06	65.72	110
506-SG005	90	136	93	1.06	98.58	110
506-SG004	20	49	20	1.06	21.20	106
507-SG006	35	30	36	1.06	38.16	109
507-SG007	35	25	36	1.06	38.16	109
507-SG005	33	33	34	1.06	36.04	109
507-SG004	25	18	26	1.06	27.56	110
507-SG003	78	71	81	1.06	85.86	110
506-SG007	15	19	15	1.06	15.90	106
506-SG003	60	115	62	1.06	65.72	110

Remarks

Instrument Used: HV06/15

Date: 6/11/14	Engineer: Ross Parker & Daniel Kane	Sheet 12 of 14

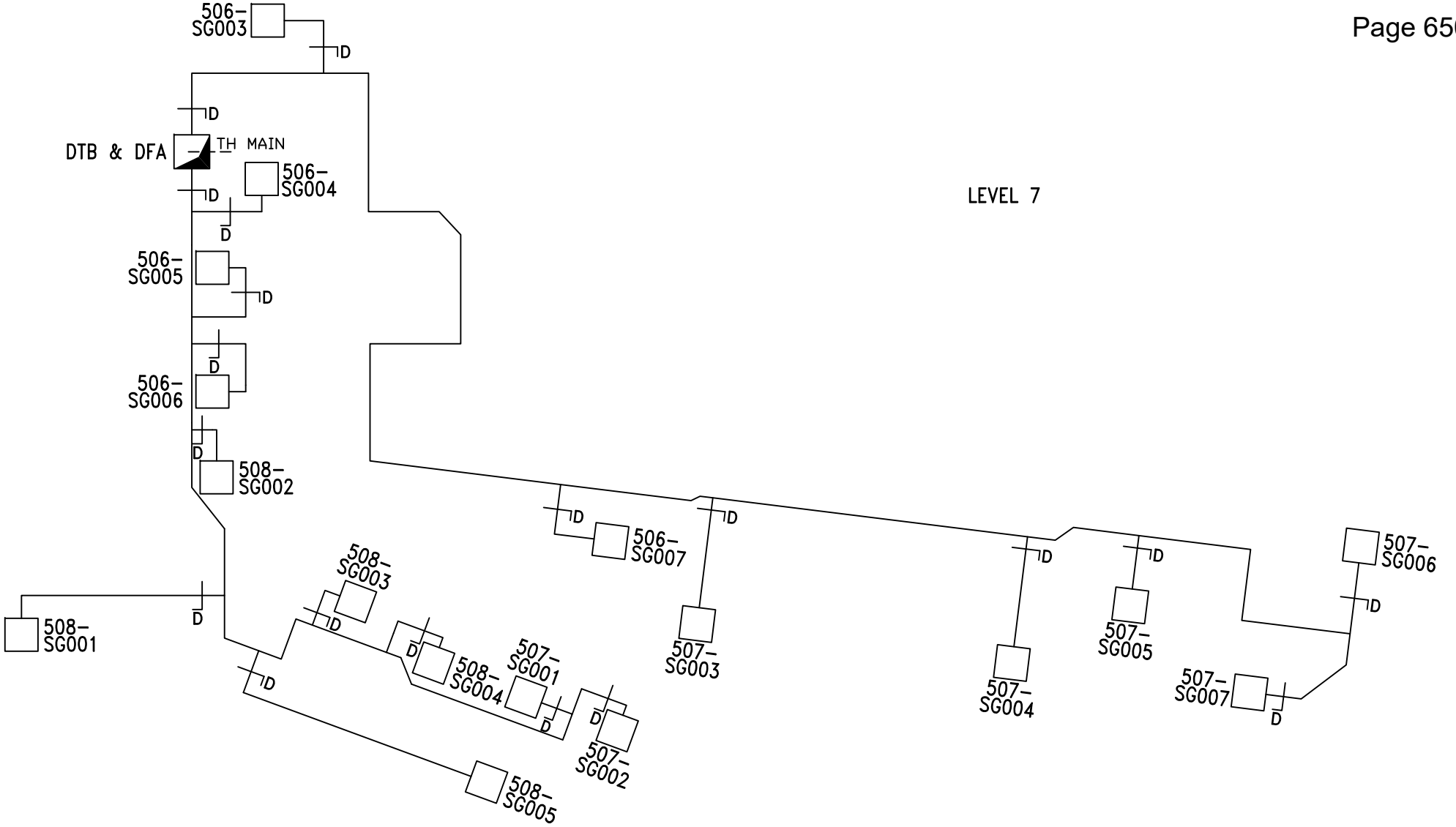

SHEET: 13 OF 14

H&V Commissioning Services Limited
Kilknowe Office
16 Barrmill Road
Galston
East Ayrshire, KA4 8HH
Tel : 01563 821991
Fax: 01563 822220 email: talk2us@handv.co.uk

A49618320

CONTRACT:
NSGH, ADULT & CHILDREN'S HOSPITAL - PLANTROOM 123

CLIENT:
MERCURY ENGINEERING UK

TITLE:
SCHEMATIC LAYOUT OF

123-AHU06 SUPPLY (4TH-7TH FLOOR WARDS)

DRAWN: LH/DG

DATE: 21/01/15

DRG. No.: 5902/V33

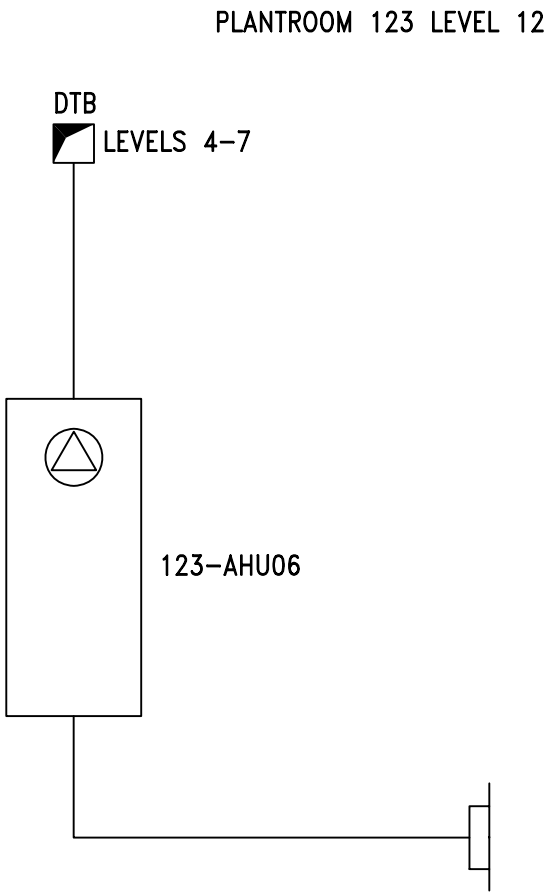

SHEET: 14 OF 14

H&V Commissioning Services Limited
Kilknowe Office
16 Barrmill Road
Galston
East Ayrshire, KA4 8HH
Tel : 01563 821991
Fax: 01563 822220 email: talk2us@handv.co.uk

A49618320

CONTRACT: NSGH, ADULT & CHILDREN'S HOSPITAL - PLANTROOM 123	TITLE: SCHEMATIC LAYOUT OF	DRAWN: LH/RP
		DATE: 20/01/15
CLIENT: MERCURY ENGINEERING UK	123-AHU 06 SUPPLY (4TH-7TH FLOOR WARDS)	DRG. No.: 5902/V34

H & V
H & V
H & V

Commissioning Services Ltd
EST: 1975

Kilknowe Office,
16 Barrmill Road,
Galston,
Ayrshire, KA48HH.
TEL N°. 01563 821991
FAX N°. 01563 822220
E-Mail: talk2us@handv.co.uk

CONTRACT: NSGH, ADULT & CHILDRENS HOSPITAL – PLANTROOM 123

SYSTEM: 123 - AHU 06 EXTRACT (4TH FLOOR WARDS)

WITNESSING OF TESTING AND BALANCING

	Client Representative / Commissioning Manager	Client
Witnessed By:	Julie Miller	
Representing:	Brookfield Multiplex	
Signature:	[redacted]	
Date:	15/1/15	
Witnessed By:		
Representing:		
Signature:		
Date:		

Remarks:

H & V
H & V
H & V

Commissioning Services Ltd
EST: 1975

Kilknowe Office,
16 Barrmill Road,
Galston,
Ayrshire, KA48HH.
TEL N°. 01563 821991
FAX N°. 01563 822220
E-Mail: talk2us@handv.co.uk

CONTRACT: NSGH, ADULT & CHILDRENS HOSPITAL – PLANTROOM 123

SYSTEM: 123 – AHU 06 EXTRACT (4TH TO 7TH FLOOR WARDS)

	AIR SYSTEMS PRE COMMISSIONING SHEET	✓	X	N/A
1.	Check AHU for damage and that all the components are secure	✓		
2.	Check the transit straps have been removed, if applicable	✓		
3.	Check pulleys are secure, tight, aligned and belts are correctly tensioned, if applicable	✓		
4.	Check with the controls engineer that the system is available to run and that plant rotation is correct	✓		
5.	Check all ductwork/air terminals are fitted and that air regulating dampers are open	✓		
6.	Check louvres are fitted and clear from obstructions, if applicable	✓		
7.	Check fire dampers are open, if applicable	✓		
8.	Check the motor overloads are suitable and set			✓
9.	Check VAV or CAV boxes are installed correctly and ready for use.			✓
10.	Check the floor plenums are complete, if applicable			✓
11.	Complete commissioning test sheets.	✓		

COMMENTS

H & V
H & V
H & V

Commissioning Services Ltd
EST: 1975

Kilknowe Office,
16 Barrmill Road,
Galston,
Ayshire, KA48HH.
TEL N°. 01563 821991
FAX N°. 01563 822220
E-Mail: talk2us@handv.co.uk

CONTRACT: NSGH, ADULT & CHILDRENS HOSPITAL – PLANTROOM 123

AHU TEST SHEET

SYSTEM: 123 – AHU 06 EXTRACT (4TH TO 7TH FLOOR WARDS)

AHU											
AHU Manufacturer			Barkell		Fan Size			400			
Fan Manufacturer			Comefri		AHU Serial No			No Detail			
Fan Type			Centrifugal		AHU Model N°.			TZAF 400 RFF			
			Design			**Test**				**% Design**	
Air Volume		(L/S)	1892			2068				109	
External Static Pressure		(Pa)	490		Inlet	344	Outlet	86	Total	430	
Fan Rotational Speed		(R.P.M)	1704			1704					
Filter Test Data	Pre Filter	(Pa)	Inlet	*	Outlet	*			ΔP	*25	
	Sec Filter	(Pa)	Inlet	N/A	Outlet	N/A			ΔP	N/A	

MOTOR			
Manufacturer	TEC	Output kW	2.2
Serial N°	1306-1197062	Motor Full Load Current	4.91 Amps
Voltage	400	Motor Running Current	4.3 Amps
	Design	**Test**	
Rotational Speed.	1445	1445	

DRIVE DETAILS				
Motor Pulley/Shaft Size (mm∅)	SPZ 125	28	Motor Pulley Taper Lock Size	1610
Fan Pulley/Shaft Size (mm∅)	SPZ 106	40	Fan Pulley Taper Lock Size	1610
Belt Type/Size	XPZ	950	N°. Of Belts	2
Shaft Centres mm	300		Adjustment	- 30 + 25 mm
Variable Speed Drive	Yes		Set Point	50 Hz

STANDBY PLANT						
Test Air Volume	2068	Inlet Pressure	344	Motor Rotational Speed	1445	Motor Running Current
% Design	109	Outlet Pressure	86	Fan Rotational Speed	1704	4.3 Amps
Variable Speed Drive			Yes	Set Point	50 Hz	

Comments. N/A – Not Applicable

2nd Motor Serial Number – 1306-1197105.

*Filter pressure taken from magnehelic gauge.

Instrument Used (Ref N°.) HV06/1, HV06/4, HV06/5

Date: 8/1/15	Engineer: Ross Parker & Daniel Kane	Sheet 3 of 14

H & V
H & V
H & V

Commissioning Services Ltd
EST: 1975

Kilknowe Office,
16 Barrmill Road,
Galston,
Ayshire, KA48HH.
TEL N°. 01563 821991
FAX N°. 01563 822220
E-Mail: talk2us@handv.co.uk

CONTRACT: NSGH, ADULT & CHILDRENS HOSPITAL – PLANTROOM 123

DUCT VOLUME TEST SHEET

SYSTEM: 123 – AHU 06 EXTRACT (4TH TO 7TH FLOOR WARDS)

VELOCITY PROFILE (taken facing air flow) **TEST HOLE LOCATION: PLANTROOM 123**

Test Hole Ref		Duct Dia (mm)		Duct Size (mm)		Duct Area		Design Air Volume		Design Air Velocity	
				Width x Height		M2		L/S		M/S	
Main TH				750	600	0.4500		1892		4.20	
3.90	4.50	4.60	4.50	4.40							
4.10	5.00	5.10	5.10	4.70							
4.60	4.90	5.00	5.10	4.70							
4.30	4.20	4.30	4.70	4.20							
Velocity Sub Totals											
16.90	18.60	19.00	19.40	18.00							

Total Velocity	Number of Readings	Average Velocity	Measured Air Volume	% Design	Static Pressure
M/S		M/S	L/S		Pa
91.9	20	4.60	2068	109	181

Remarks:

Instrument Used: HV06/1

Date: 8/1/15 | Engineer: Ross Parker & Daniel Kane | Sheet 4 of 14

H & V
H & V
H & V

Commissioning Services Ltd
EST: 1975

Kilknowe Office,
16 Barrmill Road,
Galston,
Ayshire, KA48HH.
TEL N°. 01563 821991
FAX N°. 01563 822220
E-Mail: talk2us@handv.co.uk

CONTRACT: NSGH, ADULT & CHILDRENS HOSPITAL – PLANTROOM 123

DUCT VOLUME TEST SHEET

SYSTEM: 123 – AHU 06 EXTRACT (4TH TO 7TH FLOOR WARDS)

VELOCITY PROFILE (taken facing air flow) **TEST HOLE LOCATION: CEILING VOID**

Test Hole Ref		Duct Dia (mm)		Duct Size (mm)		Duct Area		Design Air Volume		Design Air Velocity	
				Width x Height		M2		L/S		M/S	
TH1		150				0.0177		40		2.26	
2.30	2.30										
2.40	2.40										
2.30	2.40										
2.20	2.30										
Velocity Sub Totals											
9.20	9.40										

Total Velocity	Number of Readings	Average Velocity	Measured Air Volume	% Design	Static Pressure
M/S		M/S	L/S		Pa
18.6	8	2.33	41	103	10

Remarks: Serves Grille 4-508-EG001. Test Hole Volume 41 l/s ÷ Balometer Volume 36 l/s = 1.14 Factor.

Instrument Used: HV06/1

Date: 8/1/15 | Engineer: Ross Parker & Daniel Kane | Sheet 5 of 14

H & V
H & V
H & V

Commissioning Services Ltd

EST: 1975

Kilknowe Office,
16 Barrmill Road,
Galston,
Ayrshire, KA48HH.
TEL N°. 01563 821991
FAX N°. 01563 822220
E-Mail: talk2us@handv.co.uk

CONTRACT: NSGH, ADULT & CHILDRENS HOSPITAL – PLANTROOM 123

GRILLE TEST SHEET

SYSTEM: 123 – AHU 06 EXTRACT (4TH TO 7TH FLOOR WARDS)

LEVEL 4

Design Data		Initial Test Data		Final Test & Regulation Data		
Terminal or Ref No	Design Air Volume l/s	Balometer Initial Air Volume l/s	Balometer Final Air Volume l/s	Balometer Factor	Balometer Final Air Volume l/s	% Design
508-EG001	40	16	36	1.14	41.04	103
508-EG002	40	17	36	1.14	41.04	103
508-EG003	40	21	36	1.14	41.04	103
508-EG008	50	32	48	1.14	54.72	109
508-EG004	40	24	38	1.14	43.32	108
508-EG006	40	48	37	1.14	42.18	105
508-EG005	55	73	50	1.14	57.00	104
508-EG007	54	51	49	1.14	55.86	103
507-EG001	65	45	60	1.14	68.40	105
506-EG001	21	21	19	1.14	21.66	103
506-EG002	50	104	47	1.14	53.58	107
506-EG003	50	133	46	1.14	52.44	105

Remarks

Instrument Used: HV06/15

Date: 8/1/15	Engineer: Ross Parker & Daniel Kane	Sheet 6 of 14

LEVEL 4

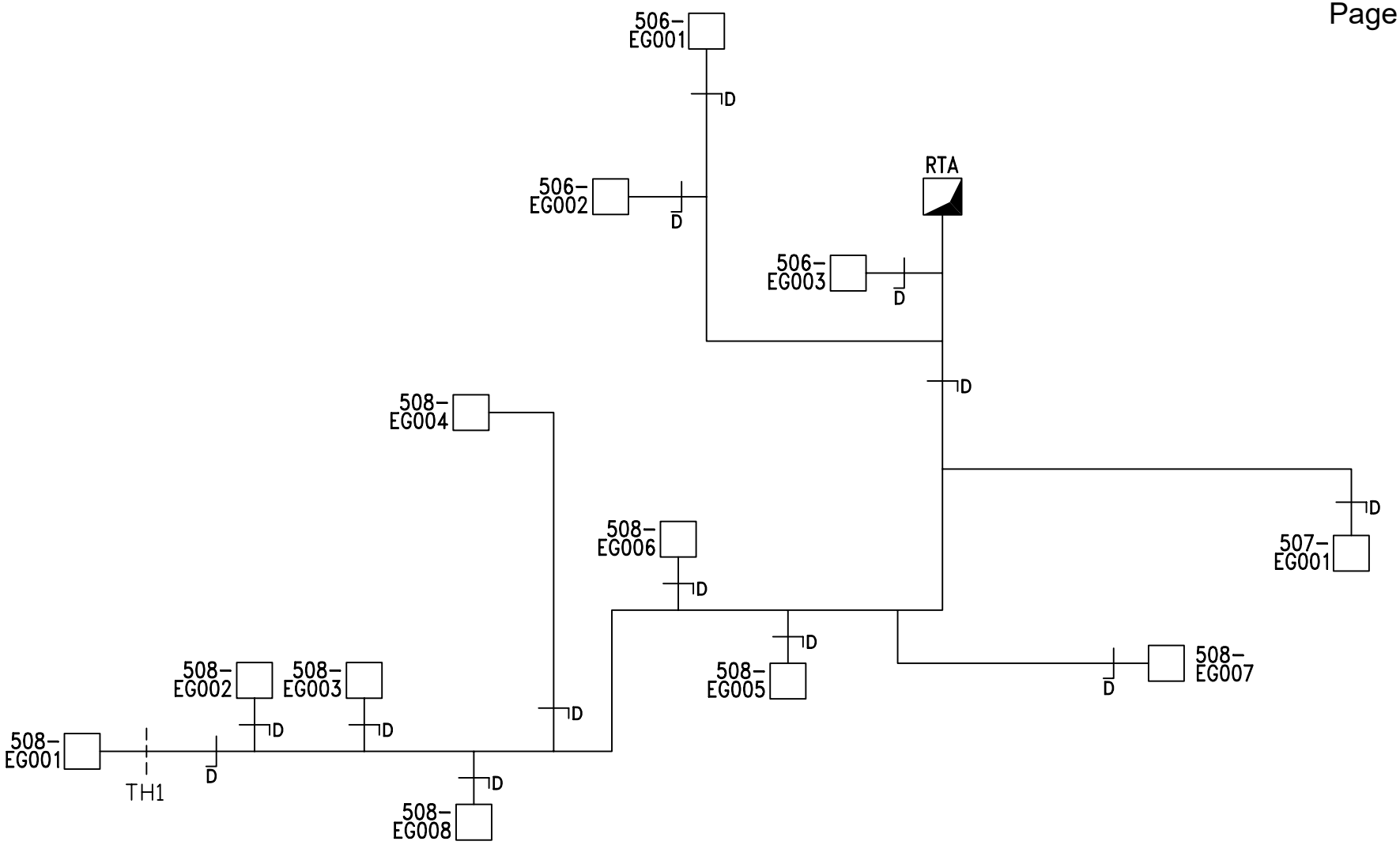

SHEET: 7 OF 14

H&V Commissioning Services Limited **Kilknowe Office** **16 Barrmill Road** **Galston** **East Ayrshire, KA4 8HH** **Tel : 01563 821991** **Fax: 01563 822220 email: talk2us@handv.co.uk**	**CONTRACT:** **NSGH, ADULT & CHILDREN'S HOSPITAL - PLANTROOM 123** **CLIENT:** **MERCURY ENGINEERING UK**	**TITLE:** **SCHEMATIC LAYOUT OF** **123-AHU 06 CLEAN EXTRACT (4TH-7TH FLOOR WARDS) LEVEL 4**	**DRAWN:** LH/DG **DATE:** 20/01/15 **DRG. No.:** 5902/V35

A49618320

H & V
H & V
H & V

Commissioning Services Ltd
EST: 1975

Kilknowe Office,
16 Barrmill Road,
Galston,
Ayrshire, KA48HH.
TEL N°. 01563 821991
FAX N°. 01563 822220
E-Mail: talk2us@handv.co.uk

CONTRACT: NSGH, ADULT & CHILDRENS HOSPITAL – PLANTROOM 123

GRILLE TEST SHEET

SYSTEM: 123 – AHU 06 EXTRACT (4TH TO 7TH FLOOR WARDS)

LEVEL 5

Design Data		Initial Test Data		Final Test & Regulation Data		
Terminal or Ref No	Design Air Volume l/s	Balometer Initial Air Volume l/s	Balometer Final Air Volume l/s	Balometer Factor	Balometer Final Air Volume l/s	% Design
507-EG002	150	107	133	1.14	151.62	101
507-EG001	65	60	58	1.14	66.12	102
508-EG001	54	77	51	1.14	58.14	108
506-EG004	60	90	54	1.14	61.56	103
506-EG003	90	172	80	1.14	91.20	101
506-EG002	20	51	18	1.14	20.52	103
506-EG001	10	12	9	1.14	10.26	103

Remarks

Instrument Used: HV06/15

Date: 8/1/15	Engineer: Ross Parker & Daniel Kane	Sheet 8 of 14

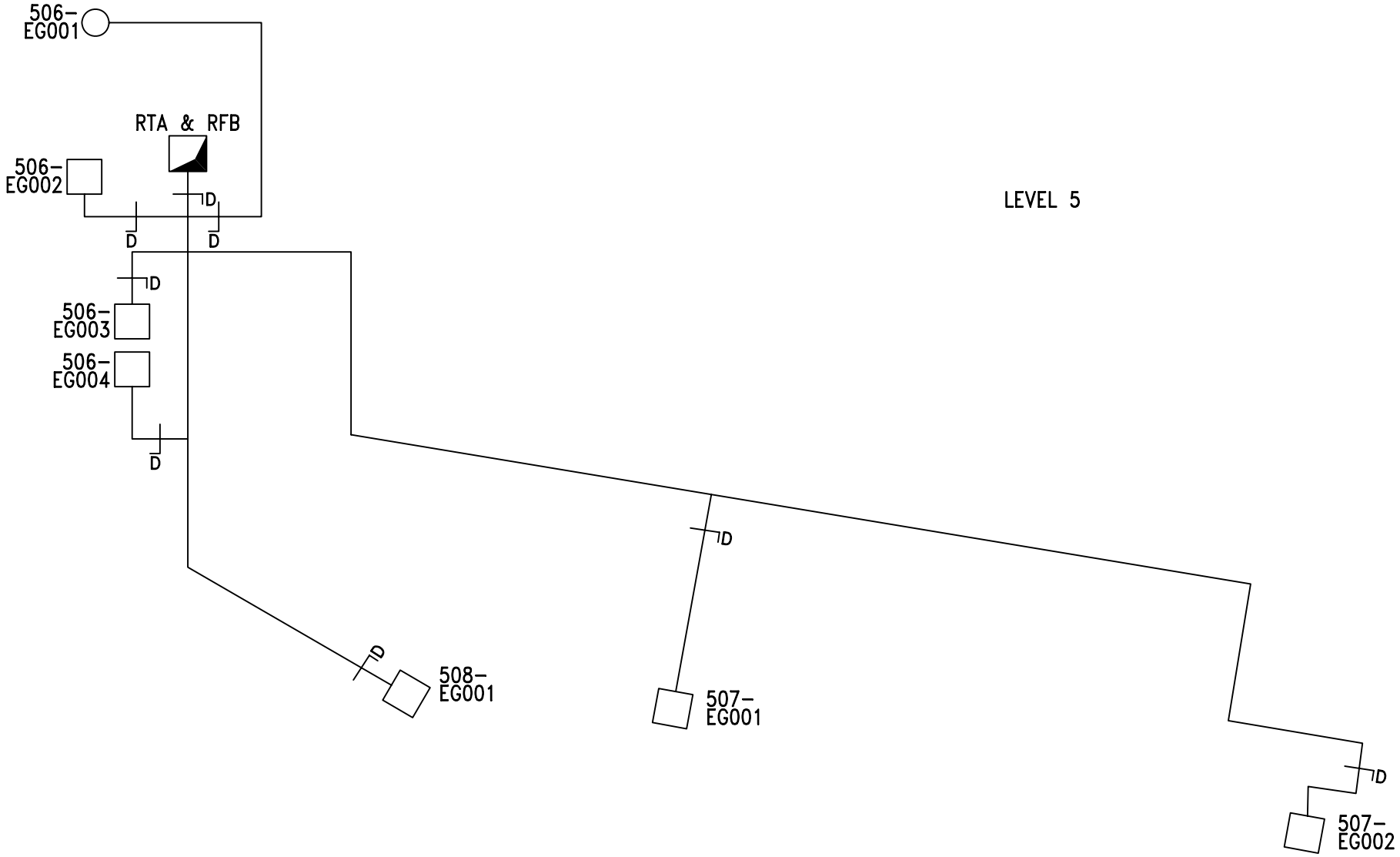

SHEET: 9 OF 14

H&V Commissioning Services Limited **Kilknowe Office** **16 Barrmill Road** **Galston** **East Ayrshire, KA4 8HH** **Tel : 01563 821991** **Fax: 01563 822220 email: talk2us@handv.co.uk**	**CONTRACT:** **NSGH, ADULT & CHILDREN'S HOSPITAL - PLANTROOM 123** **CLIENT:** **MERCURY ENGINEERING UK**	**TITLE:** **SCHEMATIC LAYOUT OF** **123-AHU 06 EXTRACT (4TH-7TH FLOOR WARDS)**	**DRAWN:** LH/DG **DATE:** 20/01/15 **DRG. No.:** 5902/V37

A49618320

H & V
H & V
H & V

Commissioning Services Ltd
EST: 1975

Kilknowe Office,
16 Barrmill Road,
Galston,
Ayrshire, KA48HH.
TEL N°. 01563 821991
FAX N°. 01563 822220
E-Mail: talk2us@handv.co.uk

CONTRACT: NSGH, ADULT & CHILDRENS HOSPITAL – PLANTROOM 123

GRILLE TEST SHEET

SYSTEM: 123 – AHU 06 EXTRACT (4TH TO 7TH FLOOR WARDS)

LEVEL 6

Design Data		Initial Test Data		Final Test & Regulation Data		
Terminal or Ref No	Design Air Volume l/s	Balometer Initial Air Volume l/s	Balometer Final Air Volume l/s	Balometer Factor	Balometer Final Air Volume l/s	% Design
507-EG002	150	100	132	1.14	150.48	100
507-EG001	65	55	58	1.14	66.12	102
508-EG001	54	69	48	1.14	54.72	101
506-EG004	60	85	55	1.14	62.70	105
506-EG003	90	173	81	1.14	92.34	103
506-EG002	20	54	18	1.14	20.52	103
506-EG001	10	9	9	1.14	10.26	103

Remarks

Instrument Used: HV06/15

Date: 8/1/15	Engineer: Ross Parker & Daniel Kane	Sheet 10 of 14

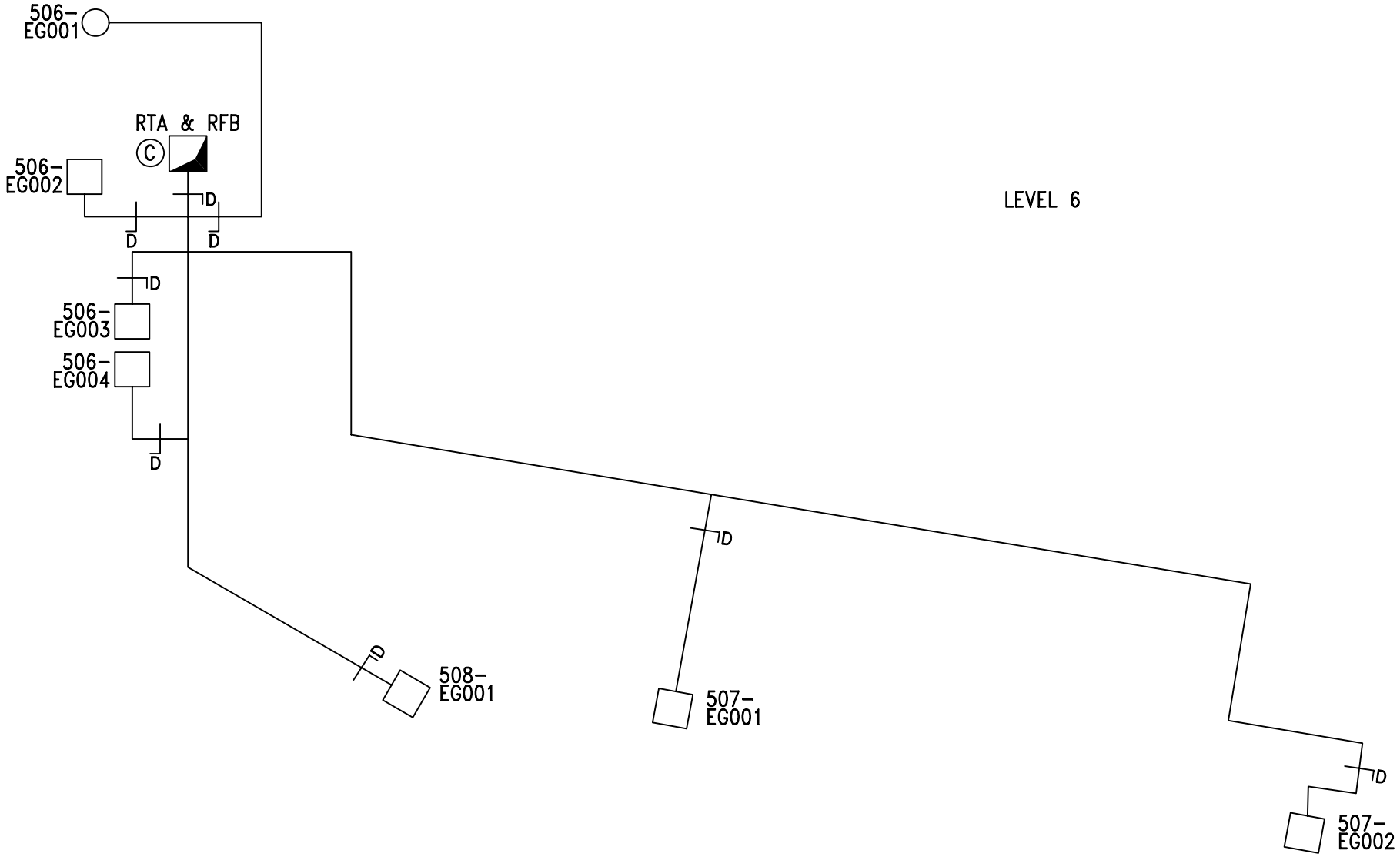

LEVEL 6

SHEET: 11 OF 14

H&V Commissioning Services Limited
Kilknowe Office
16 Barrmill Road
Galston
East Ayrshire, KA4 8HH
Tel : 01563 821991
A49618320
Fax: 01563 822220 email: talk2us@handv.co.uk

CONTRACT:	**NSGH, ADULT & CHILDREN'S HOSPITAL - PLANTROOM 123**
CLIENT:	**MERCURY ENGINEERING UK**
TITLE:	**SCHEMATIC LAYOUT OF 123-AHU 06 EXTRACT (4TH-7TH FLOOR WARDS)**
DRAWN:	**LH/DG**
DATE:	**20/01/15**
DRG. No.:	**5902/V38**

H & V
H & V
H & V

Commissioning Services Ltd

EST: 1975

Kilknowe Office,
16 Barrmill Road,
Galston,
Ayrshire, KA48HH.
TEL N°. 01563 821991
FAX N°. 01563 822220
E-Mail: talk2us@handv.co.uk

CONTRACT: NSGH, ADULT & CHILDRENS HOSPITAL – PLANTROOM 123

GRILLE TEST SHEET

SYSTEM: 123 – AHU 06 EXTRACT (4TH TO 7TH FLOOR WARDS)

LEVEL 7

Design Data		Initial Test Data		Final Test & Regulation Data		
Terminal or Ref No	Design Air Volume l/s	Balometer Initial Air Volume l/s	Balometer Final Air Volume l/s	Balometer Factor	Balometer Final Air Volume l/s	% Design
507-EG002	150	90	138	1.14	157.32	105
507-EG001	65	52	60	1.14	68.40	105
508-EG001	54	69	50	1.14	57.00	106
506-EG004	60	97	54	1.14	61.56	103
506-EG003	90	156	81	1.14	92.34	103
506-EG002	20	56	19	1.14	21.66	108
506-EG001	10	18	9	1.14	10.26	103

Remarks

Instrument Used: HV06/15

Date: 8/1/14	Engineer: Ross Parker & Daniel Kane	Sheet 12 of 14

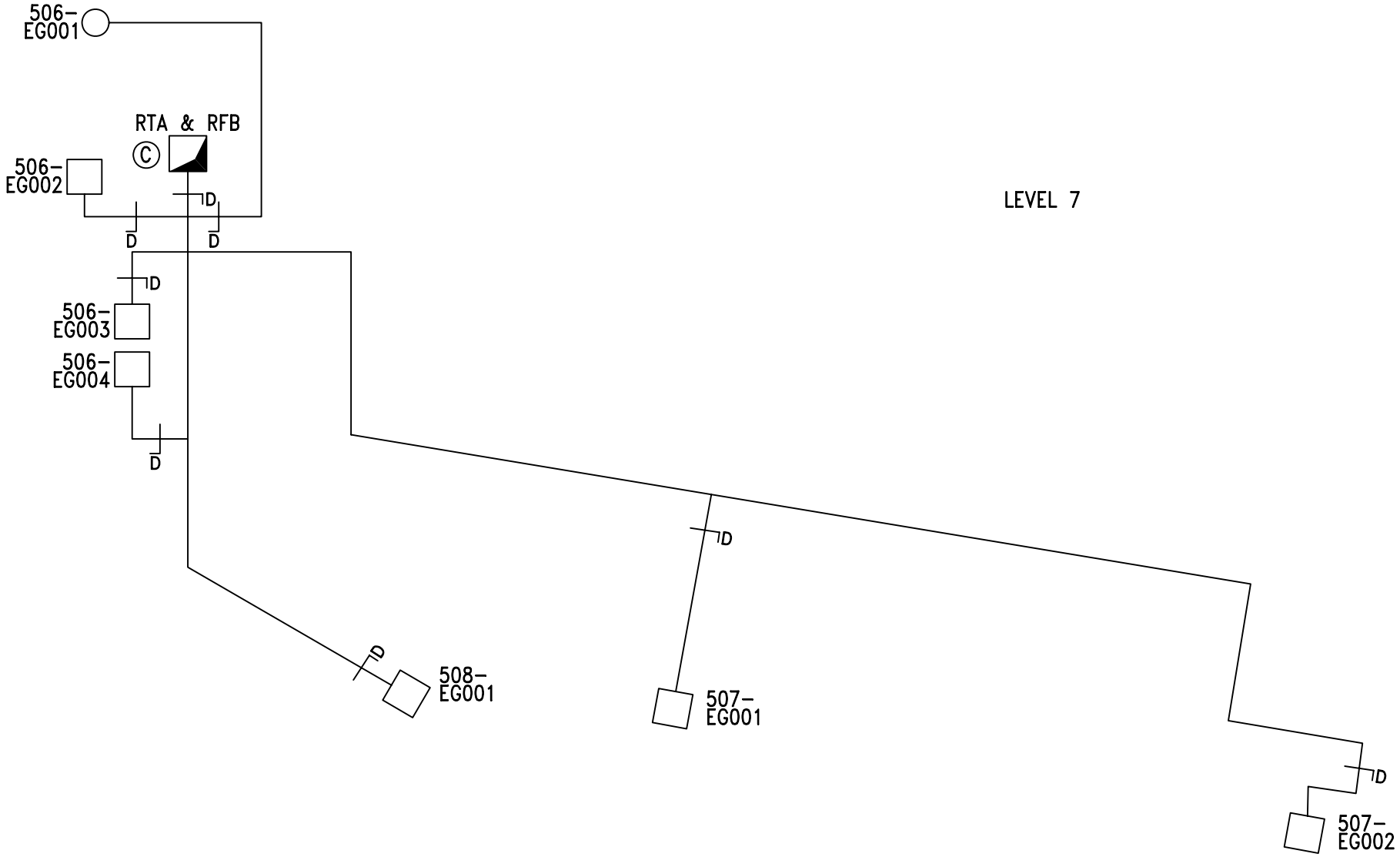

SHEET: 13 OF 14

H&V Commissioning Services Limited **Kilknowe Office** **16 Barrmill Road** **Galston** **East Ayrshire, KA4 8HH** **Tel : 01563 821991** **Fax: 01563 822220 email: talk2us@handv.co.uk**	**CONTRACT:** **NSGH, ADULT & CHILDREN'S HOSPITAL - PLANTROOM 123** **CLIENT:** **MERCURY ENGINEERING UK**	**TITLE:** **SCHEMATIC LAYOUT OF** **123-AHU 06 EXTRACT (4TH-7TH FLOOR WARDS)**	**DRAWN:** LH/DG **DATE:** 20/01/15 **DRG. No.:** 5902/V39

A49618320

PLANTROOM 123 LEVEL 12

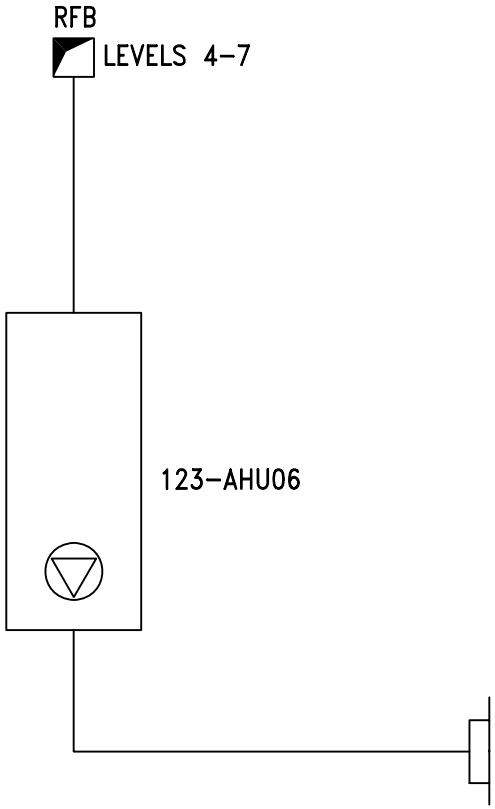

SHEET: 14 OF 14

H&V Commissioning Services Limited
Kilknowe Office
16 Barrmill Road
Galston
East Ayrshire, KA4 8HH
Tel : 01563 821991
A49618320
Fax: 01563 822220 email: talk2us@handv.co.uk

CONTRACT:
NSGH, ADULT & CHILDREN'S HOSPITAL - PLANTROOM 123

CLIENT:
MERCURY ENGINEERING UK

TITLE:
SCHEMATIC LAYOUT OF

123-AHU 06 EXTRACT (4TH-7TH FLOOR WARDS)

DRAWN: LH/RP

DATE: 20/01/15

DRG. No.: 5902/V36

New Southern General Hospitals

Compensation Event #10675

Status: Closed

Notification

Notified By

GGC01.NSGLP.pmoir on 2 Oct 2013

Notified To

BCL01

Proposed CE?

No

Under Dispute?

No

Type

60.1(1)-Change to the Works Information

Title

CE 051. Adult Hospital - Level 4 Zones 512, 513 & 514 HEPA Filtration

Description

The Board confirm acceptance of proposals set out in PMI 228 and confirm the design and adaptations to this are should be taken forward and incorporated into the finished building by the contract completion date for Stage 3. The agreed value for these works is £569,001.49 excluding VAT.

Reply By

23 Oct 2013

Decision

Request to submit quotation

Quotation Request Assumptions

The agreed value for the works is £569,001.49 ex.VAT

Quotation #1

Proposed Cost

£569001.49

Link to Quotation Document

N/A

Accepted Programme affected?

No

Delay to the Completion Date?

No

Delay to a Key Date?

No

Alteration to Accepted Programme?

No

Altered Programme Document

N/A

This document states the correct information at time of production (2016/1/25 17:47).
Content is subject to change at any moment in time and cannot be used as evidence of current information. Sypro takes no responsibility for out of date information.

Quote Response Assumption

N/A

Reply By

16 Oct 2013

Outcome

An acceptance of a quotation

Outcome Comments

N/A

This document states the correct information at time of production (2016/1/25 17:47).
Content is subject to change at any moment in time and cannot be used as evidence of current information. Sypro takes no responsibility for out of date information.

QUEEN ELIZABETH UNIVERSITY HOSPITAL – HAEMATO-ONCOLOGY WARD, LEVEL 4
BRIEFING NOTE ON DESIGN OF UNIT

1.0 BOARD'S REQUIREMENTS

The requirements are set out in the following documents;

- Clinical output specification for Haemato-oncology
- SHPN 054 Facilities for Cancer Centres
- SHTM 03-01 Ventilation for Healthcare Premises

In summary, the above documents collectively set the following design parameters; a sealed room, HEPA filtration, single rooms to have positive pressure from rest of hospital and an enhanced air change rate.

Compensation event No.051 was issued on 2nd October 2013 and instructed that an additional number of rooms, that were then in the Renal Ward, should be built to the same specification as those in the Haemato-oncology Ward. There was no detail within the change control form, from the service, to suggest that these rooms should be anything more than HEPA filtered and built to same standard as the 10 planned Haemato-oncology rooms.

2.0 DESIGN DEVELOPMENT

Designs for the department were developed based on a single room with en-suite, the model used elsewhere in the hospital, in other words individual lobbied rooms were not a user requirement. Designs were developed during the Phase 2 design development process in 2010 by the NHS user team, NHS Project Team, Brookfield Multiplex(BM) and their design team. It is not clear as yet where design assumptions were made that did not include all elements of the Board's specification noted above; and this is the subject of a review being undertaken by the BM design team.

What is clear, a design was concluded for the ward that did not meet all the requirements/recommendations and this progressed through to construction on site.

3.0 WHAT HAS BEEN BUILT

The rooms as constructed meet a range of the Board's design requirements, sealed external window, no chilled beam, HEPA filtration, positive pressured room, air system supplying 6 air changes per hour. The key design issue that appears to be affecting the operation of the air system and the high particle count is that the ceiling is not sealed. This is probably not allowing the air handling plant to reach its desired room pressure due to leakage into the ceiling void, and particles may transfer from this void into the room via loose fitting tiles or through the doorway when open due to drop in room pressure.

4.0 COMMISSIONING

The ventilation system serving the ward has been commissioned in accordance with CIBSE Commissioning Code A and the design air flow rate (based on 6ac/h). Thereafter sample room pressures were checked to confirm a positive differential pressure between the bedrooms and the corridor (generally 3-4Pa). The differential pressure was also checked between the ward exits and the cores / corridors again to ensure positive pressure (generally 1.5-2.5Pa). HEPA Filters were installed within all the bedrooms and visually checked to ensure seals were sound.

The Supervisor's (Capita) scope of work does not include design, build, commissioning and validation. The overall role of the Supervisor is to witness or carry out tests and inspections. The Supervisor also notifies Defects but may not accept a defect. The Supervisor is required to ensure that the works are provided to the standard and performance required in the works information. The works information for this ward was the Construction Issue drawings and specification which, as we now know, had short comings.

5.0 OPTIONS FOR SOLUTION

5.1 Testing Existing Installation

The Brookfield Multiplex team will undertake testing over the next 7 days, and will carry out a validation test (Air flow and static differential pressure test) on the rooms as they currently sit.

They intend to test 3 of the rooms with regards what can be achieved by sealing the rooms.

- Room 1 - seal the perimeter,
- Room 2 - seal the perimeter and the tiles
- Room 3 - we have ordered an alternative ceiling grid system which will confirm delivery of shortly. This is a manufactured self-sealing system (commonly found in theaters and CAT III rooms)
- All Rooms - adjust AHU performance to ensure optimal output
- All Rooms - install IP44 diffusers to light fittings

A further test will be taken at this point to understand the benefits of carrying this out (air flow and static differential pressure test).

We would require the Board to carry out a deep/clinical clean of the three rooms to allow a particle count to be taken at this time and we would like this to be undertaken by the Board's Infection Control team.

The purpose of the feasibility study is to establish the optimal position we can achieve with the currently installed services. Should test results meet the Boards requirements this would lead to minimal disruption and necessity of works (reducing the time the ward is rendered unavailable). At this time, should we achieve acceptable outputs we would present a formal submission to the NHS for agreement/approval, and this will need to include all design criteria on which the finished works would be measured by. Should all parties agree this will close the issue.

5.2 Alter Existing Installation

In carrying out the testing regime proposed above we will have a joint understanding of the capacity currently available with the installed system. The tests we are proposing are carried out (both by BMCE and the NHS) will provide information that will allow consideration to be given to the actual clinical performance of the rooms tested. Should an acceptable performance level be achieved we would carry out the following:

- Empty the rooms of all Board equipment to an agreed storage area.
- Remove the existing ceilings and services.
- Clean ductwork

- Install the new style sealed ceiling and replace the services as required dependent on test results.
- Decoration and making good to be carried out, builders clean and inspections.
- Replace HEPA filters and carry out challenge (DOP) testing
- Final deep/clinical clean and air particle count (By the Board)

This less invasive solution could be carried out in the region of 6 weeks construction time and has an overall duration of between 8 to 10 weeks depending on sign off and procurement.

5.3 **What else will Brookfield Multiplex be doing - Full Change Option**

We will over the next 2 weeks carry out a feasibility study on increasing the performance of the ward beyond what the currently installed services/building fabric can provide.

During this period we will consider alterations that would be required, including design review of :-

- Duct size
- Plant capability, Air Handling Units, heater batteries and Fans
- Room pressure monitoring
- Spatial constraints for duct work alterations and maintenance requirements in sealed rooms
- Access Maintenance
- Fabric/Lighting/seals

Subsequent to approval/agreement, to minimise the programme, we will progress to a full design while also progressing the procurement of materials on longer lead in times. We understand items to be on a 4 to 6 week lead in period and will express these for best delivery dates. This will take a further 3 weeks including the time for the Board to sign off design.

We would anticipate that to this point 5 weeks will be required.

To achieve a 10 air changes per hour, we anticipate a full strip out of the existing mechanical ventilation system and upgrade of the air handling units which we would be unlikely to install and complete in less than 5 or 6 months from design to completion and tested.

5.4 Why has this happened?

Brookfield Multiplex is reviewing the information set out in the employers requirements associated with the Ward and what specification the design was developed to.

Scottish Hospitals Inquiry - Request for information 20 March 2024

(RFI 25) – Deadline 13 April 2024

1. All Patient Placement Standard Operating Procedures (SOPS) applicable in QEUH/RHCYP between 2015 and 2024

The following SOPs and guidance document have been submitted with this response:

- IPC Patient Placement SOP V2 Final
- Patient Placement SOP V1.5 (May 20)
- Patient-Placement-Guidance-V3
- CDI (adults) SOP V7 (amended Aug 20) (Current).doc
- CDI (adults) SOP V7 (amended Jan 22).doc
- CDI (adults) SOP V8 (amended Nov 22).doc
- CDI Policy V5 May 2015.docx
- Influenza Guidance V6 (amended Nov 21).doc
- Influenza Guidance V7 (Amended Aug 22).docx
- Influenza Guidance V7 (Amended Nov 22).docx
- Influenza Policy V4.doc
- Influenza SOP Final January 2018.doc
- Influenza SOP Final July 2017.doc
- IPC Patient Placement SOP V2 Final.pdf
- Patient Placement SOP V1.5 (May 20).pdf
- Patient-Placement-Guidance-V3.pdf
- SOP TB v5 - JUL 2017 (aide memoire added Nov 17) 14 05 18 PJ and KH.docx
- sop-tb-interim-v7-10 08 18.docx
- TB Guidance V9 (amended Aug 22).docx
- TB Guidance V9 (amended Nov 21).docx

Questions 1-4 cover a significant period of time in respect of which both the nature of records and record-keeping processes have changed materially. Notably, records from the earlier part of this time period are most likely in hard copy and, where still held by NHSGGC, are stored in various archive facilities. As such, extensive archive searching is required to seek to locate the requested documentation. It has not been possible to complete an exhaustive search in the time provided. NHSGGC is continuing to search for any documentation relevant to these questions and will submit to the Inquiry, should this be located.

2. In the absence of SOPs, all written guidance applicable to patient placement in QEUH/RHCYP between 2015 and 2024

See response above.

3. **All Patient Placement Standard Operating Procedures applicable to the Brownlee Unit from its opening in 1998 until its transfer of the Infectious Disease Unit to the QEUH in July 2015.**

   See response above.

4. **In the absence of SOPs, all written guidance applicable to patient placement in the Brownlee Unit from its opening in 1998 until its transfer to the Infectious Disease Unit in July 2015.**

   See response above.

5. **A list of all diseases for which patients were treated by the Infectious Diseases Department at the Brownlee Unit from opening to transfer of the Infectious Disease Unit to the QEUH, including confirmation of whether "high consequence" diseases were treated at the Brownlee Unit.**

   An Infectious Diseases Clinician within NHSGGC has advised that it is not possible to answer this question comprehensively, due in part to the historic management of patient records, which would not have been stored on electronic databases, therefore an overview of common infections is provided.

   The Brownlee Unit at Gartnavel General Hospital was known to have treated as inpatients those with HIV/AIDS, and multiple other infectious and tropical diseases, including tuberculosis.

   There was a definite case of Crimean Congo Haemorrhagic Fever treated in the Brownlee Unit, in 2012, before transfer to the Royal Free in London. (High consequence infectious disease)

   There was a definite case of Ebola in 2014 treated at the Brownlee Unit, before transfer to the Royal Free in London. (High consequence infectious disease)

   There have been many cases of possible High Consequence Infectious Disease managed over the years but excluded after appropriate testing.

   There have been many instances of viral haemorrhagic fever; this is not categorised as a high consequence infectious disease.

   No Scottish cases of SARS or MERS were experienced before the move of the inpatient infectious diseases unit to the QEUH.

6. **The Clinical Output Specification for the Brownlee Unit.**

   Presently, despite extensive archive searching, we have not been able to locate the Clinical Output Specification. NHSGGC is continuing to conduct a search and will provide any relevant documentation, should this be located.

7. The Design Specification for the Brownlee Unit (including details on the ventilation strategy, air filtration, pressure ratings, air change rates, room pressure monitoring details, confirmation of ceiling types and finishes).

Presently, despite extensive archive searching, we have not been able to locate the Design Specification, or any records from the design period. NHSGGC is continuing to conduct a search and will provide any relevant documentation, should this be located.

The following details in respect of the ventilation, air filtration, pressure rating, air change rates, room pressure monitoring and ceilings in the unit are noted from the information currently available:

2015 onwards

The unit was altered in 2015 after the Infectious Disease service vacated. The description of works for the alterations to the system in 2015 state that redundant equipment was de-commissioned.

Pre-2015

NHSGGC has not identified records of air balancing, Air Change Rates, or room pressure monitoring details for the unit prior to 2015. An NHSGGC Infectious Diseases Clinician has advised that this was monitored using gauges outside each room by the ward manager. In the event of a substandard reading, Estates were contacted to review.

The following information has been ascertained from the as-built records.

There were 4 isolation “suites” which were all located together at one end of the unit. Each isolation suite had a lobby with supply air, a room with supply air and a HEPA filtered extract grille and each room had an en-suite with a HEPA filtered extract grille.

- The 4 rooms and adjoining lobbies were supplied from a common AHU which had a duty of 1.2m3/s.
- Each isolation room had a HEPA filtered extract grill which extracted air via a common unit. The unit had a duty of 1.074 m3/sec.
- Each en-suite had a HEPA filtered extract grille which extracted air via a common unit. The unit had a duty of 0.126m3/sec.

On review of the 2015 works description, and visual inspection on site in April 2024, NHSGGC’s position is that the ceilings were what is described as “solid” in that they were plasterboard and that they were not changed in 2015.

8. **In relation to the Brownlee Unit at opening and for the duration when operating as an Infectious Disease Unit a) 1) the number and 2) type (PPVL, NPIL, PPIL) of <u>isolation rooms</u> provided for infectious disease patients.**

   As -built records which have been located indicate that there were a total of 30 rooms. The plans included with this submission indicate that there were 3 rooms which accommodated 2 people and 27 single rooms, which included 4 isolation suites.

   Further information about the type of isolation room is not currently available. NHSGGC is continuing to conduct a search and will provide any additional relevant documentation, should this be located.

9. **In relation to the Brownlee Unit at opening and for the duration when operating as an Infectious Disease Unit a) 1) the number and 2) type (whether multibed or single) of other (non-isolation) rooms provided for infectious disease patients.**

   As-built records which have been located indicate that there were a total of 30 rooms. The plans included with this submission indicate that there were 3 rooms which accommodated 2 people and 27 single rooms, which included 4 isolation suites.

   The 27 single and multi-bedrooms (non-isolation) had general ventilation supply and extract to bedrooms and office areas.

   NHSGGC is continuing to conduct a search and will provide any additional relevant documentation, should this be located.

10. **Clinical Output Specification and Design Brief for transfer of the Brownlee Infectious Diseases Unit to the QEUH.**

    No Clinical Output Specification or Design Brief exists for the transfer of the inpatient infectious diseases' unit to the QEUH.

For note, the Inquiry have previously been provided with documentation relating to Infectious Diseases, including:

- An SBAR dated 26.04.2016 submitted under RFI 7 2.24.
- The 'microbiologists' SBAR', action plan and associated meetings submitted under RFI 7 4.1.

- The ‘Notice of Contravention’ section of RFI 1 5.1.

Wednesday 25 February 2015
at 1.30 pm

Meeting Room ADM 2.16B, Level 2, Victoria ACH

PRESENT

Chair	TW	Infection Control Manager
Tom Walsh		
Professor Craig Williams	CW	Co-ordinating Infection Control Doctor
Sandra McNamee	SMcN	Associate Nurse Director (Infection Control)
Ann Kerr	AK	Lead Nurse, Surveillance
Lynn Pritchard	LP	Lead Infection Control Nurse, South East
Susie Dodd	SD	Acting Lead Infection Control Nurse, North West
Joan Higgins	JH	Lead Infection Control Nurse, Clyde
Clare Mitchell	CM	Lead Infection Control Nurse, South West
Kate Hamilton	KH	Lead Infection Control Nurse, North East
Pamela Joannidis	PJ	Nurse Consultant, Infection Control
Dr Alison Balfour	AB	ICD, Partnerships
Dr Linda Bagrade	LB	ICD, Clyde
Dr Pauline Wright	PW	ICD, South
Dr Teresa Inkster	TI	ICD, North
Dr Christine Peters	CP	ICD, South
Dr Ursula Altmeyer	UA	Specialty Registrar

In Attendance

Ann Lang	(Minutes) PA Infection Control

Apologies Received
Professor Andrew Smith

Item	Action

1. Welcome & Apologies

Tom welcomed everyone to today's meeting. Apologies were received from the above mentioned.

MDR Gram Negatives

A presentation regarding MDR gram negatives was provided by Pauline. Discussion took place regarding actions to be taken forward and these included:-

- Antimicrobial stewardship reinforced
- Improved microbiological diagnostics
- Infection Control promoted
- Antibiotic development
- Consistent approach (MDTs useful)
- Resources: ward fabric /nursing / PT / OT / domestic staff / ICT / Microbiology lab
- Environmental screening
- TRAK ordering of CPE screen
- Electronic tagging of notes
- Care template for CPE colonised / infected patients
- Staff Q&A

Item	Action

2. Minutes of SMT Meeting held on 25 January 2015

The minutes of the previous SMT meeting held on 25 January 2015 were accepted with the following amendments:-

Page 4, Theatre Maintenance ...., – should read "..... Theatre L at GRI is being refurbished and will be reopening again",

Page 8, Item 20, 1st bullet point – should read "If a surgical site infection is the source of a SAB and the patient has had their surgery within GGC, this should be considered 'hospital acquired' for enhanced SAB surveillance reporting purposes".

Actions Update

Craig trying to obtain a copy of the new guidance on legionella.

With regards to prescribing Tamiflu Craig advised that he discussed this with Dr Raeside. In RAH Linda reported that they have reached local agreement in medical receiving that they are following guidelines but will need to risk assess the patient. She said that if the patient has other reasons for symptoms they are classed as low priority. Craig commented that the problem is also relating to the delay in receiving results. He said it is something possibly to look at with the winter planning group and look at the testing and isolation of patients for next season.

Discussion took place on when to close a ward with flu. Lead Nurses said they were following the same guidance as with norovirus. Pamela reported that it is difficult to determine if a patient came in with flu like symptoms and maybe need to define what HAI is for flu.

Craig reported that he spoke to the clinicians regarding patients with botulism.

STANDING ITEMS

3. Matters Arising

There were no matters arising that were not on the agenda.

4. Sector Update

i) Geographical Sector Update (encl)

The IC Sector Updates were distributed with agenda.

- **Clyde (Joan Higgins)**
  - In Clyde Joan reported that they have had 5 community acquired c-diff cases this month.
  - One ward in IRH has been closed with suspected norovirus. Also in Medical Receiving Joan advised that there were nine members of staff that have been off with diarrhoea since last Wednesday. The ward is being observed.
  - Sandra said that she has received a request, in light of the government review, for information regarding the number of MRSA, C-diff, SABs and SSI cases for RAH for the last year.

- North East (Kate Hamilton)
  - Kate reported 1 ward is closed with Influenza. She commented that there have been 30 plus cases on ICNET.
  - I severe CDI case was reported and Kate stated that a patient died and c-diff has been listed on Part 2 of the death certificate.
  - HEI Inspectors presented at GRI for an unannounced inspection yesterday.

Item	Action
• **North West (Susie Dodd)** • With regards to Influenza A Susie reported that a ward at GGH had closed but reopened yesterday. • In B2 Susie said that there are 4 cases of Influenza and the ward is being monitored. • At the VOL there have been 10 Influenza A patients in the Outpatient Dialysis Unit. Susie stated that some results are still outstanding and the ward remains open. • She informed of the large burden of Influenza and loose stool patients in the North West Sector. • **South East (Lynn Pritchard)** • Lynn reported of a CDI death in Mearnskirk Hospital that was listed in the GRO data. She said the patient tested positive in January and CDI was listed on Part 2 of the death certificate. A meeting has been arranged for tomorrow and Lynn said that she will ask why CDI was added to the death certificate. **South West (Clare Mitchell)** • Clare reported of a query MERS case at SGH. She advised that the patient came in with flu like symptoms and Brownlee was contacted but they had no beds that could take the patient. The patient was put into a single side room in Urology at SGH and no documentation was taken of the possible diagnosis of MERS. Clare also found it difficult to find anybody that had been fit tested with FFP3 masks as no staff were available from A&E or ITU. Craig asked if we should be promoting FFP3 masks. Sandra replied that the Board needs to make the decision and to determine whose responsibility it is. Tom agreed to raise this at the AICC meeting on Monday.	**TW**
5. HAIRT Report – February Update A copy of the HAIRT report for February was issued with the agenda and noted.	
6. Q&P HAI Report Nil to update.	
7. IC Implementation Plan Progress The IC Implementation Plan update for March was distributed with the agenda and Sandra provided an update. She reported that we are still waiting for a CNO letter from the Scottish Government clarifying the categories for SSI surveillance The new infection control audit is currently being tested and the work on the new build is ongoing. With regards to On the Move Sandra reported that there is little to update as we are still waiting for details on locations that are available. Alison noticed that on page 10 Sarah Whitehead's name is still listed under Central Decontamination Unit and Sandra confirmed that Sarah's name will be removed from the new plan.	

Item	Action
8. Sub-Groups/ Short Life Working Groups Update:	
i) Water Safety Group Craig advised that the last meeting of the group had been cancelled. Linda asked in relation to the engineer that is carrying out testing for legionella where do the results go. Craig stated that it may be appropriate to ask for an additional meeting of the group to take place. If anybody has any comments to let Craig or Pamela know so that they can raise these at the next meeting. The Water Safety Policy is due for renewal in March 2015 as Pamela advised that the policy was only valid for one year.	
ii) Theatre Maintenance & Management Group A copy of the new theatre audit tool has been issued and the Theatre Group is going to look at this. In relation to validation Estates Department and working on an escalation algorithm. Kate mentioned the temporary ventilation at GRI and commented that the theatre suites did not all need to close as they were able to close one unit at a time.	
iii) Infection Control Policy Group Pamela reported that the MRSA Policy was out for consultation. This is due to the request to change the screen to infected wounds instead of all wounds. Linda advised that they sometimes receive false negative results and Trakcare does not seem to recognise wounds. After discussion it was suggested to change the hairline screen to a wound screen for the MRSA screening. Craig said that he would raise this at the lab meeting arranged for tomorrow. With regards to the decolonisation regimen Craig reported that there is a difference between the policy and the PGDs. The agreement was to use this for 5 days as directed.	**CW**
iv) Education Group/OLM Workstream Lynn advised that the next OLM meeting is scheduled for tomorrow. The work of the IC education group is ongoing. Lynn reported that the IV medication presentation will be issued in the next two weeks and will be sent out for review. NES are going to look at the CDI module as they have received comments that the Learnpro module is too advanced. The Education Strategy was distributed with the agenda. Pamela advised that this had been updated in light of the recommendations from the Vale of Leven Inquiry. A recording template for Senior Charge Nurses to record training for their staff has been added.	
v) Decontamination Group Alison updated the group from the last Decontamination meeting. She said that the minutes of the Rinse Water Group are still to be circulated and the lancer cabinets were discussed. Kate advised that she will arrange a time to meet with Maureen to consider the content of the decontamination website.	

Item		Action
vi)	**Person Centred Care** Joan reported that the group met last week and looked over the results from the staff satisfaction survey. From the surveys received Joan stated that there were 195 comments and 87% of the comments related to the infection control audit that is carried out in the wards and how staff felt during this process. She said the group are concerned regarding the comments received and have arranged for a Focus Group to look into this. They are going to prepare 10 questions and pilot this with the senior charge nurses at RAH and also ask what the infection control teams can do to make this process easier. The Lead Nurses agreed that the senior charge nurses are concerned regarding the outcome of the audit result. Sandra and Pamela to raise the impact of the audit and the output on individual's clinical practice at the next Head of Nursing meeting.	**SMcN/ PJ**
vii)	**CPE Group** Craig confirmed that the CPE group will be reformed and he will discuss this at the AICC meeting on Monday.	**CW**
9.	**Project Update:**	
i)	**IT Project** Ann updated the group and advised that the user acceptance testing to facilitate the SSI module on ICNET was ongoing. She said there had been problems on ICNET with coding issues, no laboratory feeds and the system being down. With regards to Ortho Ann reported that theatre staff are not recording the codes correctly. A meeting has been arranged with Susan Groom and Tom, Sandra and Ann to discuss the coding issues with Susan. HPS had called a SSI meeting tomorrow but Ann reported that this had been cancelled. The Lead Nurses had met and agreed the extended properties for loose stools and Ann advised that this will help the data team to analyse the data better. Craig reported that in Ophthalmology we have done data link work and will take this forward to the Clinical Governance meeting. In relation to Craniotomies Craig suggested that this could be an opportunity to do surveillance on this and check the data quality. Ann replied that she is concerned as she only has two surveillance nurses to validate all the information. Tom explained that firstly we are waiting on guidance from Scottish Government notifying us of new mandatory surveillance priorities.	
ii)	**MRSA Screening / KPIs** Ann advised that from our local data we are 90% compliant and 69% compliant with overall swabbing. Craig mentioned that maybe we should let AICC know of the 90% compliant rate results.	

Item		Action
iii)	**SAB HEAT Target** With regards to SABs Ann reported that Quarter 4 will not be reported until April but she is hopeful that we should meet the target. As of today Ann advised that we have 24 SABs for the month of February. In clinical portal Ann commented that Ursula's documentation of a SAB patient was very good and hoped that all ICDs could replicate this. In relation to c-diff there are 20 cases for the month of February and our target is 32 cases. Craig reported that the PICC Working Group will be resuming again in spring and they will look at who has access to PICC lines. He said there seems to be a problem with the handover from patients from ITU to a ward and when to document when the line was inserted. It was agreed that this would be raised at the next Head of Nursing meeting for agreement when to start the care plan. Kate commented that she feels more education is required on wards regarding the CVC Care Plan.	**SMcN/ PJ**
iv)	**SICPs / SPE Audits** At a recent Head of Nursing meeting they approved the new audit tool and Pamela reported that she had met with Alastair McGown from HEI and he was happy with the new tool. She said that Symbiotix have been to the different sectors in Infection Control and the audit tool will be piloted in March with a start date of 1st April. On looking at the audit tool Kate commented that it did not really address outpatient areas and some of the sections will be non applicable for these areas. Pamela asked if there were any further comments to let her know.	
v)	**Transmission Based Precautions** The national guidance on Transmission Based Precautions is still being reviewed. Pamela reported that she, Craig and Sandra had met with clinical groups to discuss how to implement the policy. She said that they also approached HPS on behalf of GGC and the Infection Control Nurses network seeking advice and to clarify what they mean by AGP. Also if we should develop our own AGP appendix to the policy. Craig suggested that maybe we should discuss the issue with the FFP3 masks at AICC next week.	**CW**
vi)	**New Build – Adult Hospital / Children's Hospital** Adult Hospital Craig reported that discussions have been held regarding the Brownlee and Beatson moving to the new hospital and concern regarding the anterooms. He said that the clinicians seem happy with the rooms now. Children's Hospital The work in the children's hospital is ongoing and Craig advised that the BMT rooms are being looked at and he is hopeful that this will be closed off soon.	
10.	**Finance Report** Tom reported that we are slightly underspent in the budget and should be able to carry forward some spend.	

Item		Action
11.	**On The Move** With regards to office accommodation Tom advised that he has no further update. He said that there may be accommodation at Yorkhill Hospital for the staff that cannot move to the new hospital but this has not been confirmed. He said that Vale of Leven Hospital will sit in the West Sector and two wards from Mansion House Unit are being transferred to Dykebar Hospital. Clare asked for clarification what sector Mearnskirk will sit in and Tom confirmed that he will check this. From the recommendations of the Vale of Leven Inquiry Tom reported that one of the recommendations was for Infection Control to be a standing agenda item on directorate/sector governance meetings. The Board Infection Control Committee will be the sole place where all policies will be approved. He said that he has still to have discussions with Grant Archibald regarding Infection Control being on the agenda for the Acute Clinical Governance Committee. Craig suggested that we have a standardised template for committees to include e.g. number of c-diff and SAB cases. Tom said that he is preparing a draft structure for Dr Armstrong and once this has been agreed he will forward this to SMT.	**TW**
12.	**Clinical Governance Related Guidance** Copies of the latest Clinical Governance Related Guidance notes were issued with the agenda.	
	INFECTION CONTROL GOVERNANCE	
13.	**IC Official Responses (Complaints / FOIs / PQs / Legal Enquiries)** Kate advised that she is dealing with a request asking for historical MRSA information.	
14.	**Patient Experience / Person Centred Care** All information relating to Patient Experience is available on the Pan Glasgow drive. Pamela stated that she will issue a link to the Patient Opinion website which has responses from patients for all boards.	**PJ**
	COMMUNICATIONS/ FEEDBACK	
15.	**Events/ Representation Feedback** Pamela reported that the Scottish Infection Control Network is scheduled for next week. She advised that she will forward the HPS update that was provided for the network to SMT. Tom stated that Abigail has asked to meet with him to discuss the network and have it as a Managed Clinical Network. In relation to representation Tom asked for SMT to provide Ann Lang with a list of groups that they represent.	**PJ** **All**
16.	**Core and Divisional Team Brief** Copies of the latest Briefs have been issued.	

Item		Action
	NEW BUSINESS/ AGENDA ITEMS	
17.	**New Business**	
i)	**HAI Standards** A copy of the final standards have been issued. Tom stated that he is concerned how the HEI Inspectors will implement the new standards. At the recent HEI visit to GRI Kate reported that the inspectors requested additional evidence during the visit.	
ii)	**HEI Theatre Inspections** Craig reported that the new theatre tool was based on the tool that we were already using and are going to look at how to capture the process carried out during a peer audit. Kate advised that she will discuss this when she meets with the Lead Nurse at GRI.	
	ITEMS FOR NOTING	
18.	**Meetings Update:**	
i)	Lead Nurse Meeting The Lead Nurse meeting has been added to the agenda and Sandra will provide an update at the next SMT.	
ii)	ICD Meeting At the ICD meeting Craig reported that they discussed the units in Cystic Fibrosis and the policies for these areas and if they should belong to Infection Control. He said that a meeting has been arranged with Infection Control and the clinicians to consider the policy. With regards to the surveillance for SABs Craig asked if there is no obvious cause for the SAB and if it is not line related can this be documented. Clare commented that sometimes the clinicians are unsure of the cause and Ann suggested that this should be raised with Dr Stewart regarding the consultant feedback. Tom recommended that this be raised at AICC as we have the highest proportion of unsure answers regarding the source. Discussion took place regarding the MDR Care Plan with it not having a GGC stamp. Tom said for this to be a formal GGC document this would need to go through BICC for approval. Craig advised that this had been approved at the ICD meeting and the group agreed to call this document a CPE Care Risk Assessment template. Clare to forward Pamela a copy of the template to issue to the Policy Group.	**TW/ CW** **CM**
iii)	Board Infection Control Committee Nil to update.	
iv)	Acute Infection Control Committee Nil to update.	
v)	Partnership Infection Control Support Group Nil to update.	

Item	Action

19. Review of Actions and Decisions

- Tom to discuss the issue of fit testing for FFP3 masks at the next AICC meeting.
- Craig to raise at the lab meeting the suggestion to change the hairline screen to a wound screen for MRSA screening.
- Pamela to raise the impact of the audit and the output on individual's clinical practice at the next Head of Nursing meeting.
- Craig confirmed that the CPE group will be reformed and he will discuss this at the AICC meeting on Monday
- With regards to the PVC Care Plan Sandra and Pamela to ask the Heads of Nursing for clarification on when a patient is transferred from ITU to a ward when the Care Plan should be started.
- Tom to establish what sector Mearnskirk Hospital will come under.

20. Items Agreed

- With regards to the decolonisation regimen for MRSA the agreement was to use this for 5 days as directed
- The MDR Care Plan is to be called the CPE Care Risk Assessment template.

21. Any Other Competent Business

- Tom asked if anybody would like to do a presentation topic at future meetings to let him know.
- Pamela stated that Infection Control Teams do reviews of the Infection Control Policy with members of the public. She said that with a short audit tool she thought maybe asking a member of the Volunteer Group to join in with the audits.
- Teresa reported that three wards have been closed with flu at GRI. A Report will be run from Labstore to look at the samples for these patients.
- Kate suggested that we organise an OD day and invite all staff from Infection Control as some staff feel they are scrutineers. It was agreed to hold an OD day in early September.
- With regards to the CPD component for staff Craig asked if we should discuss an education item and it was proposed that this could be done over a lunch period. Craig, Tom and Sandra agreed to look into this. — **CW/TW/ SMcN**

22. Date and time of next meeting

The next meeting is scheduled for Wednesday 25 March 2015 at 1.30pm, ADM 2.16B Conference Room, Level 2, New Victoria ACH.

The dates for future meetings have been arranged as undernoted:

Date (2015)		Time	Venue
29	April	1.30pm – 3.30pm	Room L0/A/010, New Lab Block, SGH
27	May	1.30pm – 3.30pm	ADM 2.16B Conference Room, New Vic ACH
24	June	1.30pm – 3.30pm	ADM 2.16B Conference Room, New Vic ACH
29	July	1.30pm – 3.30pm	ADM 2.16B Conference Room, New Vic ACH
26	August	1.30pm – 3.30pm	Conference Room, Management Building, SGH
30	September	1.30pm – 3.30pm	ADM 2.16B Conference Room, New Vic ACH
28	October	1.30pm – 3.30pm	ADM 2.16B Conference Room, New Vic ACH
25	November	1.30pm – 3.30pm	Room L0/A/010, New Lab Block, SGH
16	December	1.30pm – 3.30pm	ADM 2.16B Conference Room, New Vic ACH

SBAR – Air changes , patient rooms , QEUH
Dr Teresa Inkster, June 2016

Situation	During an investigation into Mycobacterium abscessus cases in Cystic fibrosis patients at QEUH the ICT were alerted to reduced air changes in patient rooms.
Background	Recommended air changes for a single room on a ward are 6 air changes / hour as per HTM 03-01 (Specialised ventilation for healthcare premises). This would not normally have infection control sign off. A decision was made to reduce air changes to 3 ACH/hr in the renal dialysis unit for energy efficiency. This decision was then extrapolated to the rest of the hospital. Sufficient negative pressure of the rooms was not obtained to make this a safe option. Rooms are currently at a neutral pressure. There is therefore both reduced dilution of microbial contamination and escape of air out of the rooms into surrounding areas.
Assessment	Placement of patients with airborne infections in these rooms represents a risk of cross transmission to other patients and staff via the airborne route. High risk areas in the QEUH have been identified as; 1) Level 7 Respiratory wards 2) Outpatient respiratory clinics 1st floor clinic B rooms 77-85 3) Physio department – Room 16 , Ground floor 4) Renal transplant , level 4 5) ID unit , level 5 6) During winter months and respiratory virus season other wards will be high risk
Recommendations	1) Doors to rooms should remain closed 2) For aerosol generating procedures in in-patients 2 hours should be left before non- essential personnel enter the room and before a new patient is admitted. 3) For aerosol generating procedures 2 hours should be left between patients in the outpatient setting 4) Staff should continue to wear appropriate PPE 5) Renal transplant patients should where possible be nursed in ward 4C until 12 months post transplant. 6) ICT should be made aware of any renal transplant patients with PCP. 7) This information should be reviewed in conjunction with the HFS review of isolation rooms. Contingency planning may be required for patients with active pulmonary tuberculosis.

SBAR – Isolation rooms critical care
Dr T Inkster – May 2016

<table>
<tr><td>Situation</td><td>NHSGGC Infectious disease physicians at QEUH have written to the Lead ICD to express concern re the suitability/safety of isolation rooms in critical care for patients with multi-drug resistant Tuberculosis (MDRTB) and Middle east respiratory syndrome coronavirus (MERs-CoV)</td></tr>
<tr><td>Background</td><td>There are ten positive pressure ventilated lobbied (PPVL) rooms in Critical care at QEUH. Infectious diseases have access to two of these rooms for the isolation of patients with confirmed or suspected airborne infections.

Access to these PPVL rooms for ID patients can be difficult due to the competing need for critical care beds.

There are no negative pressure rooms in the QEUH.</td></tr>
<tr><td>Assessment</td><td>Guidance on the use of PPVL rooms for MDRTB is conflicting (see table below)

<table>
<tr><th>Guideline</th><th>Year</th><th>Recommendation</th></tr>
<tr><td>The Interdepartmental working group on Tuberculosis</td><td>1998</td><td>Minimum requirement for an infectious MDRTB patient is a negative pressure room</td></tr>
<tr><td>HBN 0401 Suppl 1 and SHPN 04-01 Suppl 1 Isolation facilities in acute settings</td><td>2005/2008</td><td>‘Airborne infection’ – no examples. Exclusion – does not describe isolation facilities required in an ID unit. Guidance will follow..</td></tr>
<tr><td>HBN 04-01 Suppl 1 Isolation facilities for infectious patients in acute settings</td><td>2013</td><td>PPVL suitable for chickenpox , measles and ‘some forms of pulmonary tuberculosis’</td></tr>
<tr><td>SHTM 03-01 Ventilation for healthcare premises Part A</td><td>2014</td><td>Infectious disease isolation room – negative pressure room -5PA, 10 ACH</td></tr>
<tr><td>NICE Tuberculosis</td><td>2016</td><td>Negative pressure room</td></tr>
</table>
</td></tr>
</table>

MERs- CoV

MERs- CoV is a new and emerging pathogen therefore not considered in HBNs or SHTMs.

Guideline	Year	Recommendation
Health Protection Scotland	2015	Patients should be admitted to a negative pressure isolation room. If not possible a single room with ensuite facilities should be used
CDC	2015	Patients should be placed in AIIR – single patient rooms at a negative pressure and minimum 6 ach/hour

Conclusion - There is no guidance which definitively states that PPVL rooms are suitable for either MDRTB or MERs – CoV. Negative pressure rooms are the preferred option.

Room design

PPVL rooms in critical care at QEUH have been modified slightly to the original design criteria e.g. extracts are present in patient rooms . In addition verbal report on ACH/hr in en-suites is 3 , recommendation is at least 10 ACH/hr

HBN 0401 suppl1 – ' **modifying** or failing to provide one element of the system will jeopardise the performance of the system as a whole'

Risks

The risks associated with PPVL rooms not being deemed suitable for MDRTB or MERs-CoV or having been modified against original design criteria are

1) Cross transmission or outbreaks of serious airborne infections in patients
2) Cross transmission or outbreaks of serious airborne

	infections in staff members who have not been adequately protected.
Recommendations	1) External review by Health Facilities Scotland as to the suitability of PPVL rooms in critical care for MDRTB and MERs- CoV patients , preferably to incorporate an opinion from the Department of Health 2) External review by Health Facilities Scotland of the design specification and validation with a view as to whether modifications represent an ongoing risk. Consideration given to contacting Malcolm Thomas for an opinion , the original designer of the PPVL concept. 3) Consider ring fencing two critical care beds for use by Infectious diseases department so that they have access to two rooms at all times Note this SBAR excludes recommendations for VHF.

SBAR – Air sampling , BMT units
Dr T Inkster 09/03/17

Situation	Air sampling has been performed on a monthly basis in B8/9 as a quality assurance check. There is no requirement as such to air sample and no agreed standards or guidance for interpretation of air sampling for UK BMT units. Practice is variable across the UK and three units which meet a high ventilation specification do not routinely air sample. The ventilation spec in 4B, QEUH is less than that of B8/9 therefore it is unclear what interpretative criteria to apply and what actions to take when results are elevated. Currently medical patients are housed in 4B with positive pressure ventilation turned off
Background	Particle counts and air sampling are undertaken in B8/9 unit on a monthly basis. Particle counts < 1000 are deemed acceptable limits (ISO standard for clean rooms) and fungal air sampling results <0.1 CFU/m3. Particle count results are available in real time however it is important to note the environmental conditions while sampling. Particles are not just fungus or bacteria but can be skin, dust, hair, cosmetics etc The commonest explanation for high particle counts are people in the vicinity of sampling or failure of the sampling to be carried out remotely. Particle counts can be higher when rooms have just been cleaned . If the aforementioned factors have been excluded high particle counts can alert infection control teams early to possible air quality issues and fungal contamination. They cannot be used in isolation as an accurate indicator or air quality. Air sampling results and fungal culture take 7 days to initial identification and a further 7 days for species identification .
Assessment	Literature review; <u>**Indications for air sampling**</u> Indications for air sampling are listed in the table below from Morris *et al.*[1] Note that regular maintenance is considered more important than air sampling. Air sampling is only one parameter of many with regards to assessment of the efficacy of a ventilation system.

Table I *Objectives of air sampling*

To correlate outbreaks of invasive aspergillosis with hospital construction/demolition
To identify potential sources of nosocomial aspergillosis, eg. potting soil, damp ceiling voids, damp fire proofing material, carpeting, etc.
To predict environmental spore contamination from outside sources
To identify defects/breakdown in hospital ventilation/filtration systems*
To monitor cleaning procedures that may release bursts of airborne *Aspergillus conidia*
To determine the efficacy of HEPA filters in laminar flow facilities
To monitor efficacy of procedures to contain hospital building work from hospital wards and other areas where high-risk patients are managed
To determine level of contamination prior to initial occupancy of special controlled environments

*regular engineering maintenance of the air supply system (whether HEPA-filtered or not) is more important than regular air sampling

Result interpretation

Interpretation of results can be difficult. The table below gives some recommendations. [1] For BMT rooms the HEPA filtered air value would apply i.e. <0.1 CFU/m^3

Table III Interpretation of air sampling data and recommendations

Levels of fungal spores vary by several orders of magnitude during the course of a day due to:
- Activity levels in any one particular area
- Fluctuations in temperature
- Fluctuations in humidity
- Fluctuations in air flow
- Changes in light level

A single air sample will often underestimate the fungal contamination in the air; multiple air sampling has to be performed
No strict numerical guidelines are available which are appropriate for assessing whether the contamination in a particular location is acceptable or not but the following threshold levels have been recorded:
- Outdoor air: total fungal count: 10^3 to 10^5 CFU/m^3
  - Aspergillus: 0·2–3·5 conidia/m^3
  - Note: seasonal variation recognised
- HEPA filtered air (> 95% efficiency and > 10 air changes per hour): < 0·1 CFU/m^3
- No air filtration: 5·0 conidia/m^3
- Construction/defective ventilation: 2·3–5·9 conidia/m^3
- If total fungal count exceeds 1·0 CFU/m^3 on several occasions the air systems or procedural practice in patient areas requires intensive evaluation.

There is no agreed level at which the risk can be numerically defined for Invasive Aspergillosis . Vonberg et al state that concentrations below 1 cfu/m^3 were sufficient in high risk patients. [2] It is best to conduct a series of samples over time to detect trends. [3]

Burst phenomenon

Understanding the burst phenomenon of fungi particularly Aspergillus is

	important. Spores can be released in bursts and the difficulty is capturing these bursts .No amount of air sampling will yield a preventative response to this phenomenon. [4]Negative air sampling may provide false reassurance. Striefel et al suggest that the emphasis should be on maintaining environmental controls and minimising the in house release of spores[4]
Recommendations/ Conclusions	1. In the absence of any definitive guidance the BOC parameters could be applied to level 4B, QEUH i.e. particle counts <1000/m^3, fungal counts <0.1/m^3 2. Air sampling has been performed on a monthly basis in BOC as a quality assurance check, however, this would not be an accurate indicator of air quality in an area where we know that the ventilation is of a lesser specification. The specified parameters are less reliable in an area where we expect to encounter higher counts. 3. Difficulties are likely to arise in the management of sustained elevated particle counts and repeated fungal growth with no obvious source should they occur – this is a possible scenario given the ventilation specification in 4B and the inability to HEPA filter all air entering the unit 4. Negative air sampling may provide false reassurance due to the burst phenomenon 5. To enable a period of monitoring prior to BMT patients moving in to 4B medical patients would have to be vacated and the positive pressure reinstated. 6. Ideally a minimum period of 4-6 weeks monitoring prior to BMT patients occupying the ward should be undertaken

References

1. Morris G et al Sampling of Aspergillus spores in air. Journal of Hospital infection 2000;44:81-92

2. Vonberg RP, Gastmeier P. Nosocomial aspergillosis in outbreak settings. Journal of Hospital Infection 2006;63:246-254

3.Humphreys H. Positive pressure isolation and the prevention of invasive aspergillosis. What is the evidence? Journal of Hospital Infection 2004;56:93-100

4. Falvey DG, Striefel A. Ten year air sample analysis of Aspergillus prevalence in a University hospital. Journal of Hospital Infection 2007; 67: 35-41

SBAR – Airborne infection , RHC, patient pathway
Dr T Inkster –Feb 2018

<table>
<tr><td>Situation</td><td>There is concern re the suitability/safety of PPVL isolation rooms in RHC for patients with airborne infections.</td></tr>
<tr><td>Background</td><td>PPVL rooms are situated throughout RHC. A review of these facilities in the adult hospital has suggested they are unsuitable for airborne infections. Work is ongoing with input from HPS and HFS with a view to upgrading to negative pressure facilities. These PPVL rooms are suitable for other infections not spread via the airborne route and for isolation of immunocompromised patients.</td></tr>
<tr><td>Assessment</td><td>Guidance for MDRTB is conflicting (see table below)
<table>
<tr><th>Guideline</th><th>Year</th><th>Recommendation</th></tr>
<tr><td>The Interdepartmental working group on Tuberculosis</td><td>1998</td><td>Minimum requirement for an infectious MDRTB patient is a negative pressure room</td></tr>
<tr><td>HBN 0401 Suppl 1 and SHPN 04-01 Suppl 1 Isolation facilities in acute settings</td><td>2005/2008</td><td>‘Airborne infection’ – no examples. Exclusion – does not describe isolation facilities required in an ID unit. Guidance will follow..</td></tr>
<tr><td>HBN 04-01 Suppl 1 Isolation facilities for infectious patients in acute settings</td><td>2013</td><td>PPVL suitable for chickenpox , measles and ‘some forms of pulmonary tuberculosis’</td></tr>
<tr><td>SHTM 03-01 Ventilation for healthcare premises Part A</td><td>2014</td><td>Infectious disease isolation room – negative pressure room -5PA, 10 ACH</td></tr>
<tr><td>NICE Tuberculosis</td><td>2016</td><td>Negative pressure room</td></tr>
</table></td></tr>
</table>

MERs- CoV

MERs- CoV is a new and emerging pathogen therefore not considered in HBNs or SHTMs.

Guideline	Year	Recommendation
Health Protection Scotland	2015	Patients should be admitted to a negative pressure isolation room. If not possible a single room with ensuite facilities should be used
CDC	2015	Patients should be placed in AIIR – single patient rooms at a negative pressure and minimum 6 ach/hour

Conclusion - There is no guidance which definitively states that PPVL rooms are suitable for airborne infection. Negative pressure rooms are the preferred option, a view supported by HPS/HFS.

Risks

The risks associated with use of PPVL room for airborne infection are;

1) Cross transmission or outbreaks of serious airborne infections in patients
2) Cross transmission or outbreaks of serious airborne infections in staff members who have not been adequately protected.

The risks associated with moving a paediatric patient elsewhere in the UK are

1) The lack of specialist paediatric ID input to a serious infection where treatment may be complex.

Recommendations

1) Nurse paediatric patients with MERs CoV in one of the two PPVL rooms in CDU, RHC. Implement appropriate IC precautions as per policy.
2) Nurse patients with Chickenpox or Measles in any PPVL room in RHC (not 2A). Implement appropriate IC precautions and obtain list of any staff / patient contacts
3) MDRTB – individual risk assessment by paediatric ID Consultant. Older children may be transferred to MDGH or GRI as per adult pathway. Younger children should be admitted to PPVL rooms in CDU, RHC with full infection control precautions in place.
4) Consider upgrade of two PPVL rooms in RHC to negative pressure facilities.

SBAR – Endoscopy facilities, NHSGGC
Dr Teresa Inkster 22/5/18

Situation	The endocopy unit at Gartnavel General hospital has insufficient air changes
Background	A validation exercise was undertaken in the endoscopy unit at Gartnavel General (ground floor). A ventilation contractor measured air flow rates within the rooms and assessed compliance against SHTM 03-01
Assessment	Air flow readings were below the SHTM 03-01 recommendations for critical areas. An endoscopy room should have 15 air changes per hour. The GGH room has 2 ACH/hr. The minimum requirement is 11.25 ACH /hr which accounts for a 75% reduction according to age of the unit. This requirement specifically relates to Bronchoscopy procedures particularly where Tuberculosis is suspected.
Recommendations	1) Need validation details for all endoscopy units in NHSGGC where bronchosopy is performed 2) If unit is non compliant we need to develop a risk assessment for that area. 3) Information we require for the risk assessments are - types of procedure undertaken - timings of procedure e.g. end of list - PPE worn by staff - Time between patients 4) ICT may recommend moving bronchoscopy procedures to other areas based on the findings in 3. 5) Endoscopy units performing bronchoscopy should be subject to regular validation checks 6) Non compliant endoscopy units should be placed on the risk register

SBAR – ward 4C QEUH

Dr T Inkster –July 2019

Situation	Ward 4C QEUH had been previously identified as an area of concern with respect to ventilation . Discussed at ventilation group and SBAR requested
Background	Ward 4C comprises 10 beds for haemato-oncology (non BMT) and 10 beds for renal transplant patients. Haematology patients in ward 4C were originally planned to be housed in ward 4B. The specification for 4B and this patient group was designed by Dr Hood (microbiologist) and comprised Hepa filtered rooms, air changes of 6/hr and positive pressures of + 6PA. BMT patients were a late addition to the QEUH site and were moved into this area with the remaining haem-onc patients being moved to 4C which was designed as a general ward area
Assessment	Ward 4C currently has patient rooms with no HEPA filtration , at < 3 air changes per hour and rooms at a slightly positive pressure. Chilled beams are present in patient rooms. Thermal wheel technology is present. The same patient group in the Beatson oncology centre is housed in ward B7. Ward B7 has some single rooms at positive pressure and is HEPA filtered throughout There is no capacity currently on QEUH site to isolate a BMT patient with an infectious diseases. This requires a positive pressure patient room with a negative pressure anteroom . Two such rooms were available on the Beatson top floor.
Recommendations	1) The feasibility study for ward 2A is applied to ward 4C. Key features should be; • Upgrade ward 4C to HEPA filtration and minimum 6ach/hr and positive pressure of + 6PA • Creation of double door entry to mitigate the risk from corridor air • Creation of an isolation room for an immunosuppressed patient with airborne infection either within 4B or 4C. Requires construction of an anteroom.

SBAR – Ward 6A environment
26/8/19, Microbiology dept QEUH

Situation	Ward 2A in Paediatric haemato-oncology was moved to Ward 6A QEUH in September 2018. This was initially planned to be a short term decant assessed via an options appraisal to enable water control measures to be implemented on 2A. During that time HPS commissioned a review of the ventilation strategy for ward 2A. An external report concluded that the ventilation strategy for 2A was abnormal, placing patients at risk of infection, therefore the decant had to be extended to enable extensive ventilation remedial actions. Given that there were no further cases that met the water incident case definition between September and April, a repeat options appraisal was not undertaken when it became apparent that the decant was to last much longer than at first anticipated. A PAG was held on 3rd June 2019 to discuss 4 cases of Gram negative bacteraemias. An IMT followed on 19th June due to a further environmental bacteraemia, this time a Mycobacterium species which was subsequently found to be related to the water supply utilising whole genome sequencing. The hypothesis for M chelonae acquisition was exposure to unfiltered water outside 6A, possibly operating theatres. The IMT process is still ongoing and to date there have been 11 confirmed and one possible case of Gram negative bacteraemias since 13th April.
Background	Surveillance of all bacteraemias was put in place when the ward was decanted to 6A. From September to April bacteraemia rates were very low and any Gram negatives were coliforms, i.e. expected species of bacteria and usually endogenous gut flora. From April 2019, bacteraemias secondary to environmental organisms have occurred, some of these meet the case definition from the previous incidents from 2A e.g.*Stenotrophomonas maltophilia*, *Enterobacter cloacae*. Others are from rare organisms not part of that incident but of a soil/water type of bacterial species. Examples include *Chryseomonas sp*, *Elizabethkingia miricola*, *Pantoea septica.*
Assessment	Current environmental risks on ward 6A 1. Air changes – essential for dilution and removal of pathogens generated within the room environment e.g.

from toilet plume, respiratory generated infectious aerosols, and water generated aerosols from taps and drains containing pathogens as well as flora shed from skin such as *Staphylococcus aureus*.
Current Air Changes per Hour is less than 3. SHTM guidance is 10 for neutropenic rooms i.e. less than a third of fresh air turnover required to meet standards

2.Chilled beam technology is in place in each bedroom at the point of supply

Chilled beam technology should NOT be used in the neutropenic setting.
Infection risks associated with chilled beams :

1. Build up of dust which typically harbours skin organisms, fungi and *Acinetobacter sp*. This is due to recirculation of air, with no clean to dirty pathway and with essentially the beam functioning as a filter that is not changeable which collects up dust and fibres from the room air. These are requiring 6 weekly cleaning schedule, however they are not designed to be thoroughly cleaned in situ and will require removal under HAISCRIBE conditions to achieve.
2. Water source from

a) Condensation
b) Leaks from the hot and cold circulating water (known contaminated cold water)
c) Dripping water from both can become contaminated with the dust organisms

The SHTM guidance states that condensation should not be allowed to occur when these systems are in place. However condensation events have been recorded on numerous occasions throughout the hospital including on 2A and 6A. This allows multiplication and growth of bacteria and fungi, particularly when dripping through collected dirt on the unit.

Leaking connections have also occurred which allows water borne organisms from a complex water system to ingress into the room. This poses a risk of Legionella as well as Pseudomonas and other water borne organisms. Water has been seen to pool in the frame of the unit thus causing a significant potential for fungal overgrowth.

This chilled beam water system has not been subject to the water quality management system through the water governance structures of the organisation. *Pseudomonas aeruginosa* and *P.oleovorans* and unidentified environmental organisms have been grown

	from the water supply, and from the surface swabs *Stenotrophomonas sp, Pantoea sp, Acinetobacter sp, Exophiala, Pseudomonas olevorans*, and fungal species. 3. Pressure cascade: recommended pressure of 10 pascals positive pressure to corridor in SHTM, currently there is a nominal 2 pascal positive pressure which is insufficient to ensure robust air movement out of the room, allowing external contaminants to ingress into the rooms from the building void and corridor. Furthermore air sampling studies have shown ingress form risers of heavily unfiltered contaminated air. 4. HEPA filtration: SHTM recommends HEPA filtration of all air supplied to the neutropenic rooms. Currently on 6A there is no HEPA filtration on the supply air. Portable HEPAs are in place in an effort to reduce airborne contamination, but this is not ensuring that HEPA filtered air only is breathed by patients. Contaminated air continues to enter the room and we are reliant on portable HEPA to clean the air 5. Air sampling in the bathrooms has detected pathogenic fungi such as Aspergillus and Mucoraceous mould. Previous issues with mould in the bathrooms was identified and rectified due to weak joins between the shower floor and the wall, however the risk remains as the weak join remains as per original spec – it is only a matter of time before the join is coming apart again. A long term solution to remove the join altogether has not been supplied to date. There is potential for HEPA filters to be placed in the bathroom ceilings, however again, this is a cleaning method for air rather than a HEPA supply. 6. Toilets – toilet plume is a risk as no toilet seat in place. These are currently being rolled out 7. Exposure to unfiltered water ; while all bathroom and bedroom outlets have had point of use filters applied , it has not been possible to place these in the DSR where water is sourced for domestic cleaning . 8. Ceiling: solid ceilings are required to both assist with positive pressure achievement and protection from ingress of water from services in ceiling; however ceilings are tiled and therefore inappropriate for this setting. 9. Play areas; there is no play area and communal toys are

	situated in the corridor, thus presenting a risk of cross transmission 10. Door entry – no double door or pressure cascade therefore external hospital air ingresses to the unit readily 11. Kitchen hand wash sink is a non compliant size and no POU filters. 12. Prep room – stainless steel sink, not useable due to tap misalignment and therefore clinical hand hygiene sink is being used for prep room functions
Recommendations	1. The decant from 2A was for a short term only and given ongoing environmental risks and recent environmental bacteraemias, a reassessment of the options appraisal is urgently acquired. 2. 6A should be considered to have significant unacceptable levels of infection risk for the immune compromised patients due to the built environment. 3. External peer review from colleagues in Great Ormond Street

In alphabetical order;

Dr Alison Balfour
[redacted]
Dr Teresa Inkster
Dr Kam Khalsa
Dr Nitish Khanna
Dr Christine Peters
Dr Kalyopi Valyraki
Dr Pauline Wright

References

1. Nishiura H. Early detection of nosocomial outbreaks caused by rare pathogens : A case study employing score prediction value. Osong Public Health Res Perspect 2012:3:121-127

2. Urrea M , Rives S, Cruz O, Navarro A, Garcia JJ, Estella J. Nosocomial infections among paediatric haematology/oncology patients: results of a prospective incidence study. Am J Infect Control 2003;32:205-208

3. Arega B, Wolde-Amanuel Y, Adane K, Belay E, Abubeker, Asrat A. Rare bacterial isolates causing bloodstream infections in Ethiopian patients with cancer. Infectious Agents and Cancer 2017;12:40

4. Simon A, Ammann RA, Bode U, Fleischack G, Wenchel HM et al. Healthcare associated infections in paediatric cancer patients : results of a prospective surveillance study from university hospitals in Germany and Switzerland. BMC Infectious Diseases 2008;8:70

5. UK Department of Health. HTM 03-01. Specialised ventilation for healthcare premises. Part A Design and Validation . 2007

6. Health Facilities Scotland. SHTM 03-01. Specialised ventilation for healthcare premises. Part A, Design and Validation 2014

7. CDC. Guidelines for environmental infection control in healthcare facilities 2003

8. CDC . Guideline for isolation precautions : preventing transmission of infectious agents in the healthcare setting. 2007

9. CDC. Guidelines for preventing opportunistic infections among haematopoietic stem cell transplant recipients. Recommendations of CDC, the Infectious Disease Society of America and the American Society of Blood and Bone Marrow Transplantation. 2000

10. Yokoe D, Casper C, Dubberke E, Lee G, Munoz P et al. Infection prevention and control in healthcare facilities in which haematopoietic cell transplant recipients are treated. Bone Marrow Transplantation 2009;44:495-507

11. Sherertz RJ, Belani A, Kramer BS , Elfenbein GJ, Weiner RS et al. Impact of air filtration on nosocomial aspergillus infections. Unique risk of bone marrow transplant recipients. *Am J Med* 1987;**83**:709-718

12. Withington S, Chambers ST, Beard ME, Inder A, Allen JR. Invasive aspergillosis in severely neutropenic patients over 18 years:impact of intranasal Amphotericin B and HEPA filtration. *Journal of Hospital Infection* 1998;38:11-18

13. Hahn T, Cummings KM, Michalek AM, Lipman BJ, Segal BH, McCarthy PL. Efficacy of high efficiency particulate air filtration in preventing aspergillosis in immunocompromised patients with haematologic malignancies. *Infect Control Hosp Epidemiol* 2002;**23**:525-531

14. Noksin GA, Peterson LR. Engineering infection control through facility design. *Emerg infect Dis* 2001;**7**:354-357

15. Rhame FS, Streifel AJ, Kersey JH Jr, McGlave PB. Extrinsic risk factors for pneumonia in the patient at high risk of infection. American Journal of Medicine 1984;76:42-52

16. Humphreys H. Positive pressure isolation and the prevention of invasive aspergillosis. What is the evidence? *Journal of Hospital Infection* 2004;**56** :93-100

17. Thio CL, Smith D, Merz WG, Streifel A. Refinements of environmental assessment during an outbreak investigation of invasive aspergillosis in a leukaemia and bone marrow transplant unit. *Infection Control and Hospital Epidemiology*. 2000;**21**:18-23

18. Gray JW, Ludman LJ. The protected environment for high-risk haematology patients: as safe as we think? J Hosp Infect 2016; 92(3): 295.

19. Cervia JS, Barber F, Armellino D, Klocke J, Bayer RL. Point of use water filtration reduces hospital acquired infection in bone marrow transplant recipients. *Transplant Infectious Diseases* 2010;**12**:238-241

20. Garvey MI, Bradley CW, Holden E. Waterborne Pseudomonas aeruginosa transmission in a haematology unit. *American Journal of Infection Control* . 2018;**46**:383-386

21. Litvinov N, da Silva MT, van der Herjden IM, Graca MG, Marques de Oliveria L et al. An outbreak of invasive fusariosis in a children's cancer hospital. Clinical microbiology Infection . 201521;268 e1-7

22. Dziubian E, Franks J, So M, Peacock G, Blaney D. Elizabethkingia in children; a comprehensive review of symptomatic cases reported from 1944 to 2017

SBAR Action Plan submitted to Care and Clinical Governance Committee on 5th December 2017 with updated position as of January 2019

Item	Issue	Current Position as of 5th December 2017	Future Actions	Current Position- January 2019
1	PPVL rooms not compliant with SHTM standards Critical Care	Facilities colleagues confirmed that there are 10 air changes per hour and a positive pressure of 10 pascals in the PPVL rooms which is consistent with SHBN 04-01.	Included in item 2	PPVL Schedule attached 34 rooms on schedule across RHC/QUEH. 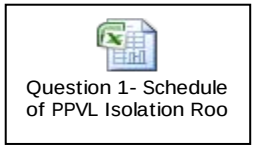 Question 1- Schedule of PPVL Isolation Roo 7 rooms being converted to Negative pressure rooms to differentiate between two types. See Table 1. Work will recommence in April 2019. **Table 1** RHC – Ward 2C – Room 6 RHC – CDU – Room 18 RHC – PICU – Room 5 QEUH – Medical HDU – Room 43 QEUH – Medical HDU – Room 44 QEUH – ITU 1 – Room 24 QEUH – Surgical ITU Unit 1 – Room 4 Ward 2A has had 4 rooms converted to Positive pressure at a cost of [redacted]. Lead ICD confirmed with Chief Nurse (CN) that three rooms within RHC would be suitable for IDHC if needed.
2	PPVL rooms do not provide appropriate protection for patients with infectious diseases of high consequence (IDHC) e.g. MERS, SARS This issue also exists in the Royal Hospital for Children	IDHC should be nursed in negative pressure rooms. These are not available in QEUH. In order to address this issue in the short term a patient pathway has been agreed by the Infectious Disease (ID) Clinicians whereby patients will be routed either to GRI or Lanarkshire ID unit. Chief Nurse (CN) for Paediatrics discussing with clinical teams a pathway for children.	Heath Protection Scotland (HPS) have been sent information on these rooms and we await their advice on whether they can be used for patients with IDHC or if not what actions could be taken to modify these rooms to provide negative pressure. This advice was sought in 2016 & 17.	
3	Lack of isolation rooms in the emergency department.	ED was designed with input from clinical staff and observation of patients was a priority. There are	Property Procurement Facilities Management	Options were considered to convert existing PPVL to negative pressure facilities suitable for infectious patients. However there are currently no specific plans to develop isolation rooms within Emergency Department.

		single rooms in ED but not negatively pressured isolation rooms.	(PPFM) has commissioned a feasibility study to ascertain if negatively pressured rooms are technically feasible	
Item	**Issue**	**Current Position as of 5th December 2017**	**Future Actions**	**Current Position as of January 2019**
4	Rooms not built to the standard expected as a tertiary referral centre.	The transfer of the Infectious Diseases Unit was a late addition to the project and was not fully commissioned as an ID unit at the outset.	Actions as described in item 2.	Actions as described in item 2.
5	Microbiologists not aware of plans to upgrade areas.	Lead Infection Control Doctor (ICD) was aware of this proposal.	Work continues with input from the Lead ICD.	**Health Board Process** HAI Scribe 1 - PPVL and PPIR.docx The process is that any refurbishments are signed off by ICD/ IPCT in conjunction with the estates department. These are signed off at various stages through design to completion and handover. Final sign off is undertaken with reference to relevant SHTM's design criteria and commissioning/ validation data provided by an external contractor. A project manager or lead (usually Estates) will use Part B to identify, manage and record built environment infection control risks of a project within health care premises. The assessment will take into account the nature of the work to be undertaken and the adjacency to patient areas. The SHFN 30 HAI Scribe document will be put in place before work commences. This comprises sets and check lists. Both the Infection Prevention and Control Team and the lead clinical staff will be asked to review and approve the assessment before work commences. The size of the project will determine the amount of involvement by the IPCT, which may include regular review during the project and inspection at the end. The ICD would provide advice on any environmental sampling to be undertaken prior to areas handover to users.

Item	Issue	Current Position as of 5th December 2017	Future Actions	Current Position as of January 2019
6	HEPA filters in PICU for the protection of patients in the Bone Marrow Transplant Unit (BMTU) that might need critical care during treatment. The BMTU is ward also referred to as ward 2A.	HEPA filters were installed within PICU/Ward 2a week commencing 6 November 2017, within room numbers 12 and 17 – previously installed within room 18. HEPA filter still to be fitted in room 5 (access to be agreed with clinical colleagues). HEPA filters were also fitted into RHC Ward 3c week commencing 13 November 2017 within rooms 9 & 10.	Work commenced mid November 2017, therefore ahead of May 2018, as noted above.	PICU Room 5: Installation of HEPA filter is no longer required as the room has been converted to negative pressure accommodation for infectious patients. (as described in item 1 & 2) Planned work: [redacted] spend and 12 months capital plan, for the upgrade of ward 2A (Haemato–oncology\TCT) ventilation system & internal building elements to provide HEPA filtered environmental conditions suitable for use by Immuno-compromised patients with Enhanced (Positive Pressure) Single Bedrooms with En-Suite facilities, providing 10ac/hr positive pressure within each Bedroom space, and ensuring the Bedrooms are at +10Pa pressure gradient relative to the adjacent Corridors. All in accordance with design principles embodied within SHTM 03-01 guidance documentation. Outline Programme: • Feasibility\Design\Tender phase - 21 weeks from ward decant. • Construction phase - 30 weeks from award of contract. The findings of the feasibility study will be used to determine any future requirements in other Ward areas.
7	HEPA filters in prep room	HEPA filters have not been routinely fitted (as standard) within prep rooms, however HEPA filters are fitted within QEUH Ward 4B. Instruction required to determine whether HEPA filter should be fitted into RHC Ward 2A prep room.	A feasibility study will be undertaken to ascertain if HEPA filters can be installed in the prep room.	A Feasibility Study has been tendered and the estimated timescale for full feasibility and design stage, is 3 months from the date of the future decant of ward. The plan will take into account full HEPA filtration of all aspects of Ward 2A (including Prep room)
8	IVs prepared in treatment room.	IVs are prepared in the preparation room but not chemotherapy which is prepared in a specialist unit.	CN paediatrics confirmed that this was the standard practice.	IVs are prepared in the preparation room; however chemotherapy is prepared in a specialist unit.
9	Outbreak of Aspergillus	There were two cases of aspergillus	HPS have been contacted for	ICD has confirmed with HPS that there is no sampling regimen for non

	associated with poor air quality	associated with the ward in March 2017. This was fully investigated and was possibly associated with a leak into the ceiling space which was not immediately apparent. On review of cases in the new BMTU and the unit previously located in Yorkhill there is no significant increase in the number of cases of this infection. This was fully reported as per Chapter 3 of the National Infection Prevention and Control Manual to Health Protection Scotland.	advice on what would be an appropriate regime for air monitoring in this area.	ventilated areas.
Item	**Issue**	**Current Position as of 5th December 2017**	**Future Actions**	**Current Position as of January 2019**
10	Concern that the statement issued advised that BMT services in RHC were unaffected by issues identified in the adult BMTU.	Clarification from the NHSGGC Comms Team "To the recollection of colleagues involved, the Communications team were not briefed at the time of the release about the adult BMT move of any testing underway at the Royal Hospital for Children.	Clarification issued to the meeting attendees. No further action required. This perhaps appears to be misinterpretation of the media communication.	**Clarification from the NHSGGC Communications Team** 070715 BMT News Release.doc The final line of the press release of 8th July 2015 "Bone Marrow Transplant Service Temporary Relocation" was written to make clear to media that the move of the adult service did not include the paediatric service at the Royal Hospital for Children and that the latter was not moving. "
11	HEPA filters not in place in PICU	Action complete as previously agreed and noted within point 6.		Point 6 covers the action

Item	Issue	Current Position as of 5th December 2017	Future Actions	Current Position as of January 2019
12	Increase in the number of line infections in Ward 2A	Two years' retrospective data were analysed in May 2017 and it was noted that there was an increase in line related infection. The initial baseline infection rate per 1000 total line days was 3.25 and this had risen to 6.33. A group led by CN Paediatrics first met in **May 2017** to review this information and put actions in place to reduce this incidence. The last 4 months (July to October) have shown improvement in infection rates. CN Paediatrics presented a paper to the Board Infection Control Committee on the 27 November 2017 outlining several work streams and the most recent infection rates in this area.	There are currently four work streams in place to look at key initiatives to reduce line infections in BMTU, these include: • Line Insertion and access in theatre. • Access and Maintenance of lines • Staff Education • Patient and Parent engagement **Next Steps** From 1st December 2017 every CLABSI (line associated infections) will be subject to rigorous review utilising Event Cause Analysis methodology within 72 hours of a reported CLABSI	CLABSI 2A.docx Ward 2A Update for BICC May 2018 JRo.c An Improvement Group has been established to reduce Central Line Associated Bacteraemia Infections. Background The CVL QI Improvement Group was formed in May 2017 comprising of key stakeholders.. This is benchmarked against Cincinnati Children's Hospital in Ohio. The infection control team have been working closely with the clinical team in ward 2A since April 2017. • An infection control nurse visits ward 2A between two and four times per week and provides opportunity to observe practice and work collaboratively to make improvements where required. • A series of improvement interventions have taken place which have resulted in positive outcomes which can be shown in the data and resultant low infection rates. • IPCT have met with hemato-oncology colleagues in QUEH and BOC (January 2019) and are currently piloting a surveillance programme for PICC line infections. • Graph and minute attached showing reduced line related infection - April 2018 data- rate of 2.15
13	Increase in the number of line infections	IPCT participating in above work. Line related surveillance was subsequently picked up by the Directorate.	Ongoing assessment of surveillance activity and resource within the IPCT to enable IPCT to respond to local clinical needs.	

Item	Issue	Current Position as of 5th December 2017	Future Actions	Current Position as of January 2019
14	Dr Redding concerned that the ongoing work would not accurately pick up any concerns.	• As above work streams in place re line infections. • IPCT audit process is in place and ongoing; this includes audit of the environment, audits of line and urinary catheter care. Audits of standard Infection Control Precautions (SIPS). • IPCT twice weekly visits. • GGC compliant with the National IPCT Manual – this lists all types of infections that should be reviewed and what should be reported if an outbreak or incident occurs. • Weekly report to Board and Acute Directors weekly on an IPC issues throughout GGC.	IPCT and CN Paediatrics will continue to have a clear focus on this area.	HPS have published a nationally agreed list of alert micro-organisms which should be notified to IPCTs which may require further investigation. Hospital level analysis has been carried out by HPS using the national HAI surveillance data. Hospital attributed cases of *Clostridioides difficile* infection (CDI), *Escherichia coli* bacteraemia (ECB) and *Staphylococcus aureus* bacteraemia (SAB) for 2016, 2017 and 2018 (Q1 to Q3) were compared to peer hospitals with similar patient population using funnel plot analysis. The Queen Elizabeth University Hospital (QEUH) and the Royal Hospital for Children (RHC) were not highlighted as an exception (rate above the 95% confidence limit) in any of the plots for 2016, 2017 and 2018 (Q1 to Q3). • The peer hospitals for QEUH were Aberdeen Royal Infirmary (ARI), Forth Valley Hospital (FVH), Glasgow Royal Infirmary (GRI), Ninewells Hospital (NWH), Royal Alexandra Hospital (RAH), Royal Infirmary of Edinburgh (RIE), University Hospital Crosshouse (UHC) and Western General Hospital (WGH) • The peer hospital for RHC were Royal Aberdeen Children's Hospital and Royal Hospital for Sick Children (Edinburgh) • ECB and SAB cases were hospital attributed assigned through enhanced surveillance ECOSS webtool. For CDI cases were categorised through linkage with Scottish Morbidity records (SMR01) for a patient with CDI onset on day 3 or later following a hospital admission on day one.

				• The denominator was hospital level 'total occupied bed days (TOBDs)' using ISD1 data. • Funnel plot analysis was based on an over-dispersed Poisson regression model. • See Q13 in response to Line Infections
Item	**Issue**	**Current Position as of 5th December 2017**	**Future Actions**	**Current Position as of January 2019**
15	Microbiologists do not have the information to advise clinical staff on where to place immunocompromised patients.	Director of Regional Services stated that this had never been raised as an issue by clinicians within his service that care for patients who are immunocompromised. Most patients who are immunocompromised are cared for within this directorate. It was agreed by the group that placement of immunocompromised patients was a decision that should be taken by the clinical team looking after the individual patients.	Dr Peters agreed to circulate a document she had used in another board area. David Loudon (Director of PPFM) agreed to send the microbiologists a list of where the PPVL rooms were in the QEUH and RHC. It was agreed that this would be reviewed at the Regional Services Governance Forum	Guidance has been provided to microbiologists and clinicians about which rooms were suitable for which patients in relation to infection control. At the time that the original guidance was issued it was thought that rooms had 3 air changes per hour with rooms at a slightly negative pressure was sufficient. Concerns regarding ventilation in Wards 2A/2B have been acted upon and the Lead ICD has also requested sampling in other high risk areas. Work has been ongoing between the Estates team to rebalance pressures and rectify any pressure differences in these areas.
16	Infection rates are not being monitored.	GGC compliant with the National IPCT Manual – this lists all types of infections that should be reviewed and what should be reported if an outbreak or incident occurs. • Every patient with a notifiable infection is reviewed and monitored. • NHSGGC is fully compliant with all elements of the national Mandatory Surveillance of	ICM has invited HPS to review the NHSGGC systems for surveillance and reporting of infections – this assessment took place on the 29.11.17, the initial feedback was positive but we await the full report.	**Surveillance Undertaken by the GGC Infection Prevention and Control Team (IPCT)** <u>Definition of HAI</u> All Hospital acquired infection is defined as not being present until 48 hours after admission as a national standard **NHSGGC is fully compliant with Chapter 3 of the National Manual and applies the following definitions in managing incidents/outbreaks;**

		Infection Programme (mainly specific surgical site and blood stream infections. • Weekly report on exceptions is sent to the Board Directors. • Monthly reports are sent to Senior Management teams. • All outbreak and incidents are reviewed by the Board, Partnership and Acute Infection Control Committees. • The most recent National Point Prevalence Survey in 2016 indicated that both the QEUH and RHC were under the national average in terms of the incidence of Hospital Acquired Infections.		**A healthcare associated infection outbreak** • Two or more linked cases with the same infectious agent associated with the same healthcare setting over a specified time period **A healthcare infection exposure incident** • Exposure of patients, staff, public to a possible infectious agent as a result of a healthcare system failure or a near miss **A healthcare infection data exceedance** • A greater than expected rate of infection compared with the usual background rate for that healthcare location. <u>Linked Cases</u> A full assessment of epidemiological links in time, place and person is undertaken. Commonalities such as equipment, procedures, environmental exposures are investigated. Some organisms can be sent to a specialist laboratory for comparison using typing techniques. The HIIAT assessment tool is used for all incidents/outbreaks <u>Alert organism reporting and investigation</u> The IPCT monitor all (HAI and non-HAI) CDI, *Staphylococcus aureus* bacteraemia (SAB) and *E.coli* bacteraemia and report case totals daily to the Senior Management Team for IPC. In 2018. Triggers are in place for the four most common environmental Gram negative organisms in high risk areas and the surveillance team issue reports to the ICDs and LIPCNs The Infection Prevention and Control Nurses (IPCNs) receive prospective notification of all agreed alert organisms (as per National manual) via our IPC software package (ICNet). On receipt, the IPCNs will provide advice to clinical staff on placement of the patient as appropriate and review the case to determine if it is an HAI and therefore requires further investigation.

				All CDI and SAB are reported to the sector management teams weekly. This report also includes incidents under investigation and outbreaks. The monthly sector reports are tabled at local sector / service clinical governance groups for discussion. The HAIRT is a national reporting template which contains all CDI, SAB, SSI surveillance, incidents and outbreaks and routinely provided to the Board at every meeting and reviewed. A bi-monthly HAIRT is presented to the Acute and Board Clinical Governance Groups as well as the Acute, Partnerships and Board Infection Control Committees.
Item	**Issue**	**Current Position as of 5th December 2017**	**Future Actions**	**Current Position as of January 2019**
17	There are three air changes and chilled beam technology instead of the 6 air changes recommended.	There are three air changes in the single rooms within both QEUH and RHC.	Director of Facilities agreed to take this issue forward with NHS D&G to share learning with regards to this type of technology and draw to their attention concerns regarding cleaning of the beams.	Action complete and information shared with NHSGG&C
18	Use of cleaning agents.	NHSGGC has for several years changed the cleaning regimens each winter to include a chlorine based detergent as a strategy to reduce norovirus outbreaks. This switch commences on the 1st of November and continues until the 30 April each year or longer if the season is prolonged. This is not recommended in the National Infection Control Manual because of lack of scientific evidence but is put in place in GGC based on	This policy and practice will continue unless new evidence emerges	Every winter Health Protection Scotland alert boards when the norovirus season commences. Each year in response to this, the IPCT ask facilities to change all cleaning products to one that includes chlorine. Chlorine based detergents are recommended to be used during outbreaks of norovirus (HPS National Guidance). NHSGGC use them as recommended during outbreaks but also to potentially prevent outbreaks when patients with norovirus are admitted to wards and departments. This policy continues to be implemented and reviewed. We note any emerging evidence and update practice as required.

		local site knowledge.		
19	Roles and responsibilities with regards to cleaning of the dishwashers in the ward pantries was not clear.	IPCT held an Incident Management team Meeting (IMT) on 22nd of September. Dishwashers were removed from use until they could be serviced and re-sampled.	Catering staff agreed to assume the responsibility for cleaning of the dishwashers going forward.	NHSGG&C is fully compliant with the National Monitoring of Domestic Services. Point of use water filters have been installed in Dishwashers in use in the QEUH and no issues have been identified since these have been in place.
20	Issue with dishwasher not picked up during routine monitoring.	GGC fully compliant with the National Monitoring of Domestic Services	Roles and responsibilities had been clarified and a process in now in place.	As an extra precaution dishwashers have been removed from the adult Cystic Fibrosis wards and are not used and the clinical areas in the Royal Hospital for Children.
Item	**Issue**	**Current Position as of 5th December 2017**	**Future Actions**	**Current Position as of January 2019**
21	Cleaning of Temperature Control Values (TCVs)	TCVs are maintained in all high risk areas and plans are in place to carry this out in all areas despite this not being mandatory. Protocols are in place to manage this process.	Agreed works within QEUH-plant room 31 to sanitise TMVs is complete once the Chlorine Dioxide has embedded into the system.	Board recognises paramount importance of patient safety and the need to ensure the water systems and controls are consistently compliant with all relevant safety standards. Board water safety is in place and water systems and processes are monitored as per national guidance Plans are in place to carry out schedule of work to TMV's (where) in 2019 once the water contamination incident is concluded and chlorine dioxide residual values are within defined parameters.
22	Water testing is not as per national guidance	Board water safety is in place and water systems and processes are monitored as per national guidance.	None	NHS GGC is compliant with SHTM 04-01 Part B – Operational Management (Page 72) testing for Legionella guidelines and with the HSE Legionnaires disease "Microbiological Monitoring". HSG 274 The local water safety groups have been established and review testing results to discuss anything any exception reports. This includes all counts of Legionella serogroup 1. Pseudomonas testing has been implemented in high risk areas where flow straighteners are present in taps. ICDs have also requested water testing as part of an incident involving environmental Gram negative organisms.

				Authorising Engineer for the Board has reviewed this on our sites as part of the Authorising Engineers role and responsibilities and has provided a statement to Estates and Facilities.
Item	**Issue**	**Current Position as of 5th December 2017**	**Future Actions**	**Current Position as of January 2019**
23	Sewage leaks in institute not reported to microbiologists	Leaks in any clinical areas that required advice from an ICD are reported	Ensure reporting is ongoing.	Leaks in any clinical areas that required advice from an ICD are reported. Nurse surveillance system introduced and process now exists to monitoring infection control rates. Surveillance review at infection control meetings held regularly and supported by Infection Control Team.
24	Plumbing not replaced in Neuro Surgical Block	The Director of Regional Services advised that there is ongoing work in the neuro building that would because of its complexity, take several years to complete, in the meantime the new operating theatres were due to open in January 2018.	Works are ongoing as planned.	The previous "current position" is continuing. There is a recognised investment requirement for the infrastructure, including the drainage in the Neurosurgical Block. This has been taken through the Acute Capital Committee. The Business case process supported by the EAMS data is in process. The delivery of the works will be over an extended period of time. The completion of the new operating theatres is expected to be April 2019.
25	Perceived Increase in surgical site infections	Regional Services has funded 1.5 WTE surveillance nurses to carry out prospective surgical site surveillance in this area. For context, there are 3 surveillance nurses that provide this service for the rest of GGC therefore the investment in the INS to monitor SSI is significant.	Continue to monitor trends in surgical site infection in this area.	• Surveillance commenced in July 2016 for cranial and spinal surgery in INS and in November 2016 for major free flap surgery in OMFS. • A substantive 1.0 WTE surveillance nurse has been in post since September 2018. • Surveillance comprises in-patient and 30 day readmission to GGC hospitals. • SSI rates are reported in monthly surveillance reports and as we have now reached in excess of 25 months data , Statistical Process Control(SPC) charts are used to monitor trends. These are currently

		Although it is difficult to obtain benchmark rates for SSI in this area, continuous surveillance will pick out trends and therefore any increase. This is monitored via a group unique to Regional Services – the RS Surgical Site Infection Group. The group in turn reports into the Regional Service Clinical Governance Group		stable and within control limits. • The RS Surgical Site Infection Group continues to meet every quarter to discuss reports and review progress. • Surveillance was undertaken for External ventricular devices in neurosurgery and quality improvement work was undertaken. This resulted in the development of an EVD insertion care bundle and an EVD output record
Item	**Issue**	**Current Position as of 5th December 2017**	**Future Actions**	**Current Position as of January 2019**
26	Decontamination facilities	Most decontamination of equipment is conducted in the central Decontamination Unit or Endoscopy facilities. Respiratory equipment is easily damaged and advice from manufacturers is often difficult to implement. There should be dedicated facilities with established work flow patterns (dirty to clean). At this point in time the Decontamination group (which is a sub group of the Board Infection Control Committee) has give advice on many items of equipment and had obtained room designs which could be used if space was identified in QEUH and RHC. This has been	Pursue HPS for advice regarding the list of equipment provided. Establish status of planning for new decontamination areas.	At this point in time the Decontamination group (which is a sub group of the Board Infection Control Committee) has given advice on many items of equipment and had obtained room designs which could be used if space was identified in QEUH and RHC. • We are currently investigating the optimum method and best equipment in line with HPS guidance which was issued in 2018. • In addition a list of specialist equipment that we require national advice on has been submitted to Health Protection Scotland. • An area for respiratory decontamination has been identified on the QEUH and RHC site and is currently awaiting sign off

		submitted to management colleagues for consideration. In addition a list of specialist equipment that we require national advice on has been submitted to Health Protection Scotland.		
Item	**Issue**	**Current Position as of 5th December 2017**	**Future Actions**	**Current Position as of January 2019**
27	Roles of IPCT have changed	The current IPCT all have Job Descriptions which have been in place for ten years. There is a clear documented governance structure that has been reviewed by Price Waterhouse Cooper and approved by the Infection prevention Committees within NHSGGC. There is a clear management structure which complies with the recommendations contained within the Vale of Leven Report and the Healthcare Environment Inspectorate Standards	A review of the roles and responsibilities of the Infection Control Doctors in South Glasgow will be undertaken by the Chief of Medicine for Diagnostics. The ICM has invited HPS to undertake a review of IPC surveillance and reporting systems in place.	A review of roles and responsibilities of infection Control Doctors was undertaken on the 7th December 2017 and recommendations have been taken forward. The ICD group developed an ICD job description which has been agreed by all ICDs and agreed with the ICM All ICD's have Job Plans and organisation development events have taken place and continue to take place on a regular basis. Further resources are currently being identified by NHSGG&C to strengthen the Infection Control team including provision of senior project management support to ensure that all of the strands of work at the QUEH including water, IC, ventilation etc is effectively coordinated. The interface between Infection Control and Estates/Facilities is also being examined with a proposal for strengthening the existing arrangements to ensure clear lines of accountability and coordination of current and future activity.

Fw: 20151210 (09.58) Peter Hoffman RE: HPS SBAR BMT

Inkster, Teresa <Teresa.Inkster[redacted]
Fri 20/05/2022 11:02
To: Inkster, Teresa <Teresa.Inkster[redacted]

From: Williams, Craig <Craig.Williams[redacted]
Sent: 21 December 2015 10:39
To: Harkness, Anne <Anne.Harkness[redacted] Jenkins Gary (NHS GREATER GLASGOW & CLYDE) <Gary.Jenkins[redacted]
Cc: Cruickshank, Anne <Anne.Cruickshank[redacted] Inkster Teresa (NHS GREATER GLASGOW & CLYDE) <teresa.inkster[redacted] Walsh, Tom <Tom.Walsh[redacted]
Subject: FW: 20151210 (09.58) Peter Hoffman RE: HPS SBAR BMT

Dear Anne

I wonder if you could let me know how you and Gary would like to take this forward.

Best wishes

Craig

Prof Craig Williams
Consultant Microbiologist Royal Hospital for Children, Glasgow
Lead Infection Control Doctor, NHSGGC
Professor of HAI, UWS

[redacted]
w. www.uws.ac.uk/hai

From: Inkster Teresa (NHS GREATER GLASGOW & CLYDE) [mailto:teresa.inkste[redacted]
Sent: 18 December 2015 14:09
To: Walsh, Tom; Williams, Craig; Cruickshank, Anne
Subject: FW: 20151210 (09.58) Peter Hoffman RE: HPS SBAR BMT

Dear all - Annette Rankin from HPS has forwarded me the email below from Peter Hoffman. There are comments regarding the ICU rooms and isolation rooms in renal where BMT patients may be admitted to .

Melanie Mccolgan informed us at Mondays adult BMT meeting that these areas were outwith the remit of the group.

I know Anne Harkness had been leading on the critical care rooms - is this still the case and should these concerns be addressed by that group?

Kind Regards
Teresa

Dr Teresa Inkster
Consultant Microbiologist and Infection Control Doctor
A49618520

Dept of Microbiology
Queen Elizabeth University Hospital
Glasgow
[redacted]

From: Rankin Annette (NATIONAL SERVICES SCOTLAND)
Sent: 17 December 2015 12:09
To: Inkster Teresa (NHS GREATER GLASGOW & CLYDE)
Subject: FW: 20151210 (09.58) Peter Hoffman RE: HPS SBAR BMT

From: Peter Hoffman [mailto:Peter.Hoffman[redacted]
Sent: 10 December 2015 09:58
To: Rankin Annette (NATIONAL SERVICES SCOTLAND); Lockhart Michael (NATIONAL SERVICES SCOTLAND)
Subject: 20151210 (09.58) Peter Hoffman RE: HPS SBAR BMT

Thanks for the reminder Annette. My answers are:

"The Critical care rooms (are lobbied) and will house patients who require intensive care however whilst they are lobbied rooms I don't think they are positive pressure/HEPA filtered. One of our recommendations will be is that there should be a facility within critical care that offers the same protection for these patients as the BMT unit: do you agree?" In the ideal world: Yes – at least one of the ITU rooms would offer the same protection as the BMT rooms. The (clinically assessed) alternative would be that BMT patients on ITU are given fungal prophylaxis. It could be that the local decision is based on a) efficacy of such prophylaxis and b) the need for intensive care for BMT patients. If there is a fairly regular need, then at least one suitable room on ITU seems entirely reasonable. It may well be that the prophylaxis alternative may also come into play when there are two BMT patients in need of intensive care of if an airborne infectious BMT patient needs to be cared for on ITU. There could always be the option of a HEPA-supply positive pressure room with a negative pressure lobby as a (partial?) solution. This would contain most of the air but with the possibility of small leaks to areas adjacent to the positive pressure room.

"There is a pentamidine room which is required to be at negative pressure (currently its not: however being reviewed) : my understanding is the pressure should be between -1 and -2: is this correct and are there any other controls required within this room?" This is a matter of chemical safety and outside my IPC remit, but I would have thought that pressures as low as 1-2 pascals give unreliable protection a) as they would easily be reversed by outside forces (moderate to high winds) and were unreliable to measure e.g. if a micromanometer's zero setting slips a bit, say to a reading of -3, then a room that appears negative could actually be positive. I would have thought that 10 – 20 pascals was more robustly safe. This facility would probably be classed as "local exhaust ventilation" under health safety law: http://www.hse.gov.uk/pubns/priced/hsg258.pdf particularly paragraphs 110 onwards.

"For patients who are in the positive (non lobbied) rooms that are considered infectious: as there are no lobbied rooms within this unit, the proposal would be that these patients would be transferred to the renal unit: which has a positive pressure room with a DH positive pressure ventilated lobby. What is your thoughts on the suitability of these rooms for this purpose?" If all the patients are in positive pressure rooms, then if one of them were an airborne infectious risk to the others, these others would all be in their protective positive pressure room and protected from the infectious patient. If the infectious patient were a risk to the staff, then moving that patient to a room where the infectious aerosol were contained and diluted would be appropriate. I don't understand "a positive pressure room with a DH positive pressure ventilated lobby". If this is an HBN4 supplement 1 suite, then the patient room is "neutral" pressure, meaning neither intentionally positive or negative but it will be (unpredictably) one or the other. If the air supplied to the lobby is not HEPA filtered, the patient is not protected against fungal spores. If the room is at any negative pressure, the patient is not protected against fungal spores. If I have understood the situation correctly, such rooms would not offer protection.

"We have also been asked to comment on the validation of each of these rooms as the guidance relating to validation in HBN 04-01 refers to PPVL rooms; and these rooms are not PPVL". The validation would be locally determined (there being no national guidance) and would depend on the eventual specification of "these rooms". If the rooms are as I am currently envisaging, it would be along the lines of: HEPA filters do not allow the passage of particles (standard test on fitting HEPAs); the rooms are monitored as being positive pressure with a local alarm if pressure falls with a (5 minutes?) delay; the rooms leak outwards via all gaps in their fabric (bespoke testing: a) finding such gaps and b) looking at smoke movement direction through those gaps. Probably best done by someone who is skilled at assessing micro containment level 3 labs for ability to be safely fumigated. Can discuss in more detail later); fungal active air sampling would be reassuring. Advise do not specify validation until design established.

Regards,
Peter

****
****

This message may contain confidential information. If you are not the intended recipient please inform the
sender that you have received the message in error before deleting it.
Please do not disclose, copy or distribute information in this e-mail or take any action in reliance on its contents:
to do so is strictly prohibited and may be unlawful.

Thank you for your co-operation.

NHSmail is the secure email and directory service available for all NHS staff in England and Scotland
NHSmail is approved for exchanging patient data and other sensitive information with NHSmail and GSi recipients
NHSmail provides an email address for your career in the NHS and can be accessed anywhere

****
****
****

NHSGG&C Disclaimer
The information contained within this e-mail and in any attachment is confidential and may be privileged. If you are not the intended recipient, please destroy this message, delete any copies held on your systems and notify the sender immediately; you should not retain, copy or use this e-mail for any purpose, nor disclose all or any part of its content to any other person.
All messages passing through this gateway are checked for viruses, but we strongly recommend that you check for viruses using your own virus scanner as NHS Greater Glasgow & Clyde will not take responsibility for any damage caused as a result of virus infection.
****

Request for Information - Section 21 Notice - No 18 (Ventilation Systems)

1. **<u>Physical changes to the ventilation system operation:</u> From handover on 26 January 2015 to date, please provide: -**

a) **A list of all physical changes made by the Board to the operation of ventilation system which were made as a result of concerns about its safety or as a result of a hypothesis/risk but not a known safety concern. For the avoidance of doubt, this request includes permanent and interim steps taken to rectify, remediate, or upgrade the ventilation system.**

b) **A succinct explanation of the reason why each of the steps identified was taken.**

c) **A description of any steps that the Board took to install HEPA filtration. The Inquiry would like to understand the position at handover and the current position in the Hospital. For the avoidance of doubt, this request includes permanent and interim steps taken to rectify, remediate or upgrade the HEPA filtration. This should include any steps that were taken to use mobile HEPA filtration units.**

QEUH Ward 4B

This response seeks to address the information requested about physical changes to the ventilation system operation specifically for QEUH Ward 4B. This response should be read in conjunction with RFI 10, question 4b submitted on 2 Dec 2022 which is relevant to this response along with the other RFI responses referred to within it including, the "QEUH Adult Bone Marrow Transplant Unit (BMTU/ward 4B) timeline provided in response to RFI 7, and the "Adult BMT Key dates.doc", provided in response to RFI 1 – 6. Information previously provided may not have been duplicated in the response below.

Ward 4B is served by 31AHU63 located in plantroom 31. Following the transfer of patients from Beatson to Ward 4B QEUH in June 2015, the Consultant Microbiologists expressed concern that the ventilation standards in Ward 4B patient rooms and corridor spaces did not meet the required standard for BMT accommodation. The primary issues were the air change rate, pressure cascades in rooms and corridors, and the room permeability. To allow remedial works to be undertaken, the patients were transferred back to the Beatson in July 2015. This enabled works to both the AHU serving Ward 4B and within the rooms to be undertaken.

The primary change to the ventilation system was installation of a more powerful fan motor increasing the volume of air delivered to the space. This assisted in delivering the desired room pressure differentials and an increase in air change rates. The ceiling in the patient bedroom was changed from tiled grid to solid plasterboard to assist improvement in air

pressure. The en-suite ceiling was not changed at this time. The air delivery to the rooms was via HEPA terminal grilles and all HEPA terminal filters were replaced on completion of the works. To assist staff in the monitoring the room pressures, digital gauges were fitted external to the rooms and alarms were fitted at the nurse station. On completion of the works, the rooms were validated and offered to NHSGGC for use. Following the validation in October 2015, the microbiologists requested air sampling and they were not satisfied with the outcomes. As a consequence, the patient group remained at the Beatson.

To prepare the space for use by a different patient group, the ventilation system serving patient rooms in Ward 4B was rebalanced to reduce the pressure cascade within the rooms from positive to neutral.

Within the extended ward area the pentamidine and intrathecal treatment rooms are served by AHU 06 located in plantroom 121 on level 12. The pentamidine room requires to have a negative pressure and the intrathecal room requires a positive pressure. Tests undertaken by microbiologists in December 2015 recorded that the Pentamidine treatment room was showing a positive pressure from room to corridor. The specification provided for this room required negative pressure from corridor to room. The room is served by AHU 06 on level 12. To achieve the correct negative pressure cascade, the extract motor within AHU 06 was changed. HEPA filtration to the pentamidine room is provided by a floor standing unit.

In 2017, a further SBAR was raised by microbiologists to have the ceilings within the patient room en-suites upgraded from ceiling tile grids to solid plasterboard ceilings. This work was undertaken in several phases and the rooms and spaces were finally validated in November 2017. The air change rates and pressure cascades recorded were accepted by microbiologists however further air sampling was requested to ensure the area was suitable for the patient group to be returned from the Beatson. The patients returned from the Beatson to QEUH in June 2018.

In 2019 a request was made to install HEPA filtration in the 4B storeroom. This required minor alterations to the ductwork within the storeroom ceiling and the work was done under HAI SCRIBE control.

The Ceiling Ventilation Grilles were removed from the corridor area of ward 4B during the 2019 verification.

QEUH Estates, Ward 4b Works: 2017 Sep-Nov				Scheduling			Week 1							Week 2							Week 3					Week 4					Week 5					Week 6	
No		SCHEMES ACTIVE: Ward 4b	Scope of Works	Start	End	Indicative Positioning																														
1	QEUH	**Phase 1, 11 rooms, 18/9/17**	Set up HAI Scribe partition, Commence ceiling works. Carry out flushing of unused water outlets as per spreadsheet.	**Week 1**	7 days	Active	**Day 1**	**Day 2**	**Day 3**	**Day 4**	**Day 5**	**Day 6**	**Day 7**																								
		MPMH																																		
2	QEUH	**Phase 1, 11 rooms continuation, 25/9/17**	Continuation of ceiling works and flushing of unused water outlets as per spreadsheet. Carry out deep clean on completion of works.	**Week 2**	7 days	Planned								**Day 1**	**Day 2**	**Day 3**	**Day 4**	**Day 5**	**Day 6**	**Day 7**																	
		MPMH																																		
3	QEUH	**Phase 2, 5 rooms continuation, 2/10/17**	Set up HAI Scribe partition, Commence ceiling works. Carry out flushing of unused water outlets as per spreadsheet. Carry out deep clean on completion of works	**Week 3**	5 days	Planned															**Day 1**	**Day 2**	**Day 3**	**Day 4**	**Day 5**										
		MPMH																																		
4	QEUH	**Phase 3, 8 rooms, 9/10/17**	Set up HAI Scribe partition, Commence ceiling works. Carry out flushing of unused water outlets as per spreadsheet. Carry out deep clean on completion of works	**Week 4**	5 days	Planned																				**Day 1**	**Day 2**	**Day 3**	**Day 4**	**Day 5**						
		MPMH																																		
5	QEUH	**Phase 3, 8 rooms, 16/10/17**	Continuation of ceiling works and flushing of unused water outlets as per spreadsheet. Carry out deep clean on completion of works.	**Week 5**	5 days	Planned																									**Day 1**	**Day 2**	**Day 3**	**Day 4**	**Day 5**		
		MPMH																																		
6	QEUH	**Hepa Filter Replacement, 23/10/17**	ALL 24 Room HEPA Filters to be replaced and a new Hepa filter to be installed into the Prep Room. Validation of Pentamidine Room to be included.	**Week 6**	5 days	Planned																													**Day 1**	**Day 2**
		H&V																																		
7	QEUH	**Air permeability Tests, 30/10/17**	Integrety tests & validation works	**Week 7**	5 days	Planned																														
		RSK and H&V																																		

QUEEN ELIZABETH UNIVERSITY HOSPITAL

QEUH – WARD 4B

VENTILATION REPORT

Area:	Queen Elizabeth University Hospital	**AHU:**	31AHU63
Client:	NHS Greater Clyde & Glasgow	**Client Contact:**	David Brattey
Site Address:	1345 Govan Rd, Glasgow, G51 4TF	**Report No:**	A11356
System Condition:	Good	**Date of Test:**	6th - 10th November 2017
Test Engineer & Report Preparation:	Daniel Kane	**Signature:**	[redacted]
H&V Approval:	Ian Stewart	**Signature:**	[redacted]
Client Reviewed by:	David Brattey	**Signature:**	

KILKNOWE OFFICE
16 BARRMILL ROAD
GALSTON
AYRSHIRE
KA4 8HH

QUEEN ELIZABETH UNIVERSITY HOSPITAL

Table of Contents

1. Scope of Works
2. Executive Summary
3. Supply & extract flow rates & air change rates
4. Filter Integrity Test
5. Room Pressure Differentials
6. Schematic Layout of Adults Ward 4B
7. Calibration Certificates

Section 1 – Scope of Works

Adults Ward 4B is located on the 4th floor in Queen Elizabeth University Hospital. Adults Ward 4B is supplied by 3 Air Handling Units located on level 3 plant room, just below one level from the department.

Main traverse readings will be taken from both the supply and extract ducts and the invertor readings recorded.

To ensure compliance with SHTM03-01, the following tests will be carried out;

1 - Supply volume flow rates from each terminal grille and air change rates calculated.
2 – Record room pressures and compare with the Digital Pressure Panel
3 – DOP integrity test all supply HEPA filters
4 – Provide an electronic validation report

.

Section 2 – Executive Summary

Recorded the supply volumes and calculated the air change rates, all achieve or are acceptable to the required specification.

The room pressures are above the minimum required limits.

The change of HEPA filters in each individual Isolation Room was carried out and old filters boxed ready for disposal.

The DOP Filter integrity test all HEPA Filters was carried out. All filters achieved an integrity of 99.99% MPPS.

Section 3 – Air Volumes & Air Change Rates

Air Volume Methodology

Objective:

To provide documented evidence to verify the supply air volume rates through individual filter terminals are in accordance with their design volumes.

Prerequisites – Supply and Extract Air Handling Unit maintenance complete.

Test Method

- Micromanometer – calibrated and used in conjunction with Pitot tube to measure air velocity in appropriate ducting, to calculate air volume for Balometer factor.
- The HVAC System(s) is operational and stable.

Methodology:

- Hold the balometer hood over the diffuser/grille face and ensure balometer is set in the correct direction and read off the measured air volume flow rate.

Acceptance Criteria

- Calibration certificates for all test equipment are appended to the report.

Room Air Change Rate Calculation Methodology

Objective

To provide documented evidence to verify the room air change rate to each room within the Area based on measurement of the total supply air volume to the room in accordance with the design specification.

Pre-Requisites

- The tests described in the air volume methodology have been completed.

Methodology

- Insert all supply air volumes into the results table.
- Calculate the total supply air volume to each room by the addition of all supply HEPA filter flow rates within the room.
- Calculate the air change rate per hour for each room using the following equation:

$$\frac{\text{Total volume of all supply terminal HEPA filter flowrates } (m^3/h)}{\text{Volume of the room } (m^3)}$$

Acceptance Criteria

- All rooms must achieve the minimum number of air change rates specified in the design data.

QUEEN ELIZABETH UNIVERSITY HOSPITAL

Section 3 – Air Volumes & Air Change Rates

AHU Invertor Readings & Filter Pressure Drops

AHU 31-63		Primary Filter PD	55Pa
Supply Invertor	44Hz (A)	Secondary Filter PD	120Pa
Extract Invertor	30Hz (B)	Extract Filter PD	15Pa

Supply Duct Traverse

Test Point / Location	Design Volume m³/s	Duct Size mm	Duct Area m²	Design Velocity m/s
TP2 / 4th Floor Riser	0.899	700 x 350	0.245	3.67
	A	B	C	D
1	6.10	4.70	5.00	7.00
2	5.80	3.90	5.30	6.30
3	5.60	3.60	5.10	4.30
4	5.60	3.50	5.10	4.40
Total	23.10	15.70	20.50	22.00
Overall Total		81.30		
Average Velocity m/s	Test Volume m³/s	% Design	Static Pressure Pa	
5.08	1.245	139	380	

Test Point / Location	Design Volume m³/s	Duct Size mm	Duct Area m²	Design Velocity m/s
TP1 / 4th Floor Riser	1.04	500 x 500	0.25	4.16
	A	B	C	
1	5.96	5.70	5.00	
2	5.48	5.90	5.30	
3	5.31	5.20	5.10	
4	5.15	5.60	5.10	
Total	21.90	22.40	20.50	
Overall Total		64.80		
Average Velocity m/s	Test Volume m³/s	% Design	Static Pressure Pa	
5.40	1.35	130	369	

QUEEN ELIZABETH UNIVERSITY HOSPITAL

Section 3 – Air Volumes & Air Change Rates

Extract Duct Traverse

Test Point / Location	Design Volume m³/s	Duct Size mm	Duct Area m²	Design Velocity m/s
Main TH	1.392	700 x 450	0.315	4.42
	A	B	C	D
1	3.80	3.20	3.30	3.90
2	3.30	3.40	3.50	3.10
3	3.60	2.50	2.50	2.80
4	3.60	2.50	2.10	2.00
Total	14.30	11.60	11.40	11.80
Overall Total		49.10		
Average Velocity m/s	Test Volume m³/s	% Design	Static Pressure Pa	
3.069	0.967	69	120	

AHU Invertor Readings & Filter Pressure Drops

AHU 31-63EF01			
Extract Invertor	70Hz (B)	Extract Filter PD	15Pa

Extract Main Test Point

Test Point / Location	Design Volume m³/s	Duct Size mm	Duct Area m²	Design Velocity m/s
Main TH	0.698	500 x 350	0.175	3.99
	A	B	C	
1	6.00	5.80	5.80	
2	5.70	6.00	5.80	
3	5.80	5.70	5.90	
4	5.70	5.90	5.80	
Total	23.20	23.40	23.30	
Overall Total		69.90		
Average Velocity m/s	Test Volume m³/s	% Design	Static Pressure Pa	
5.825	1.019	146	204	

Extract Test Point

Test Point / Location	Design Volume m³/s	Duct Size mm	Duct Area m²	Design Velocity m/s
TH1	0.0898	250 ϕ	0.0491	1.83
	A	B		
1	1.90	1.80		
2	2.00	1.90		
3	1.90	2.20		
4	1.90	1.70		
Total	7.70	7.60		
Overall Total		15.30		
Average Velocity m/s	Test Volume m³/s	% Design	Static Pressure Pa	
1.9125	0.0939	105	9	

Section 3 – Air Volumes & Air Change Rates

Supply Grille Volume Flow Rates

Room	Room ID	Test Volume		Design Volume l/s	% of Design
		m³/hr	l/s		
76	A4-HOW-190	324	90	80	113
77	A4-HOW-193	392	109	80	136
78	A4-HOW-195	324	90	80	113
79	A4-HOW-198	364	101	80	126
80	A4-HOW-202	385	107	80	134
81	A4-HOW-050	324	90	80	113
82	A4-HOW-053	302	84	80	105
83	A4-HOW-055	338	94	80	118
84	A4-HOW-058	328	91	80	114
85	A4-HOW-059	306	85	80	106
86	A4-HOW-062	385	107	80	134
87	A4-HOW-064	342	95	80	119
88	A4-HOW-067	335	93	80	116
89	A4-HOW-031	403	112	100	112
90	A4-HOW-029	407	113	80	141
91	A4-HOW-026	371	103	80	129
92	A4-HOW-024	382	106	80	133
93	A4-HOW-021	317	88	80	110
94	A4-HOW-020	310	86	80	108
95	A4-HOW-017	317	88	80	110
96	A4-HOW-015	396	110	80	138
97	A4-HOW-012	356	99	80	124
98	A4-HOW-011	392	109	80	136
99	A4-HOW-009	378	105	80	131

Section 3 – Air Volumes & Air Change Rates

Extract Grille Volume Flow Rates

Room	Room ID	Test Volume		Design Volume l/s	% of Design
		m³/hr	l/s		
76	A4-HOW-190	104	29	30	97
77	A4-HOW-193	104	29	30	97
78	A4-HOW-195	115	32	30	107
79	A4-HOW-198	108	30	30	100
80	A4-HOW-202	104	29	30	97
81	A4-HOW-050	94	26	30	87
82	A4-HOW-053	104	29	30	97
83	A4-HOW-055	126	35	30	116
84	A4-HOW-058	90	25	30	83
85	A4-HOW-059	95	26	30	87
86	A4-HOW-062	126	35	30	116
87	A4-HOW-064	94	26	30	87
88	A4-HOW-067	86	24	30	80
89	A4-HOW-031	94	26	30	87
90	A4-HOW-029	86	24	30	80
91	A4-HOW-026	108	30	30	100
92	A4-HOW-024	108	30	30	100
93	A4-HOW-021	108	30	30	100
94	A4-HOW-020	108	30	30	100
95	A4-HOW-017	94	26	30	87
96	A4-HOW-015	94	26	30	87
97	A4-HOW-012	112	31	30	103
98	A4-HOW-011	108	30	30	100
99	A4-HOW-009	97	27	30	90

Section 3 – Air Volumes & Air Change Rates

31-63/EF01 Extract Volume Flow Rates

Room	Grill Reference	Test Volume		Design Volume l/s	% of Design
		m³/hr	l/s		
Corridor Area	512-EG002	346	96	90	107
Corridor Area	514-EG008	274	76	75	101
Corridor Area	513-EG006	281	78	75	104
Corridor Area	513-EG008	284	79	75	105
Corridor Area	514-EG009	360	100	75	133
Corridor Area	513-EG007	310	86	77	112
Corridor Area	513-EG004	342	95	63	151
Corridor Area	513-EG003	328	91	55	165
Corridor Area	513-EG002	328	91	54	169
Corridor Area	513-EG001	389	108	60	180

125AHU05 Clean Utility Volume Flow Rates

Room	Grill Reference	Test Volume		Design Volume l/s	% of Design
		m³/hr	l/s		
Clean Utility	Supply Grille	131	36	tbc	107
Clean Utility	Extract Grille	130	36	Tbc	101

Pentamidine Treatment Room Volume Flow Rates

Room	Grill Reference	Test Volume		Design Volume l/s	% of Design
		m³/hr	l/s		
HOW-003	Supply Grille	284	79	tbc	107
HOW-003	Extract Grille	395	110	Tbc	101

QUEEN ELIZABETH UNIVERSITY HOSPITAL

Section 3 – Air Volumes & Air Change Rates Continued……

Air Change Rates

Room Reference	Recorded Air Volume m³/hr	Room Volume m³	Recorded ac/hr	Design Air Change Rates ac/hr
Room 76	324	45.9	7.1	6
Room 77	392	45.9	8.5	6
Room 78	324	45.9	7.1	6
Room 79	364	45.9	7.9	6
Room 80	385	54.0	7.1	6
Room 81	324	48.6	6.7	6
Room 82	302	45.9	6.6	6
Room 83	338	45.9	7.4	6
Room 84	328	48.6	6.7	6
Room 85	306	48.6	6.3	6
Room 86	385	45.9	8.4	6
Room 87	342	45.9	7.5	6
Room 88	335	45.9	7.3	6
Room 89	403	45.9	8.8	6
Room 90	407	45.9	8.9	6
Room 91	371	48.6	7.6	6
Room 92	382	48.6	7.3	6
Room 93	317	48.6	6.5	6
Room 94	310	48.6	6.4	6
Room 95	317	45.9	6.9	6
Room 96	396	45.9	8.6	6
Room 97	356	48.6	7.3	6
Room 98	392	48.6	8.1	6
Room 99	378	64.80	5.8	6
Clean Utility	131	36.4	3.6	6
Pentamidine	395	45.3	8.7	6
A balometer factor of 1.0 was used.				

Equipment Used

Test Instruments Used	Serial No.	Calibration Due
Balometer	90526046	September 2018

Section 4 – Filter Integrity Test

Objective

To provide documented evidence to verify that each HEPA filter installation within the HVAC System(s), comprising the filter, seal and housing, does not permit the passage of particulate material in sufficient quantities to compromise the design intent of the filter. This will be achieved by smoke integrity testing.

Prerequisites

- **Aerosol generator** – calibrated to be capable of generating a poly-dispersed aerosol having the size distribution given in PD6609:2000 Annex B, Clause C.2.1.
- **Photometer** – calibrated and suitable for the measurement of mass concentration of airborne particles having the size distribution given in PD6609:2000 Annex B, Clause C.2.1 and having an accuracy of better than ±5% over the range of a five expandable, six decade resolution and a minimum threshold sensitivity 0.0001µg/l and capable of measuring aerosol concentration in the range of 10 to 100mg/m³. The photometer shall have a sample flow rate 0.4 ± 0.05 l/s
- **Sampling probe** - a suitable sampling probe is required which is designed for maximum coverage of isokinetic flow rates.
- **Calibration certificates** – are required for the above and must be appended to the test report.

Methodology

The test will be performed by introducing an aerosol challenge upstream of each HEPA filter and scanning immediately downstream of the filters and support frame.

A test report will be prepared which will include confirmation of the methodology used, results of testing for each filter, whether each test is a **pass** or **fail**, the location of any detected leaks and indication of the position and extent of any repairs and calibration certificates for all test equipment used.

Acceptance Criteria

- Aerosol concentration readings must be $\leq$ 0.01 % of the upstream concentration within all grade of rooms.
- A test report is prepared which includes confirmation of the methodology used, results of testing for each filter, whether each test is a **pass** or **fail.** If a fail is recorded replace the filter and retest.
- Attach copy of calibration certificates for all test equipment.
-

QUEEN ELIZABETH UNIVERSITY HOSPITAL

Section 4 – Filter Integrity Test

Filter Integrity Results

Room	Room Reference ID	Filter Pressure Drop Pa	Set Upstream Concentration mg/m³	Downstream % penetration	% Upstream Aerosol Concentration Post Scan	Pass/Fail
76	A4-HOW-190	New Filter	47	0.0001	100	Pass
77	A4-HOW-193	New Filter	52	0.0004	97	Pass
78	A4-HOW-195	New Filter	28	0.0001	98	Pass
79	A4-HOW-198	New Filter	67	0.0003	102	Pass
80	A4-HOW-202	New Filter	63	0.0009	100	Pass
81	A4-HOW-050	New Filter	34	0.0001	97	Pass
82	A4-HOW-053	New Filter	40	0.0002	100	Pass
83	A4-HOW-055	New Filter	46	0.0008	103	Pass
84	A4-HOW-058	New Filter	78	0.0005	101	Pass
85	A4-HOW-059	New Filter	65	0.0007	100	Pass
86	A4-HOW-062	New Filter	80	0.0009	100	Pass
87	A4-HOW-064	New Filter	88	0.0003	102	Pass
88	A4-HOW-067	New Filter	82	0.001	100	Pass
89	A4-HOW-031	New Filter	77	0.0002	103	Pass
90	A4-HOW-029	New Filter	74	0.0004	104	Pass
91	A4-HOW-026	New Filter	80	0.0009	100	Pass
92	A4-HOW-024	New Filter	64	0.0003	99	Pass
93	A4-HOW-021	New Filter	80	0.001	102	Pass
94	A4-HOW-020	New Filter	63	0.0008	102	Pass
95	A4-HOW-017	New Filter	21	0.0001	100	Pass
96	A4-HOW-015	New Filter	28	0.002	101	Pass
97	A4-HOW-012	New Filter	39	0.003	100	Pass
98	A4-HOW-011	New Filter	31	0.004	98	Pass
99	A4-HOW-009	New Filter	23	0.001	103	Pass
Clean Utility	HOW-039	New Filter	80	0.007	100	Pass

Test Instruments Used	Serial No.	Calibration Due
Photometer	11200	March 2018
Aerosol Generator	12198	June 2018

Section 5 - Room Pressure Differentials

Room Pressure Differential Methodology

Objective

To provide documented evidence to verify the room pressure regime throughout the Cleanroom suite is in accordance with their design values.

Pre-Requisites

All supply and extract volumes are set to client specification

- All LAF unit(s) are operational, where applicable.
- The HVAC System(s) must have been operating normally and continuously for at least 24 hours prior to commencement of the test.
- The tests are to be carried out “unmanned at rest”. Ensure that area supervision have been informed to keep personnel out of the area.
- The test operator has been trained to use the test equipment and is wearing appropriate clean area clothing.
- Room pressure alarms/information;
    - High room pressure set at 15Pa
    - Low room pressure alarm set at 5Pa
    - Door open or out of specification alarm is set for a 2 minute period before alarming.
    - Room pressure alarms can be silenced from the button on the digital display set at each room door entry (on the stainless steel plate).

Methodology

- With the Micromanometer properly zeroed, attach the tubing to the positive connection on the instrument, then place the other end of the tubing underneath the room door, with the tubing going into the higher pressured room.
- Record the reading into the appropriate position on the table below.

QUEEN ELIZABETH UNIVERSITY HOSPITAL

Section 5 - Room Pressure Differentials

Room Pressure Differentials, Temperature, Humidity & Noise Levels

Room	Room	Recorded Pressure Pa	Target Pa	Recorded Temp Target 18-28ºC	Recorded Noise Target 35dba
Room 76	Corridor	7.6	5 – 10	23.5	28.2
Room 77	Corridor	7.0	5 – 10	23.2	29.5
Room 78	Corridor	6.8	5 – 10	25.0	30.0
Room 79	Corridor	9.2	5 – 10	23.9	31.0
Room 80	Corridor	7.4	5 – 10	23.5	29.8
Room 81	Corridor	7.0	5 – 10	22.4	29.2
Room 82	Corridor	8.1	5 – 10	21.0	29.0
Room 83	Corridor	9.4	5 – 10	20.0	29.7
Room 84	Corridor	8.7	5 – 10	23.4	32.0
Room 85	Corridor	7.2	5 – 10	22.9	31.1
Room 86	Corridor	8.6	5 – 10	23.1	28.0
Room 87	Corridor	8.4	5 – 10	23.5	29.5
Room 88	Corridor	8.4	5 – 10	19.8	30.2
Room 89	Corridor	8.5	5 – 10	19.3	28.4
Room 90	Corridor	8.4	5 – 10	23.6	29.7
Room 91	Corridor	10.0	5 – 10	18.9	29.3
Room 92	Corridor	11.2	5 – 10	19.2	28.5
Room 93	Corridor	8.3	5 – 10	27.7	29.6
Room 94	Corridor	7.4	5 – 10	19.8	29.8
Room 95	Corridor	13.0	5 – 10	22.9	27.4
Room 96	Corridor	10.6	5 – 10	23.2	28.2
Room 97	Corridor	7.2	5 – 10	19.3	28.1
Room 98	Corridor	7.5	5 – 10	19.8	29.6
Room 99	Corridor	6.5	5 – 10	22.2	27.9
Clean Utility	Corridor	0.5	+	-	-
Ward 4B	Link Corridor	6	+	-	-
Ward 4B	Ward 4C	6	+	-	-
Ward 4B	Stairwell	4	+	-	-

Equipment Used

Test Instrument Used	Serial Number	Calibration Due Date
Micromanometer	7827	November 2017
Environmental Meter	160506299	September 2018

QUEEN ELIZABETH UNIVERSITY HOSPITAL

Section 6 – Ward 4B Schematic

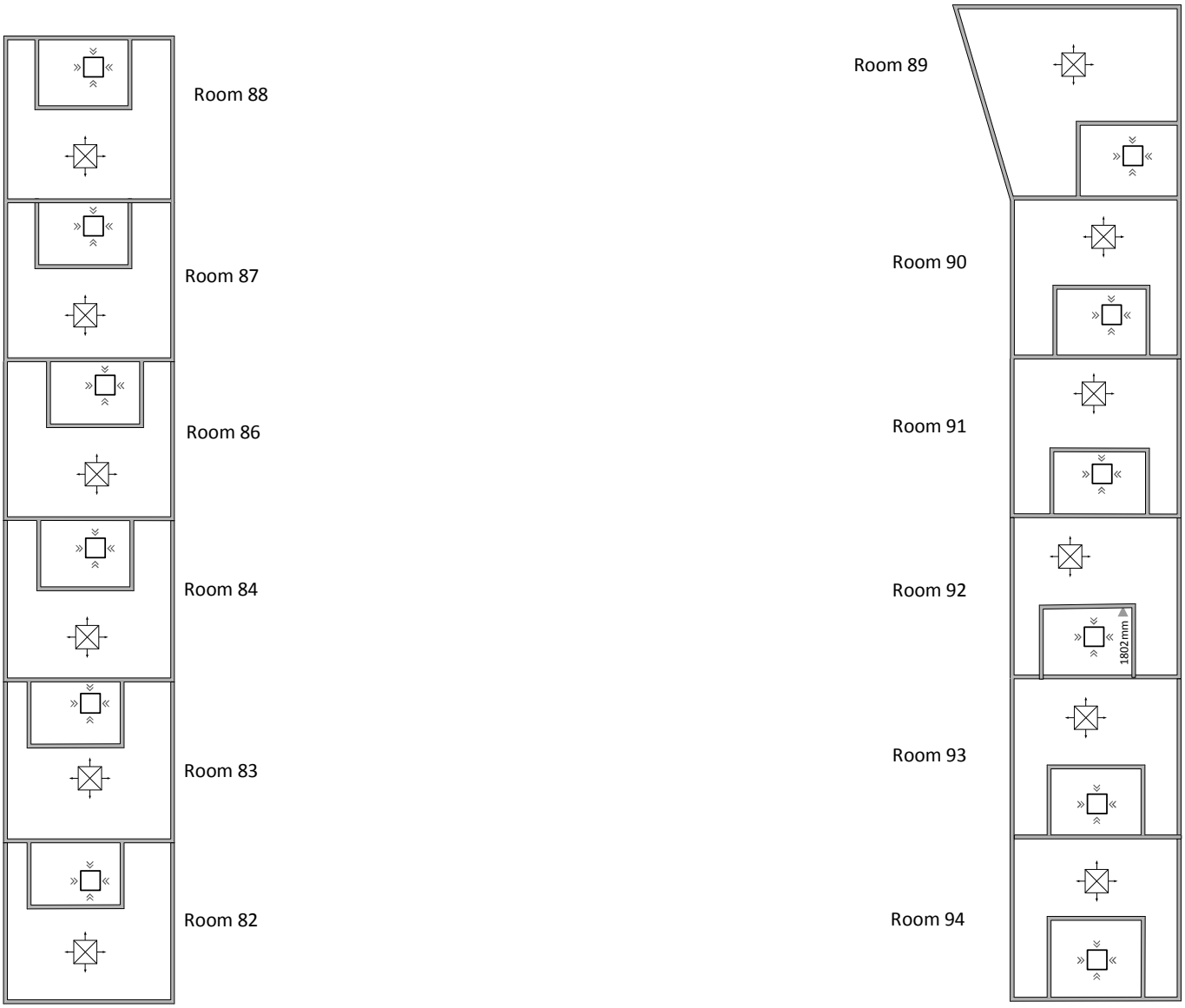

QUEEN ELIZABETH UNIVERSITY HOSPITAL

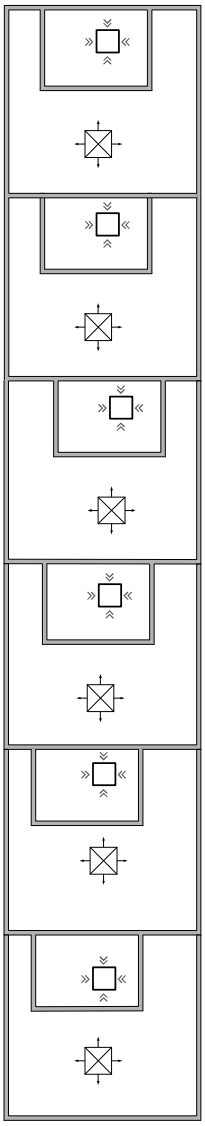

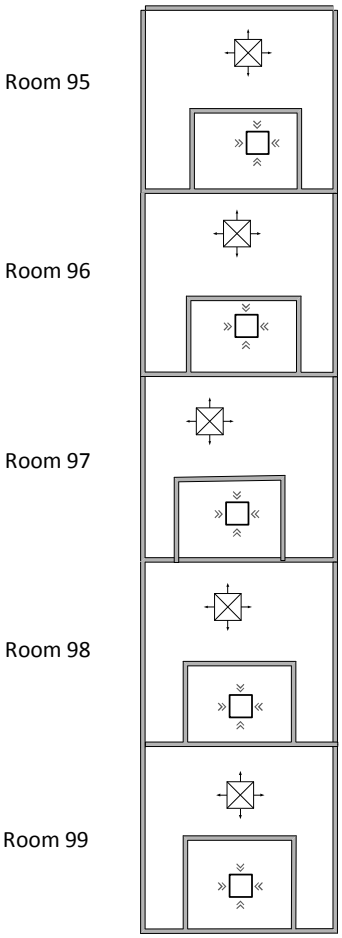

QUEEN ELIZABETH UNIVERSITY HOSPITAL

Section 7 - Calibration Certificates

CERTIFICATE OF CALIBRATION

Issued By IRC Ltd

Date of Issue 19 September 2017

Certificate Number
224854

Instrument Repairs & Calibration
7 Howard Court Industrial Estate
East Kilbride, G74 4QZ
Tel: 01355 264120 Fax: 01355 264150
www.instrument-repairs.com

Approved Signatory
[redacted]
Digitally signed by Keith Low
DN: cn=Keith Low, o=IRC Ltd, ou=IRC Ltd, email=[redacted] c=GB
Date: 2017.09.19 11:21:41 +01'00'

☐ N.Anderson ☐ K.Low ☐ C.Moore ☐ A.Rae

Customer : H&V Commissioning Services Ltd
Kilknowe Offices, 16 Barrmill Road
Galston KA4 8HY

Date Received : 07 September 2017

Instrument -

System ID :	IRC02204	Job Number :	R87915
Description :	Balometer	Ref. Number :	AC-C-06
Manufacturer :	Alnor	Site :	
Model Number :	EBT-721	Location :	
Serial Number :	90526046	Last Certificate Number :	
Procedure Version :	2592	Last Calibration Date :	

Environmental Conditions

Temperature :	23°C +/- 2°C	Mains Voltage :	230V +/- 10V
Relative Humidity :	50% +/- 20%	Mains Frequency :	50Hz +/- 1Hz

Comments

A. All prime parameters found to be within specification.
Results at the time of test carry no long term stability of the instrument.
This certificate records the ON RECEIPT calibration status.
Recalibration period 52 weeks by customer request.

Traceability Information

Instrument description	*Serial number*	*Certificate number*	*Cal. Date*	*Cal. Period*
Mensor CP6000	610020	13027/8/9/30/33	09/11/2015	104

Calibrated By : K Low

Date of Calibration : 19 September 2017

This is to certify that the above instrument was fully calibrated. Work carried out was in accordance with procedures laid down in BS EN ISO/IEC 17025:2005.
The accuracies of the standards used are traceable to National Standards,via UKAS approved laboratories.
The copyright of this certificate is owned by IRC Ltd and may not be reproduced except with the prior written approval of the issuing laboratory.
The reported expanded uncertainty is based on a standard uncertainty multiplied by a coverage factor k=2 providing a level of confidence of approximately 95%.

CERTIFICATE OF CALIBRATION

Certificate Number
224854

Test Title	Tolerance	Applied Value	Reading	Pass/Fail
Pressure				
Pascals	2.8pa	249.0pa	250.0pa	Pass
	22.9pa	1 992.0pa	1 995pa	Pass
	40.4pa	3 736.0pa	3 737pa	Pass

End of Results

Uncertainties

Pressure TE69	0- 1000mBar +/- 0.01% of reading

TRACEABLE CERTIFICATION & CALIBRATION REPORT

Digital Aerosol Photometer

Customer : H & V Commissioning Services, Kilknowe Office, 16 Barrmill Road, Galston, Ayshire

P.O#

Envirtonmental Conditions		
Temperature	22.4	°C
Ambient Pressure	100	kPa

Model	ATI-2G
Serial No.	11200
ID#	2248

Calibration Equipment			
	Multimeter	Electronic Balance	Flowmeter
Model	U3402A	HP220DC	Flow Meter
Serial Number	MY50060007	D455800028	F165086/01
Cal Due Date	Apr-17	May-17	Oct-18

Calibration Data

Volumetric Flow: L/min ± 5% of reading

Test Point	Measurement	2G Output	ABS ERROR	Allowed ERROR	Cal status
As Found	28.30	27.60	0.70	1.4	Pass
As Left	28.30	28.20	0.10	1.4	Pass

Stray Light: Volts

	As Found	As Left
Stray Light	0.0027	0.0076

P1 = ONDINA Concentration: 100 µg/L +/- 10% of Reading*

Test Point	Generator	2G Output	ABS ERROR	ALLOWED ERROR	CAL Status
As Found	100.00	81.30	18.70	10	Fail
As Left	100.00	100.60	-0.60	10	Pass

P2 = Emery Concentration: 100 µg/L +/- 10% of Reading*

Test Point	Generator	2G Output	ABS ERROR	ALLOWED ERROR	CAL Status
As Found	100.00	80.80	19.20	10	Fail
As Left	100.00	99.04	0.96	10	Pass

P3 = HIGH Concentration: 100 µg/L +/- 30µg/L

Test Point	Generator	2G Output	ABS ERROR	ALLOWED ERROR	CAL Status
As Found	100.00	85.00	15.00	30	Pass
As Left	100.00	103.00	-3.00	30	Pass

Notes:

Cleaned internal filters, tubing & rewired optical chamber lamp due to intermittent fault.

TUR 1:1

Condition of Unit

AS FOUND				AS LEFT			
☐	In tolerance	☐	Inoperable	☑	Calibrated as left	☐	New instrument
☑	Out of tolerance			☐	No calibration performed		

Maintenance Performed

☐	Rework scattering chamber	☑	Test scanning probe	☑	Leak Check	
☑	Clean Sampling System	☐	Test Absolute Filter	☐	Printer	
☐	Replace Cell Lamp	☐	Replace Gaskets	☑	Voltage Checks	
☑	Align Optics	☑	Tighten Loose Hardware	☑	Final Test	

Calibration Statement

The instrument listed on this certificate has been calibrated against standards traceable to NIST or other recognized national metrology institutes, derived from ratio type measurements, or compared to nationally recognized consensus standards. A test uncertainty ratio of 4:1 [k-2, approx. 95% confidence level] was maintained unless otherwise stated. All results contained within this certificate relate only to the item(s) calibrated. Any number of factors may cause the calibrated item to drift out of calibration before the instruments calibration interval has expired. This certificate shall not be reproduced except in full and with written consent of ATI. This unit has been calibrated to the most recent revision of PCL-030-WI .

Calibrated by	L . HANTEA	Signed	[redacted]
Cal Date	02 March 2017	Cal Due	02 March 2018

ATI UK Ltd
Unit 10
Protea way
Pixmore Avenue
Letchworth
Hertfordshire
SG6 1JT
United Kingdom

Telephone:
+44 (0)1462 676446
Facsimile:
+44 (0)1462 486078

Email: saleuk@atitest.com

Web:
www.atitest.co.uk

Registered Office
Unit 10
Protea way
Pixmore Avenue
Letchworth
Hertfordshire
SG6 1JT

Registered in England
No. GB 3889548

VAT Number
GB 770 8627 05000

OptiCal Sciences

CERTIFICATE OF COMPLIANCE AEROSOL GENERATOR

No G/29466

The Standards used have been calibrated by internal and external procedures traceable to National Standards.
This Aerosol Generator has been tested with Finavestan A80 B

Date of Calibration: 15-Jun-17		Model	Serial No
Customer	H & V Commisioning Services	CF Taylor	12198
Address	Kilknowe Office		
	16 Barrmill Road		
	Galston		
	KA4 8HH		
Service Report No 29466			

STANDARDS USED

INSTRUMENT DESCRIPTION	MANUFACTURER	SERIAL No	LAST RECAL	CERT NO
Photometer	Air Techniques	12076	19-Apr-17	29181
Airflow Meter	Airflow Developments	115135	19-May-17	12574
Airflow HLF Bench	Gelman Sciences	9436-89	25-Nov-16	28644
Electrical Safety Tester	Martindale MPAT+	78491386	27-Apr-17	386428
Aerosol Diluter	Air Techniques	13940	27-Jul-16	28001

AEROSOL OUTPUT CONCENTRATION RESULTS

Inlet Bottle Pressure (PSI)	Oil Flow Valve	Heater Block Temperature (°C)	HLF Bench Airflow (L/min)	Upstream Concentration (µg/L)
5	N/A	355	13,336.2	165
10	N/A	355	13,336.2	500
15	N/A	355	13,336.2	775
20	N/A	355	13,336.2	920
25	N/A	355	13,336.2	1,100
30	N/A	355	13,336.2	1,200

ELECTRICAL SAFETY TEST RESULTS

Test No: 0452	
Test Mode: Class one	
Visual: Pass	
Earth Test: 0.09Ω	
Insulation Test: ^19.9MΩ	
Load Test: 0.91KVA	
Leakage Test: 00.1mA	
FLOW RATE	
ATI TDA-5B	N/A LPM

CALCULATED RESULTS

Generator Output (g/min) = Upstream Concentration (µg/L) x HLF Bench Airflow (L/min) / 1,000,000

Pressure	Output (g/min)	Pressure	Output (g/min)
5psi	2.20	25psi	14.67
10psi	6.67	30psi	16.00
15psi	10.34		
20psi	12.27		

Out Of Limit Errors As Found. Comments: None.

[redacted]

Next Calibration Due 15-Jun-18 | Engineer A.Laurance

OptiCal Sciences Limited
Envirotest House
Anglia Way, Moulton Park Industrial Estate, Northampton NN3 6JA
Telephone: 0844 334 0100 Fax: 0844 334 0101 Email: info@optical-sciences.co.uk
Visit our Website at www.optical-sciences.co.uk

CERTIFICATE OF CALIBRATION

Issued By **Cuthbertson Laird Group**
Date of Issue **28 November 2016**
Date Received **22 November 2016**

Certificate Number
HAM13016

Cuthbertson Laird Group
Parkburn Court
Glasgow Road
Hamilton
ML3 0QQ

[redacted]

Approved Signatory
D. Semple

Electronically Signed

Customer : H & V Commisioning
16 Barmill Road
Ayrshire
Galston
KA4 8HH

Instrument -

System ID :	ID216
Description :	AutoZeroing Micromanometer
Manufacturer :	DPM
Model Number :	TT470S
Serial Number :	7827
Customer Ref:	
Procedure Version	2227

Environmental Conditions

Temperature :	20°C ± 1°C	Mains Voltage :	240V ± 10V
Relative Humidity :	50%RH ± 15%RH	Mains Frequency	50Hz ± 1Hz

Comments
This Certificate Records The On Receipt Calibration Status Of The Instrument.

Traceability Information

Instrument Description	*Serial Number*	*Certificate Number*	*Cal. Date*	*Cal. Period Weeks*
Air Neotronics MP6KS	0141232	20637	20/07/2015	104
Druck DPI142	2562944	24756	29/10/2016	52

Calibrated By : **D Semple**
Date of Calibration : **28 November 2016**

This is to certify the above instrument was fully tested and calibrated. Work carried out was in accordance with procedures laid down in BS EN ISO/IEC 17025:2005. The accuracies of the standards used are traceable to National Standards, via UKAS approved laboratories.

CERTIFICATE OF CALIBRATION

Certificate
HAM13016

Test Title	Applied Value	Reading	Uncertainties
Pressure			
7kPa	1.000kPa	1.01kPa	10Pa
7kPa	2.000kPa	2.01kPa	10Pa
7kPa	3.000kPa	3.01kPa	10Pa
7kPa	4.000kPa	4.02kPa	10Pa
7kPa	5.000kPa	5.03kPa	10Pa
7kPa	6.000kPa	6.03kPa	10Pa
1999Pa	400Pa	399Pa	1Pa
1999Pa	800Pa	798Pa	1Pa
1999Pa	1600Pa	1595Pa	1Pa
199.9Pa	40.0Pa	39.9Pa	0.1Pa
199.9Pa	80.0Pa	79.9Pa	0.1Pa
199.9Pa	160.0Pa	159.7Pa	0.1Pa
Velocity			
100m/s	5.0m/s	5.0m/s	1Pa
100m/s	10.0m/s	10.0m/s	1Pa
100m/s	25.0m/s	25.0m/s	1Pa
100m/s	50.0m/s	50.0m/s	1Pa

End Of Results

A49618520

CERTIFICATE OF CALIBRATION

Issued By **Cuthbertson Laird Group**
Date of Issue **04 September 2017**
Date Received **31 August 2017**

Certificate Number
HAM18771

Cuthbertson Laird Group
Parkburn Court
Glasgow Road
Hamilton
ML3 0QQ

[redacted]

Approved Signatory
D. Semple

Electronically Signed

Customer : H & V Commisioning
16 Barmill Road
Ayrshire
Galston
KA4 8HH

Instrument -

System ID :	ID23629
Description :	Environment Meter
Manufacturer :	Precision Gold
Model Number :	N09AQ
Serial Number :	160506299
Customer Ref:	
Procedure Version	2491

Environmental Conditions

Temperature :	20°C ± 1°C	Mains Voltage :	240V ± 10V
Relative Humidity :	50%RH ± 15%RH	Mains Frequency	50Hz ± 1Hz

Comments
This Certificate Records The On Receipt Calibration Status Of The Instrument.

Traceability Information

Instrument Description	*Serial Number*	*Certificate Number*	*Cal. Date*	*Cal. Period Weeks*
Pulsar P100B	035219	G002819	14/09/2016	52
Vaisala HMI41 Indicator	S1330009	A22418029-1	29/08/2017	52
Vaisala HMP41/45 Probe	J3215002	A22418029-1.	29/08/2017	52

Calibrated By : **D Semple**
Date of Calibration : **04 September 2017**

This is to certify the above instrument was fully tested and calibrated. Work carried out was in accordance with procedures laid down in BS EN ISO/IEC 17025:2005. The accuracies of the standards used are traceable to National Standards, via UKAS approved laboratories.

CERTIFICATE OF CALIBRATION

Test Title	Applied Value	Reading	Uncertainties
Sound Level Meter			
Lo C	94dB	92.8dB	0.6dB
Hi C	94dB	93.5dB	0.6dB
Hi C	104dB	103.3dB	0.6dB
Humidity Meter			
%Rh	47.2%Rh	44.8%Rh	1.6%Rh
Temperature Meter			
°C	21.1°C	21.3°C	0.33°C

End Of Results

109. Current issues

Julie Rothney

From:	Peters, Christine
Sent:	19 May 2020 17:51
To:	WALLACE, Angela (NHS FORTH VALLEY); PETERS, Christine (NHS AYRSHIRE AND ARRAN)
Cc:	INKSTER, Teresa (NHS GREATER GLASGOW & CLYDE); Jenny Copeland
Subject:	Current issues

Hi Angela,

As requested

NICU
Staph capitis – note 2 cases – IPCT say not in adjacent bed spaces, however we have had issues with this organism before – and one is not considered an HAI due to missing the definition by 2 hours ! Main concerns are : this is patient to pateitn , can be environmental dust associated, and may have a few strains at the same time – Teresa can forward information from outbreak management before and relevant literature.
Immediate Actions should include : hand hygiene and environmental audit .

Stenotrophomonas – 2 cases , thought not be outbreak by IPCT as only one HAI , however this fails to recognise that first could transmit to second (indirect) and has an impact on the burden on the unit.

Decontamination room

This was raised since 2015 and is relevant as still not sorted and recent impact on PPE decontamination options

ITU
Enterobacter – not clear what actions taken – initial response despite 2 BCs was that as ITU busy and under stress not being persued. However this has potential to impact significantl on our COVID mortality rate

Overall increase in gram negative infections and MRSA – has this been picked up by surveillance

Water results and actions post pseudomonas bacteraemia in ITU – no update to the Micro team

PICU

Ventilation – note from action plan is being followed up
Trough sinks were to be removed – is this followed up?
Note roof leaking – no clear analysis of issue

Would like to view the data on which the conclusion "no environmental links " is based important to grasp that direct typing matches in environmental outbreaks is rare.

Klebsiella Philipshill – national IMT with a local new case – what actions have been taken ?

PPE for porters – only use one pair of gloves all day – still in place – repeatedly raised by lab staff

Historical Issues with current potential consequence

1. PPVL - we now note this has been recognised as an issue in the issue log that you sent today – however getting HPS and HFS involved again is circular as they have previously reported – there is now an AECON report that should be alluded to and Jim Leiper report neither shared with Teresa while lead ICD (? Unsure

why that would be) Teresa infact requested an assessment by Prof Noakes which would be more useful. OF note the Court summons to Brookfeild identifies as an issue the flaws in the PPVL rooms that we identified in 2015

2. 4C – SBAR was approved by the specialist ventilation group for upgrade, however HSE request for upgrade challenged by GGC , of note residual risk to all high risk patients (Haematologists in agreement) of the current parameters.

3. 6A IMT – need a review of the epidemiology and the interventions in a timeline as to the correct lessons learned (I will forward an SBAR from the team here at the time)

4. Water group – taps – agreement re maintenance schedule – no evidence this is in place, replacement taps – where have they been put in? POC filters were originally meant to be in place on ITU – what is risk assessment re this not being carried out (as it never was), NiCU taps and sinks were to be replaced as follow up to Serratia.

5. Drain cleaning policy – outstanding

6. Education and awareness around sink hygiene in all areas.

7. Specialist ventilation group – NICU , SCBU, adult ITU – had failed validation – has this got an action plan in place

8. Endoscopy suites deviation from standards - ? followed up with action plan

9. 4B – we are aware of grave concerns expressed by John Hood due to significant levels of fungi in air sampling – has this been followed up and what is the system in place to alert Microbiology team when these are out of spec. ? is there a finalised air sampling SOP (Teresas was scrapped and HPS asked to write a new one, and they promptly asked Teresa for her advice . we can talk more about this , but I would recommend re instating Teresa's evidence based policy)

   Upgrade with ante room to ward was considered – is this being followed up?

10. Duty of Candour policy (as noted)

11. Cardiac Heater Coolers – is air sampling in place and results followed up?

12. Theatres QEUH – door shutting replacements and final validation

13. Cleaning SOPS – there was due to be a methodology review – was this completed and recommendations actioned

14. Surveillance – SPC charts do not pick up problems in real time with environmental and non endemic organisms . Trigger points or time from last isolate are more useful in this regard. What are the triggers in place for critical areas can these be shared with Micro

15. Chilled beams – is there evidence that cleaning rates and alterations to dew points have ensured no further leaks , how are condensation and leak events being reported to IPCT ?

That's all I can think of just now and we can forward documents that we have previously written which may help with the detail for your background.

I can't help but note a lot of the actions now taken forward in the circulated action log were initiated by us , and while it is good to see follow through , it is a little hard to see that our ability to assess the implementation is

severely limited by our current position. Of particular concern I am not convined that the ICNs would have the expertise to assess all the isolation rooms – having not long ago assisted in room assessments with ICNS.

Thanks for being willing to look at these issues.

Christine

Dr Christine Peters
Consultant Microbiologist
Clincial Lead Department of Microbiology QEUH

[redacted]

Julie Rothney

From:	Peters, Christine
Sent:	19 May 2020 17:58
To:	'WALLACE, Angela (NHS FORTH VALLEY)'; 'Jenny Copeland'; Inkster, Teresa (NHSmail)
Subject:	documents for background
Attachments:	SBAR 6A incident data.doc; SBAR PICU Gram Negative Infections 2020.doc; SBAR PICU Gram Negative Infections 2020PDF.pdf; SBAR PICU Ventialtion Vaidation.docx; Infection Control SBAR6.12.17 final.doc

Hi Angela, some light reading :)
Christine

Dr Christine Peters
Consultant Microbiologist
Clincial Lead Department of Microbiology QEUH

[redacted]

Isolation Rooms Schiehallion Ward - Level 2 Childrens

Completed 6th & 7th June 2015

HEPA Filter Integrity Test Report

AHU Ref.:	Room Ref.:	Fan Set Point Hz	Lobby to Corridor Pressure Set Pa	Upstream Aerosol Concentration Pre Scan	Maximum Ratio % Penetration	Recorded Downstream Concentration Ratio %	% Upstream Aerosol Concentration Post Scan	Pass/Fail
41AHU19	SCH-009	60	10	20 mg/m³	≤0.01%	0.0012%	114%	Pass
41AHU23	SCH-013	65	10	25 mg/m³	≤0.01%	0.0009%	101%	Pass
41AHU28	SCH-018	63	10	31 mg/m³	≤0.01%	0.0004%	95%	Pass
41AHU29	SCH-019	65	10	24 mg/m³	≤0.01%	0.0005%	107%	Pass
41AHU32	SCH-068	60	10	29 mg/m³	≤0.01%	0.0012%	109%	Pass
41AHU31	SCH-071	57	11	35 mg/m³	≤0.01%	0.0006%	97%	Pass
41AHU30	SCH-075	70	11	28 mg/m³	≤0.01%	0.0002%	112%	Pass
41AHU33	SCH-064	73	11	37 mg/m³	≤0.01%	0.0014%	103%	Pass

AHU Ref.:	Room Ref.:	Fan Set Point Hz	Lobby to Corridor Pressure Set Pa	HEPA Filter Serial Number	HEPA Filter Size	HEPA Filter Type	Final Balometer Volume l/s	Pass/Fail
41AHU19	SCH-009	60	10	030191-14152	610x610x110 DAS Gasket	H14	224	Pass
41AHU23	SCH-013	65	10	030192-14152	610x610x110 DAS Gasket	H14	252	Pass
41AHU28	SCH-018	63	10	41133-000297	610x610x110 DAS Gasket	H14	238	Pass
41AHU29	SCH-019	65	10	41133-000298	610x610x110 DAS Gasket	H14	244	Pass
41AHU32	SCH-068	60	10	030194-14152	610x610x110 DAS Gasket	H14	220	Pass
41AHU31	SCH-071	57	11	030189-14152	610x610x110 DAS Gasket	H14	234	Pass
41AHU30	SCH-075	70	11	030193-14152	610x610x110 DAS Gasket	H14	260	Pass
41AHU33	SCH-064	73	11	030190-14152	610x610x110 DAS Gasket	H14	221	Pass

Summary:

Level 2 Childrens' Schiehallion Ward Isolation rooms.

The following works were carried out to achieve and confirm compliance with HTM03:01 & BSEN ISO14644-3

1. HEPA Filter integrity test. All tests passed BSEN ISO 14644-3
2. AHUs - Air volumes set and recorded. (set to achieve the required differential pressure from lobby to corridor)
3. Room Differential pressures. All tests passed and are compliant with HTM03:01

All of the above tests were witnessed by Brookfield Multiplex representative Julie Miller M&E Manager.

3

SUPERVISOR'S NOTIFICATION OF DEFECT (CI 42.2)	**Stage 3 A&C**			CAPITA
Short Description	Air Permeability Tests.			Date 2nd September 2015
Defect will prevent the Employer making use of the work	Yes	✓		Instruction No. 139
	No			

To: Contractor: Brookfield Multiplex Construction Europe

Project Office Address:

Project Office, Hardgate Road, Govan, Glasgow
Scotland United Kingdom G51 4SX

1. Dear Sir

Isolation Rooms

Following the discovery that Air Permeability Tests were not carried out within 36 isolation rooms in accordance with the Employer's Requirements NHS Guidance Documentations, document HBN 04-01. We recognise that you are in the process of carrying out test to these rooms and any necessary work to ensure that they comply. Please provide the test results for all room and confirm when the works are complete.

Notification		
Signed	Supervisor	Date: 2nd September 2015

Distribution: Peter Moir, Alasdair Fernie, David Hall.

Response;

As you have indicated you have recognized we are in the process of carrying out test to these rooms and any necessary work to ensure that they comply. We have provided the test results and confirm works are ongoing to complete.

Test results and data issued on Friday 4th September;-

- Schedule of Isolation rooms data.
- Drawings highlighting individual rooms, noted accordingly with actions and test data.
- Air Permeability Testing from RSK.
- Isolation Room Schiehallion Ward L2- Hepa filter integrity Test report of 6th +7th June ’15.
- Copy of RDS’s for Schiehallion ward

From: Gillon Armstrong [Gillon.Armstrong[redacted] on behalf of Gillon Armstrong
Sent: 28 August 2015 07:35
To: Moir, Peter
Cc: David Wilson; Loudon, David; Alasdair Fernie
Subject: FW: NSGH Isolation Room Test
Attachments: 524394 South Glasgow Hospital Ward 2A (SCH) Isolation Room Test Results (00) 27.08.pdf

Peter,

Please see attached the report from RSK detailing the air permeability results for rooms 18 and 19 in the Schiehallion Ward.

Regards

Gillon Armstrong
Section Manager - Construction

Brookfield MULTIPLEX BM

Brookfield Multiplex Europe
Site Office
Institute of Neurological Science
Queen Elizabeth University Hospital
1345 Govan Road
Glasgow, G51 4TF, United Kingdom
[redacted]
Email Gillon.Armstrong[redacted]
Web www.brookfieldmultiplex.com

Please consider the environment before printing this email.

From: SBorland@[redacted] [mailto:SBorland[redacted]
Sent: 27 August 2015 15:16
To: Gillon Armstrong; Jerry Sullivan
Subject: NSGH Isolation Room Test

Gents,

Please find attached a letter report confirming the test results for the 2 rooms in the Schiehallion Ward.

Regards

Stuart

Stuart B Borland
Director

RSK
Building Sciences Division
Abbey Park, Humber Road, Coventry, CV3 4AQ, UK

[redacted]

http://www.rsk.co.uk

RSK Environment Ltd is registered in Scotland at 34 Albyn Place, Aberdeen, Aberdeenshire, AB10 1FW, UK
Registered number: 115530

This message contains confidential information and is intended only for the individual named. If you are not the named addressee, you should not disseminate, distribute or copy this e-mail. Please notify the sender immediately by e-mail if you have received this e-mail by mistake and delete this e-mail from your system. E-mail transmission cannot be guaranteed to be secure or error-free as information could be intercepted, corrupted, lost, destroyed, arrive late or incomplete, or contain viruses. The sender therefore does not accept liability for any errors or omissions in the contents of this message, which arise as a result of e-mail transmission. If verification is required, please request a hard-copy version.

Before printing think about your responsibility and commitment to the **ENVIRONMENT!**

Message protected by MailControl: e-mail anti-virus, anti-spam and content filtering.
http://www.mailcontrol.com

From: David Wilson [David.Wilson2[redacted] on behalf of David Wilson
Sent: 20 August 2015 10:40
To: Loudon, David (David.Loudon[redacted] [David.Loudon[redacted] Powrie, Ian (Ian.Powrie[redacted] [Ian.Powrie[redacted]
Cc: Alasdair Fernie [Alasdair.Fernie[redacted] Gillon Armstrong [Gillon.Armstrong[redacted]
Subject: NSGH A&C - Current Issues

David / Ian,

I thought it would be worthwhile noting down some of the current issues and a where we sit with them:

AGV Operation.
We are currently in communication with Swisslog and Schindler and arranging for their specialist engineers to be on site next week to resolve the ongoing communication fault. I have been trying to get them here this week but due to the limited number of persons with the IT Software skills required and holidays this has proved difficult. Swisslog have been remotely accessing the servers and with their on-site engineer resolving issues as they arise.

I have also been in discussion with them about improvements to their service when resolving defects particularly on working together to resolve rather than blame each other!. Both companies have told me that they are putting additional staff through the specialist software training required to be able to fault find and rectify issues.

I have also asked Swisslog to provide support this weekend in case of any issues. I will get back to you when I have further information on this.

Schindler ID
We are still chasing the completion of the lift access control (Schindler ID) and the current delay appears to be the completion of the software. We have taken this to director level within in Schindler tom put pressure on the software team in Switzerland.

Fire Alarms
Scotshield have been working with gent (fire alarm panel manufacturer) on the false alarm issues on Level 1 Stroke Ward. To date they have changed the devices (detectors etc.) on the loop causing the problem, changed loop cards and now installed a new panel. None of these have rectified the problem. They have now put a data logging diagnostic tool on to the system to try and capture as much data as possible to get to the cause of the problem. At the moment the are looking at the possibility of electro magnetic interference which they are currently investigation.

As well as the full time on site engineer and the gent engineer, Scotshields Project manager and their Service Director have been on site and pushing to get this issue resolved.

On the theatre repeater panel discussions, we have looked at the design and during the process it was agreed that there was no requirement for Fire alarm repeaters within the theatres, however there are two Nurse Call touch screen panels within the theatre corridor which when looking at notes from commissioning looked like they may display the fire message. To clarify this we intend to carry out a fire alarm test and check the panels. We will arrange this through estates but will leave this until the issues with the stroke ward panel are resolved.

Isolation Room Air Permeability Testing
Gillon and his team have been working through the isolation room testing but this is proving slow due to access restrictions. There are also some issues that are arising particularly in relation to rooms with pendants which are not achieving the leakage rate of less than 1l/s per m3 of envelope volume. We will need to further discuss with your clinical / microbiological team on this.

We have also previously highlighted (both verbally and when emailing test results) that although the test results from the permeability tests have achieved the leakage rate criteria some have not met the 5% difference between the positive and negative results. During a meeting with Craig Williams (with myself, Ian, Peter Moir, Mary Anne Kane present) we discussed this and my understanding was this had been accepted, however I believe this has now altered (after microbiological testing in Schiehallion). It may be useful to meet up with Craig again to discuss this particularly going forward for the rest of the testing.

We assisted yesterday with some adjustments to the ventilation rates within Schiehallion, and happy to assist in this manor, but would highlight that the systems have been commissioned to design values (in accordance with the SHBN) and any changes made need to be fully considered.

Let me know of a date to that we can meet up with Craig etc. to discuss the testing criteria.

I know this is a bit of a long winded email but thought it worthwhile putting the status with the current issues in one mail.

Regards
David

David Wilson
Commissioning Manager - Construction

Brookfield Multiplex Construction Europe Ltd
Fairfield - Suite 12
1048 Govan Road
Glasgow, G51 4XS, United Kingdom
[redacted]
E david.wilson2[redacted]
W www.brookfieldmultiplex.com

Please consider the environment before printing this email.

Please note we have now moved office!

From: Loudon, David [David.Loudon@[redacted] on behalf of Loudon, David
Sent: 01 September 2015 17:09
To: Alasdair Fernie
Cc: Armstrong, Jennifer; Archibald, Grant; Williams, Craig
Subject: Schiehallion Ward - Royal Hospital for Children

Alasdair

At a meeting today, the Board has taken a decision to request that the environmental standards noted at the Leeds Children?s Hospital be considered for the Schiehallion Ward in the Royal Hospital for Children.

You will appreciate the urgency behind his request and therefore, I would appreciate if you will expedite answers to the following questions:

1. Can the current air handling systems be adapted to achieve the environmental standards being achieved at Leeds? I have cut & pasted Ian Powrie?s e mail dated 28th August. You will note that the design is to HBN 04-01 supplement 1 and associated tables. I understand that contrary to the Leeds set up, a transfer / balance grill may be required on the bedroom door to the lobby.
2. I understand that BM has previously visited the rooms with an H&V consultant who has advised that the environmental standards should be deliverable in the Schiehallion Wards. Can you advise by return
3. Assuming that the environmental standards can be achieved within the Schiehallion suite, can you provide an indication of timescale. Owning to the urgency, the Board would expect 24/7 levels of activity.

We have also been advised that the air handling system has proven to be unreliable over the past few days and this has impacted on the Board?s ability to complete our infection control tests. We seek your assurances regarding the reliability of the system.

Please contact me should you wish to discuss any part of my message and I look forward to receiving your responses to the questions above as a matter of priority.

Regards

David

David W. Loudon, MCIOB, CBIFM, MBA
Director of Facilities and Capital Planning
NHS Greater Glasgow & Clyde
Management Building
Govan Road
Glasgow
G51 4SX

[redacted]

****

NHSGG&C Disclaimer
The information contained within this e-mail and in any attachment is

confidential and may be privileged. If you are not the intended recipient, please destroy this message, delete any copies held on your systems and notify the sender immediately; you should not retain, copy or use this e-mail for any purpose, nor disclose all or any part of its content to any other person.
All messages passing through this gateway are checked for viruses, but we strongly recommend that you check for viruses using your own virus scanner as NHS Greater Glasgow & Clyde will not take responsibility for any damage caused as a result of virus infection.
****

Message protected by MailControl: e-mail anti-virus, anti-spam and content filtering.
http://www.mailcontrol.com

From: Ian McKenzie [imck[redacted] on behalf of Ian McKenzie
Sent: 03 September 2015 08:02
To: Julie Miller
Subject: Fwd: Schiehallion Ward

Just a reminder of our discussion - not that you'll need it..

Initial reaction is day one design intent - without installed HEPA filters.

Then design revision with HEPA filters installed still as an isolation room.

New intent for rooms didn't even come through a form of 'change control' as far as I'm aware it just appeared to migrate into BMT this is what the board wants, they can have it at a cost..

Was there ever a requirement for the magnehelic gauges to send a signal anywhere? On the original contract - not telling you how to suck eggs here just a helping reminder of how to progress. Start from initial design intent and official revision changes to the isolation rooms.

Hope this helps!

Ian.
Best Regards
Ian McKenzie
H&V Commissioning Services Ltd
[redacted]

Sent from my iPhone

Begin forwarded message:
From: Julie Miller <Julie.Miller[redacted]
Date: 3 September 2015 07:24:45 BST
To: Ian McKenzie [redacted]
Subject: Fw: Fwd: Schiehallion Ward
Have left voicemail.
Below is very confidential
Bad response to smoke test.
Now we have to justify design again
I was misquoted etc etc
Was still emailing at midnight because of this and boilers - did send text last night when you would have been tucked up in bed

From: Alasdair Fernie
Sent: Wednesday, September 02, 2015 06:41 PM GMT Standard Time
To: Gillon Armstrong; Julie Miller; Grant Wallace; Emma White
<emma.white[redacted]
Subject: Fwd: Schiehallion Ward

I could have done with a heads up on this. (See below)

I'm not sure we are down to provide a smoke sealed room.

Grant. This is getting to the stage where the guys are filling in holes and a smoke test is not part of our testing as far as I am aware.

We could be getting drawn into something we contractually don't have to provide.

Emma

As my design specialist (and advice giver). What am I down to have done regarding air leakage. S it absolutely zero?? Have the board paid for this.
Regards

Alasdair Fernie BSc (Hons) MRICS FCIOB
Project Director

Brookfield Multiplex Europe
M [redacted]
Wwww.brookfieldmultiplex.com

Begin forwarded message:
From: "Loudon, David" <David.Loudon[redacted]
Date: 2 September 2015 18:02:44 BST
To: Alasdair Fernie <Alasdair.Fernie[redacted]
Subject: Fwd: Schiehallion Ward
Alasdair

This result will not be well received by my medical colleagues and I expect that the rooms will not be opening on the 4th as planned. This is major problem . We need to get this sorted for once and all.

David

David W Loudon MCIOB CBIFM MBA
Director of Facilities and Capital Planning
NSH Greater Glasgow & Clyde

Begin forwarded message:
From: "Hunter, William"
<William.Hunter[redacted]
Date: 2 September 2015 17:53:17 BST
To: "Hunter, William"
<William.Hunter[redacted], "Loudon, David"
<David.Loudon[redacted], "Brattey, David"
<David.Brattey[redacted]
Subject: RE: Schiehallion Ward
David L,

I have just caught up with David B who has provided the following summary:

1. Smoke test has shown air ingress (within one room) via IPS & air ingress in both rooms via the IT socket. Julie Miller and Gillon Armstrong were both present and remedial action has been agreed. IPS appears straight forward. The IT socket requires a sealed ceiling hatch to be opened and above conduit housing various services to be inspected to determine the cause of air ingress. If conduit within ceiling void is open, it was agreed that this needs to be sealed to stop air ingress via IT sockets.
2. Julie Miller noted actions & will share tomorrow.
3. Julie Miller will action critical alarm monitoring of these rooms together with David B (agreed this pm) as part of BMS.

I think Julie Millers com will be more detailed...these are the headlines pending Julie's com.

Billy
From: Hunter, William
Sent: 02 September 2015 17:31
To: Loudon, David; Brattey, David
Subject: RE: Schiehallion Ward

David B,

Can you pls confirm how the smoke tests went this afternoon within the children's hospital, ward 2A, rooms 18 & 19.

We can pick up on room pressure monitoring via BMS tomorrow.

Regards

Billy

From: Hunter, William
Sent: 02 September 2015 15:30
To: Loudon, David
Cc: Brattey, David; Matheson, Fiona
Subject: RE: Schiehallion Ward

David,

I have just received confirmation that the smoke test will be undertaken at 4:00pm today. John Hood, Craig

Williams, David Brattey and Julie Miller will all be in attendance.

Air pressure in rooms will be by Estates colleagues 4 times per day (09:00/15:00/21:00/03:00).

These rooms are linked to BMS however they are silent and do not activate. David Brattey will pick this up and arrange for the alarms to be activated (either by noise or alert on screen) within the Helpdesk. Further clarity is required in connection with pressure (measured in pascals) tolerance levels. David will prioritise this.

Billy

From: Loudon, David
Sent: 02 September 2015 08:25
To: Hunter, William
Subject: RE: Schiehallion Ward

Billy

I understand that another smoke test will be conducted by the ICT. Can you contact Craig as I would like BM and David Bratty to be in attendance.

David

David W. Loudon, MCIOB, CBIFM, MBA
Director of Facilities and Capital Planning
NHS Greater Glasgow & Clyde
Management Building
Govan Road
Glasgow
G51 4SX

From: Hunter, William
Sent: 02 September 2015 07:57
To: Loudon, David
Cc: Matheson, Fiona
Subject: RE: Schiehallion Ward

David, these rooms will be cleaned this morning and com issued to Craig once task is complete.

Regards

BIlly

From: Loudon, David

Sent: 01 September 2015 16:49
To: Williams, Craig
Cc: Alasdair Fernie; David Wilson; Hunter, William
Subject: Schiehallion Ward
Importance: High

Craig

I have been advised by BM that the gauges are currently sitting at 10pa in all of the rooms.

By copy of this message, I will also ask them to monitor the BMS and confirm if an audible alarm is fitted for pressure drops.

Per our discussion, I will instruct FM team to re-clean the rooms without delay and advise you when complete to enable further sampling.

Regards

David

David W. Loudon, MCIOB, CBIFM, MBA
Director of Facilities and Capital Planning
NHS Greater Glasgow & Clyde
Management Building
Govan Road
Glasgow
G51 4SX

[redacted]

****
****
NHSGG&C Disclaimer
The information contained within this e-mail and in any attachment is
confidential and may be privileged. If you are not the intended recipient, please destroy this message, delete any copies held on your
systems and notify the sender immediately; you should not retain, copy
or use this e-mail for any purpose, nor disclose all or any part of its
content to any other person.
All messages passing through this gateway are checked for viruses, but
we strongly recommend that you check for viruses using your own virus
scanner as NHS Greater Glasgow & Clyde will not take

responsibility for
any damage caused as a result of virus infection.
****
****

Message protected by MailControl: e-mail anti-virus, anti-
spam and content filtering.
http://www.mailcontrol.com

Please consider the environment before printing this e-mail.

This email and any attachments are confidential and may be legally
privileged (in which case neither is waived or lost by mistaken delivery). The
contents of this email, including any attachments, are intended solely for the
use of the individual or entity to whom they are addressed. Any unauthorised
use is expressly prohibited. We do not waive any privilege, confidentiality or
copyright associated with it. Brookfield collects personal information to
provide and market our services (see our privacy policy at
http://www.au.brookfield.com for more information about use, disclosure
and access). Brookfield's liability in connection with transmitting,
unauthorised access to, or viruses in this message and its attachments, is
limited to re-supplying this message and its attachments
Message protected by MailControl: e-mail anti-virus, anti-spam and content filtering.
http://www.mailcontrol.com

H&V Commissioning Services Limited
Office Tel [redacted]
Office Fax [redacted]

Web http://www.handv.co.uk
The contents of this email are confidential to the intended recipient at the email address to which it has been addressed. It may not be
disclosed to or used by anyone other than this addressee, nor may it be copied in any way. Any retransmission, dissemination, copying or
use of this communication without prior permission of the addressee is strictly prohibited. Please note that any views or opinions presented in
this email are solely those of the author and do not necessarily represent those of H&V Commissioning Services Limited. If received in error,
please contact H&V Commissioning Services Limited by Email at tom[redacted] or by telephone on [redacted] quoting the
name of the sender and the addressee, and then delete it from your system.
Please note that H&V Commissioning Services Limited have scanned this email for viruses however the recipient should ensure the email is
virus free prior to opening. The sender does not accept any responsibility for viruses and the recipient should check this email and any
attachments for their presence.

NHS Greater Glasgow & Clyde

Queen Elizabeth University Hospital

And

The Royal Hospital for Children

Report on Design, Construction and Commissioning Process for

- Adult Hospital – Ward 4B (BMT)
- Adult Hospital – Preparation Rooms within Theatres Suite
- Royal Hospital for Children – Schiehallion Ward Ventilation

DRAFT

D W Loudon
Project Director
25th February 2016

List of Contents

Section 1.0 – Introduction and Recommendations

Section 1.2.0 – Policy for Design Development and Specification Sign Off

Section 1.3.0 – Design and Specification for

Section 1.4.0 – Next Steps and Recommendations

Section 2.0 – Adults Hospital, Ward 4B Haemato-Oncology Process 2010 to June 2015

Section 3.0 – Adults Hospital, Ward 4B Haemato-Oncology Process June 2015 to January 2016

Section 4.0 – Shared Preparation Rooms in Adults Hospital Theatre Suite

Appendices

Appendix 1: Commissioning Data for Adults and Children's Theatres
Appendix 2: HPS Recommendations report dated December 2015
Appendix 3: Technical Advisors e mail dated 4th June 2015 notifying the Board of BM e mail dated 4th June 2015 confirming compliance with SHPN 04- supplement 1
Appendix 3A: Sector Estates Manager's report dated 22nd February 2016, advising that in his opinion, BM assurances are flawed.

DRAFT

1.0 Introduction

The purpose of this report and related appendices is to record the design and approval process for the provision of the following areas within the adult hospital and children's hospital;

- Adult Hospital – variation of scope of works to include heamato-oncology services in ward 4B. It should be noted that the original design of the ward excluded requirements for bone marrow transplant (BMT).
- Adult Hospital – the provision of preparation rooms within the operating theatres
- Children's Hospital – Schiehallion Ward – extract ventilation

The report includes the process for the commissioning of the above areas and also copies of the commissioning data provided by the main contractor, Brookfield Multiplex. It should be noted that under the form of contract used for the development, NEC3 – Option C, that it is the main contractor's responsibility to ensure that the buildings and the related services are fully commissioned and compliant with the specifications and guidelines included in the contract documents, known as the Employers Requirements.

The report considers the design, development and final process over 2 periods of time. They are;

- 2010 – June 2015
- June 2015 – February 2016

DRAFT

1.0.0 Policy for Design Development and Specification Sign Off

From the outset of the project, the Board had established robust processes for stakeholder engagement for design consultation and sign off.

User groups were established at an early stage and it was their role to develop and sign off the clinical services specification with support from members of the project team. The user groups were also required to sign off floor plans.

An overriding principle for the design and specifications was that compliance with the current version at that time of the Scottish Health Technical Memorandum (SHTM) and subsets of this guidance was mandatory.

The sigh off process included a review of the 1:200 plans initially and subsequently, the final approval of layouts for construction via approved 1:50 plans.

The plans required formal sign off by the user groups prior to being issued to Brookfield Multiplex to progress.

DRAFT

1.1.0 Adult Hospital – Ward 4B

1.1.1 Provision of Haemato-oncology Ward

Section 2 provides a timeline for the provision of haemato-oncology ward from 2007 to 2013.

It also includes details of the sign off process including the user groups and individuals involved.

A copy of the Clinical Output Specification which was used to inform the design of the ward is also included in this section.

It should be noted that the design sign off did not include a requirement for BMT operations.

In June 2013, the project team received a request from Regional Services to increase the haemato-oncology ward from 10 to 24 beds. It should be noted that the specification requested was the same as the other 10 rooms previously incorporated into the design of the hospital.

On receipt of Regional Services sign off of the 1:200 plans and specifications in July 2013, a Compensation Event was issued to the main contractor to proceed with the construction work. The construction works were incorporated into the master programme and formed part of the handover process and related programme for the 26th January 2015 completion date.

The commissioning test data for haemato-oncology work is included at Appendix 1.

Following handover of the project on 26th January 2016, the Project Team focused on the equipping and migration management phases of the project.

After occupancy of Ward 4 B, the Project Team and Main Contractor were made aware of concerns regarding the containment of the rooms, ventilation and sealant standards. The concern was expressed as result of bacteriology tests undertaken by the infection control team and the results not meeting their requirements.

As a result of discussions between infection control, estates, the project team and senior managers, it was decided that the patients in Ward 4B should be returned to the Beatson until a way forward was agreed.

On 17th July 2015, a Project Management Instruction was issued to Brookfield Multiplex to undertake further design works and provide a price, and programme. The PMI is included in Section 4 as is the Compensation Event issued on 17th September. It should be noted that the specification in the PMI was agreed in advance with infection control, estates staff, clinical staff and the project team. The works commenced on 27th July and completed on 29th October 2015. The works were delayed due to a late change to install digital pressure gauges to the single rooms in preference to analogue gauges.

Prior to handover of the works, the Deputy Project Director arranged a pre meeting to demonstrate the works and seek assurance that the standards were acceptable. The commissioning information (Refer to Section 4) confirmed that the clinical specification delivered by Brookfield Multiplex was compliant and therefore, the expectation was that the

infection control team would support the sign off of the rooms. The infection control team personnel changed before their final sign off took place and the new personnel declined to sign off the completed works from an infection control perspective.

The infection control personnel decided that they wished to consult Health Protection Scotland (HPS) regarding the specification and as a result a recommendation report was issued by HPS in consultation with Health Facilities Scotland (HFS) and other expert opinion. Refer to Appendix 2. It should be noted that neither the specification agreed for the additional works in Ward 4B nor the report prepared by HPS noted a requirement for Level 3 BMT operating environments.

Subsequent to receiving the HPS report, the Deputy Medical Director convened a meeting with members of the infection control team and it is understood that alternative specification was proposed for BMT environmental standard which is a departure from the recommendations contained in the HPS report.

At a meeting convened on 21st January 2016 by the Chief Executive, the Board Technical Advisor referenced a guidance note titled "*Facilities for the Treatment of Adults with Haematological Malignancies – 'Levels of Care' and published by BCSH Haemato-Oncology Task Force 2009. It was agreed at this meeting that infection control colleagues would review the document and* confirm if the content was considered to be the current recommendation for Level 3 BMT operations. At the time of preparing this report, an answer has not be received.

1.2.0 Children's Hospital – Schiehallion Ward – Isolation Rooms

On occupancy of the Schiehallion Ward, the Infection Control Team queried the specification and operational requirements relating to the extract ventilation of the Schiehallion Ward in the children's hospital.

On 4th June 2015 (refer to Appendix 3), the Boards Technical Advisor, Currie & Brown issued an email to the Board Sector Estates Manager, intimating that Brookfield Multiplex and their designers confirmed their understanding that the solution provided by Brookfield Multiplex is compliant with the relevant HBN Guidance Notes.

At a meeting held on 21st January 2016 by the Chief Executive, it was agreed that the Deputy Project Director and Sector Estates Manager would comment on the action point "establish if the proposed increase of extract in the en suite rooms in the Schiehallion Ward is a betterment over the original specification for the rooms".

The Sector Estates Manager responded to this query on 21st February 2016 (refer to Appendix 3A) and it is clear that in his opinion differs from the statement received from Brookfield Multiplex. It is his opinion that the current design arrangements do not meet the design intent of SHPN 04 and therefore, no betterment prevails over the original Employers Requirements.

Clear, it is a difference of opinion on the design and construction compliance of the isolation rooms and therefore, the liability and responsibility requires to be established.

1.3.0 Adult Hospital – Shared Preparation Room in the Theatre Suite

The summary page in Section 4 and related appendices provide an overview of the design and sign off process undertaken by the Project Team and professional advisors (internal and external) for the shared preparation rooms in the theatre complex. The commissioning data may be found in Section 2.

The construction and commissioning of theatres is compliant with the signed off drawings and specification approved by the Board.

DRAFT

1.4.0 Next Steps and Actions

1.4.1 Adult Hospital – Ward 4 (BMT)

At the time of writing this report, the definitive specification for Level 3 BMT operating and clinical environments should be confirmed by clinical staff and communicated to the Project Director for review and consideration. The requirement for the definitive specification is included in the action plan for BMT and theatre operations dated 21st January 2016. It should be noted that prior to the meeting convened by the Chief Executive on 21st January 2016, the design brief requirements delivered to the Project Team made no reference to Level 3 BMT operating standards.

On receipt of the design brief, the Project Team will engage with Brookfield Multiplex to ascertain if the brief is technically feasible, the design options are available, cost and programme.

1.4.2 Children's Hospital – Schiehallion Ward Extract Ventilation

It is apparent that a difference of professional opinion prevails between Brookfield Multiplex designer, The Board's Technical Advisor and the Boards Sector Estates Manager regarding compliance with guidance note SHPN 04 – supplement 1.

The Project Director will notify Brookfield Multiplex of the difference of opinion and seek their response and intentions. The Board's Technical Advisor will also be invited to respond.

In the interim, the Project Director has instructed the Sector Estates Manager to review the environmental conditions within the isolation rooms to ascertain if the existing infrastructure can accommodate local changes to comply with SPHN 04- supplement 1.

1.4.3 Adult Hospital – Shared Preparation Rooms in Theatre Suite

The steps taken to sign of the design and specification are included within the report and as the construction is compliant with the brief provided by the Board. Therefore, it is recommended that no further action is required.

1.4.4 Short Life Working Group

It is recommended that a short life working group be established with an objective to publishing an agreed protocol that describes the approval processes between Infection Control Team and Capital Planning for the delivery and commissioning of capital projects.

DRAFT

Currie & Brown

Currie & Brown UK Ltd
Building 3, 2 Parklands Avenue,
Maxim Office Park, Eurocentral,
Lanarkshire, ML1 4WQ, United Kingdom

Tel: +44 (0)845 287 8500
Fax: +44 (0)1698 831 270
www.curriebrown.com

David Loudon
Director of Facilities and Capital Planning
NHS Greater Glasgow & Clyde
Corporate Headquarters
JB Russell House
Gartnavel Royal Hospital
1055 Great Western Road
Glasgow G12 0XH

15th March 2015

Dear David

Royal Hospital for Children - Schiehallion Ward - Isolation Rooms

Further to your letter dated 1st March 2016 we have reviewed the content and enclosures and would comment as follows:

The baseline document (NEC3 Works Information) for determining compliance is SHPN01 – supplement 1 and responsibility for compliance rests with Brookfield Multiplex. Approval that works have been completed in accordance with the works information rests with the NEC 3 Supervisor.

Brookfield Multiplex have stated, via TUV SUD Ltd, that they have complied with the requirement of Table 1 - Isolation Site Parameters included in SHPN01. The statement in the Board briefing note 'Action Plan for BMT and Theatre Operations at 21 January 2016' includes an opinion that the guidance in Table 1 refers to rooms being modified and not new build situations. There is nothing in SHPN01 that states this and as such Table 1 is the Boards requirements (works information).

Should it be proven that the requirements of SHPN01 – Supplement Table 1 have not been complied with and the rooms are not performing to the necessary performance criteria, then Brookfield Multiplex should address remedial action.

If additional performance criteria are now been requested, then the compensation event process would apply.

[redacted]

Douglas J Ross
MRICS
Director

Regulated by the RICS
Currie & Brown UK Ltd, Registered in England & Wales, No 1300409
Registered Office: Dashwood House, 69 Old Broad Street, London, EC2M 1QS

Queen Elizabeth and Royal Hospital for Children

Action Plan for BMT and Theatre Operations at 21 January 2016

Response to question 9 of the action plan:

Question: *Establish if the proposed increase of extract in the en-suite rooms in the Schiehallion ward is betterment over the original specification for the rooms.*

Response: *The points of concern raised by Infection Control Doctors (ICD) over the isolation facilities provided for Neutropenic patients supported in the Royal Children's Hospital(RCH), ward 2b (schiehallion), are:*

The isolation rooms are designed and constructed to meet the requirements of:

Scottish Health Planning Note 04 (SHPN 04) In-patient Accommodation: Options for Choice Supplement 1: Isolation Facilities in Acute Settings.

The purpose of this guidance is to provide guidance on the facilities required for isolating patients on **acute general wards** *and explains*

"How an enhanced single room with en-suite facilities and a ventilated lobby can provide an isolation suite for patients who have airborne infections or who need to be protected from them;"

However this guidance states under Exclusions, Para 1.10 (page 4):

"This Supplement does not describe the specialist facilities required in infectious disease units or on wards where severely immune-compromised patients are nursed. Guidance for these facilities will follow in a further Supplement to SHPN 04."

The guidance advises that Enhanced single room with en-suite facilities and ventilated lobby (isolation suite)

Para 2.9 An enhanced single room with a positive pressure ventilated bed access lobby an en-suite facilities **with extract ventilation** *provides both source and protective isolation.*

Para 2.10 The positive pressure lobby ensures that air from the corridor does not enter the isolation room, and that air from the room does not escape into the corridor. This simple design enables the suite to be used for both **source** *and* **protective** *isolation without the need for switchable ventilation or special training for staff. It also provides safe isolation for patients whose exact condition is unknown.*

Example Room Layout: New build single room with en-suite facilities and bed-access lobby (isolation suite)

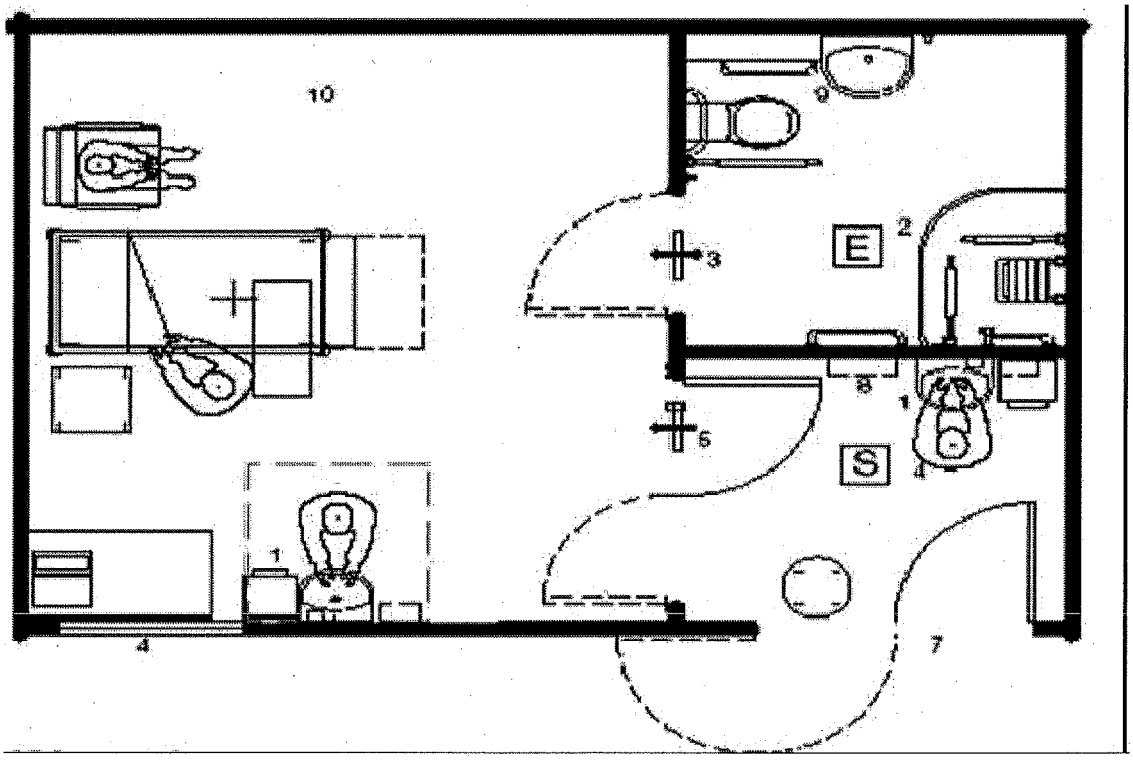

It should be noted that the recommended ventilation layout illustrates the supply air grill in the pressurised access lobby, full extract within the en-suite facility and transfer grilles on or above the doors from the isolated room to the positive pressure access lobby and to the en-suite, there is no extract from the isolation room itself which should always be held at positive pressure..

This is supported by the Minimum requirements detailed in the general specification for ventilation within a single room with en-suite facilities and bed-access lobby (isolation suite) detailed in Para 3.7. Namely:

In the bed access lobby:

- *A suitable air supply;*

In the isolation room;

- *A pressure stabiliser above bedroom door. (To pressurised lobby)*

In the en-suite bathroom:

- *Suitable extract system to the en-suite bathroom;*
- *transfer grille in the en-suite door;*

I raised the question of design compliance via David Hall in June 2015, where a response was provided by Mark Harris (Associate Engineer) of Wallace Whittle (copy attached), stating that

"We understand that the solution we have provided is compliant."

I believe that this statement is based on the excerpt from Table 1 highlighted below

Room	Parameter	Nominal Design Values
Lobby	Room volumes Bed access lobby (5m2 x 2·7m) Personnel access lobby (4m2 x 2·7m)	 13·5 m^3 10·8 m^3
	Pressure differential to corridor	Nominally 10 Pascals
	Supply air flow (for a room of this size)	Bed access lobby - 238 l/s Personnel access lobby - 208 l/s
	Air change rate	Bed access lobby – 63 per hour Personnel access lobby – 69 per hour
Isolation Room	Room volume (19m2 x 2.7m)	51.3m^3
	Pressure differential to corridor	Nominally zero
	Room air flow (for a room of this size)	158 l/s
	Air changes rate	10 per hour
En-suite	Room volume (6m2 x 2·7m)	16·2m^3
	Pressure differential to isolation room	Negative
	Extract air flow (for a room of this size)	158 l/s (If extract is fitted in the isolation room this reduces to 45 l/s in the en-suite with 113 l/s extract in the isolation room)
	Air change rate	At least 10 per hour

Table 1: Isolation Suite – Ventilation Parameters

Where immuno-compromised patients are to be accommodated, such as in transplant units or specialist cancer units, there could be a need for positive pressure isolation rooms.

In my view this statement is intended for situations where the room is being modified to meet these requirements not a new build situation.

My position is supported by both Para 4.3 which states:

"The ventilation system is designed on the basis that all its constituent parts, as described in Table 1, work together to form an integrated system. For example, air to the suite is supplied at high level in the lobby, with extract in the en-suite bathroom. This ensures good airflow through the entire isolation suite. Similarly, the volumetric airflow rate in the lobby is determined by the number of air changes required in the patient's bedroom. Modifying or failing to provide one element of the system will jeopardise the performance of the system as a whole."

As well as the statement following directly behind table 1 in the guidance:

"Where immuno-compromised patients are to be accommodated, such as in transplant units or specialist cancer units, there could be a need for positive pressure isolation rooms."

In addition empirical data collected between estates and the site ICD: currently indicates that when the en-suite door is left opened to the isolation room under the above ventilation arrangements, then the high extract rate in the isolation room results in the isolation room becoming negative compared to the en-suite room increasing the risk of contaminant ingress from the en-suite, particularly as the WC's are designed without the toilet seat lids to contain the resultant plume when flushing.

Conclusion:

Reviewing the evidence in this report it is quite clear regardless of the disclaimer in Para 1.10, that the current design arrangements do not meet the design intent OF SHPN 04 supplement 1 and therefore the proposed modification to bring these rooms in line with this guidance is not betterment over the original ER's which state that Brookfield have requirement to design all facilities in line with the appropriate guidance (Check statement provided to MAK in previous email.

Ian Powrie

Sector Estates Manager (South)

21st February 2016

Hirst, Allyson

From: Loudon, David
Sent: 02 February 2016 18:14
To: Hirst, Allyson
Subject: FW: Childrens L2 Isolation Rooms
Attachments: SHPN 4 Supplement 1.pdf

From: David Hall [mailto:David.Hall[redacted]
Sent: 28 January 2016 21:25
To: Moir, Peter
Cc: Loudon, David
Subject: Fw: Childrens L2 Isolation Rooms

Peter,

Trail received previously on the isolation room design. Refer to clause highlighted yellow, which reflects the design.

David

David Hall
FCIOB/MAPM
Director
Currie & Brown
Email: david.hall[redacted]
Building 3, 2 Parklands Avenue, Maxim Office Park, Eurocentral
Lanarkshire ML1 4WQ
United Kingdom
[redacted]
Website: www.curriebrown.com

Currie & Brown UK Limited
Registered in England and Wales
Registered Number 1300409
Registered Office: Dashwood House, 69 Old Broad Street, London, EC2M 1QS

From: David Wilson <David.Wilson2[redacted]
Sent: 10 June 2015 12:48
To: David Hall; Powrie, Ian (Ian.Powrie[redacted]
Subject: FW: Childrens L2 Isolation Rooms

David / Ian

I'm not sure if a I previously sent this response from Wallace Whittle on the design of the childrens isolation rooms and compliance with regulations. As noted below we believe the design is compliant.

Regards
David

David Wilson
Commissioning Manager - Construction

Brookfield Multiplex Europe
New South Glasgow Hospitals Project
Hardgate Road
Glasgow, G51 4SX, United Kingdom
[redacted]
E david.wilson2[redacted]
W www.brookfieldmultiplex.com

From: Harris, Mark [mailto:Mark.Harris[redacted]
Sent: Thursday, June 04, 2015 5:29 PM
To: David Wilson
Cc: Julie Miller; London Filing
Subject: RE: Childrens L2 Isolation Rooms

David,

Guidance is given in the HBN on the volumes required if extract is also provided from within the isolation room (see attached). As such, we understand that the solution we have provided is compliant.

Regards

Mark Harris
Associate Engineer
BEng (Hons) MCIBSE

TUV SUD Limited
18 Buckingham Gate
London
SW1E 6LB
United Kingdom

[redacted]

Mark.Harris[redacted]
www.tuv-sud.co.uk/wallacewhittle

Registered in Scotland at Scottish Enterprise Technology Park, East Kilbride, Glasgow, G75 0QF. Registration Number: SC215164
TUV SUD Ltd is a member of the TUV SUD Group Company.

Help cut carbon... please don't print this email unless you really need to

This message, together with any attachments, is confidential and may also contain legally protected information. If you are not the addressee or an intended recipient, you are hereby notified that any use, review, distribution or copying of this message or attachments is strictly prohibited. Please notify the sender immediately by email and delete this message and any attachments from your system.

From: David Wilson [mailto:David.Wilson2[redacted]
Sent: 03 June 2015 10:14
To: Harris, Mark
Cc: Julie Miller
Subject: Childrens L2 Isolation Rooms

Mark,

We have had a query on the design of the ventilation within the childrens Isolation rooms on L2. They have queried the extract from the room that this is not compliant with HBN04-0 as it recommends that all extract is from the En suite with a low level transfer grille? Can you comment.

Thanks
David

David Wilson
Commissioning Manager - Construction

Brookfield Multiplex Europe
New South Glasgow Hospitals Project
Hardgate Road
Glasgow, G51 4SX, United Kingdom
[redacted]
E david.wilson2[redacted]
W www.brookfieldmultiplex.com

Please consider the environment before printing this email.

Please consider the environment before printing this e-mail.

This email and any attachments are confidential and may be legally privileged (in which case neither is waived or lost by mistaken delivery). The contents of this email, including any attachments, are intended solely for the use of the individual or entity to whom they are addressed. Any unauthorised use is expressly prohibited. We do not waive any privilege, confidentiality or copyright associated with it. Brookfield collects personal information to provide and market our services (see our privacy policy at http://www.au.brookfield.com for more information about use, disclosure and access). Brookfield's liability in connection with transmitting, unauthorised access to, or viruses in this message and its attachments, is limited to re-supplying this message and its attachments
Message protected by MailControl: e-mail anti-virus, anti-spam and content filtering.
http://www.mailcontrol.com

This email has been scanned for email related threats and delivered safely by Mimecast.
For more information please visit http://www.mimecast.com

NHS Greater Glasgow and Clyde

Women and Children's Directorate

Minute of a meeting Re: BMT Cubicles held on 22nd September 2016 in Conference Room 008, Level 3, Royal Hospital for Children, Glasgow at 11:30 a.m.

In Attendance

Brenda Gibson, Consultant, Haematology (BG)
Billy Hunter, General Manager, Facilities – South (BH)
Teresa Inkster, Consultant Microbiologist (TI)
Jean Kirkwood, SCN, Ward 2a (JK)
Alan Mathers, Chief of Medicine (AM)
Ian Powrie, QEUH Sector Estates Manager (IP)
Jamie Redfern, General Manager, Hospital Paediatrics and Neonatology (JR)
Tom Walsh, Infection Control Manager (TW)

Opening Remarks

JR explained the purpose of the meeting was to discuss 2 points.

- The current status of the 8 BMT cubicles
- The need to upgrade one or two of the cubicles to a higher standard

Current status of BMT cubicles

All 8 cubicles are now functional.

A routine estate maintenance and verification programme is in place (two of the cubicles are to go through a verification process to ensure ventilation and fabric is in place).

Microbiology checks and reporting are in place.

The Transplant programme is up and running successfully.

Upgrade Cubicles

TI requested that despite the above functionality it would be beneficial to upgrade a number of the cubicles.

It was agreed that 4 of the 8 transplant rooms should be upgraded to a higher specification. The upgrade work would need to reach specification SHtMo3-01.

Actions

- Require a design specification (IP and BH will speak to David Loudon)
- Following the design specification develop and implementation plan and secure funding profile to take the project forward.
- On agreement to proceed, evaluate the program of works and consider whether there is a requirement to do the remaining four cubicles.

- In the interim period the remaining 4 cubicles not being upgraded will be used for stand down capacity for BMT patients. Consideration will be given at a later date as to whether these cubicles require to be upgraded in phase 2 of the programme of works.

A further meeting date was not set at this time.

Jamie Redfern
GM HPN

Queen Elizabeth University Hospital
And the Royal Hospital for Children
Isolation Room Review

March 2017

Hulley & Kirkwood Consulting Engineers Ltd
Head Office
Watermark Business Park
305 Govan Road
Glasgow
G51 2SE

(t): 0141 332 5466
(f): 0870 928 1028
(e): hk.glasgow@hulley.co.uk
(w): www.hulley.co.uk

Prepared By:	Colin Peacock
Authorised By:	John McEwan
Revision:	01
Date:	March 2017
File Location:	K:\Documents\70520

Queen Elizabeth University Hospital And the Royal Hospital for Children Isolation Room Review

March 2017

REV	DESCRIPTION	PREPARED BY	DATE
Issue No. 1	First issue	C.Peacock	March 2017
Rev 01	General Update	J McEwan	March 2017

Index:

1.0 Introduction 5

2.0 Existing Systems Overview 6

3.0 Modification from PPVL to Positive Pressure Isolation within Ward 2A 7

4.0 Modification to PPVL Within Adults to Achieve Compliance 8

5.0 Modification to PICU Isolation Rooms Ward 1D 10

6.0 Cost Plan Summary 11

APPENDICES 12

Appendix A – Positive Pressure Isolation Schematic 12
Appendix B – Cost Plan 13

1.0 Introduction

Patient isolation facilities are required in healthcare premises to prevent Healthcare Associated Infection (HAI). There are two main types of patient isolation:

(a) Isolation to protect other patients and staff from a patient with an infection.

(b) Isolation to protect patients from exposure to infection.

SHPN 04: Supplement 1: Isolation Facilities in Acute Settings was published in 2008 and offers guidance on single bedroom isolation facilities including guidance on "enhanced" single rooms with positive pressure ventilated lobbies (PPVL) that offer effective isolation for both types of patient group as noted above. However clause 1.10 of SHPN 04: Supplement 1 states "This supplement does not describe the specialist facilities required in infectious disease units or on wards where severely immune-compromised patients are nursed. Guidance for these facilities shall follow in a further Supplement to SHPN 04." At the date of writing Hulley & Kirkwood are not aware of this additional guidance document being available.

Notwithstanding this guidance does state that ***"the room can be used by both infectious patients and those at risk of infecting others"*** which intimates that the room if constructed in compliance with the guidance and clinically managed then it should be suitable for Hazard Group 3 classification. We are currently seeking guidance from both Public Health England (PHE) and the Department of Health for expert opinion on this issue as they had input to the original research .

Construction of the QEUH & RHC commenced in 2011 and the hospital became fully operational in 2016. There are a number of single bed isolation facilities throughout the facility both in the Adult and the Children's Hospitals.

Hulley & Kirkwood have been asked by Greater Glasgow & Clyde NHS Estates to review the following and we identify scope is limited to these rooms:

(a) Changing of 4No. PPVL isolation rooms (17,18,19 & 20) within Ward 2A to positive pressure isolation rooms for the continued use for transplant and severely immune-compromised patients.

(b) Review of PPVL isolation rooms (43 & 44) within Adults ICU for compliance against HBN 04-01 Supplement 1 (Base Build Specification). However SHPN 04 Supplement 1 will be utilised as this is specific guidance for Scottish Healthcare Facilities. Where any differences are evident these will be identified in ***bold italics***).

(c) Review 2No. Isolation rooms (5 & 12) within PICU and provide comment on compliance.

(d) Coordinate with Department of Health to assist with obtaining confirmation on what Hazard Classification of patient can be nursed within PPVL Isolation Rooms that comply with SHPN/HBN 04-01 Supplement 1.

2.0 Existing Systems Overview

The existing isolation rooms fall into two categories:

(a) Single bed rooms with PPVL and en-suite.

(b) Single bed rooms with PPVL and no en-suite.

The latter type is common in hospital departments where the patient group would be unable to utilise en-suite facilities due to their state of health e.g. intensive care.

All of the facilities are provided with dedicated supply air handling units partnered with dedicated extract systems. The ventilation plant configuration and duty capability is generally in compliance with HBN 04: Supplement 1 however there is no evidence that the supply systems were commissioned taking into consideration the future pressure drop when a Hepa filter would be inserted.

The following typical items are noted as requirements that are either not evident within the installations or are contrary to the guidance in the document. These are discussed further within sections 3.0, 4.0 & 5.0 including scope / cost required to meet requirements identified within section 1.0

- Rooms of type (a) have been provided with the majority of the extract ventilation taken from the bedroom at ceiling level with a lesser volume extracted from the en-suite at ceiling level. This is contrary to clause 4.12 which requires all extract to be taken from the en-suite unless clinical requirements determine that some extract is to be taken from low level at the bedhead.
- Rooms of type (a) have no low level air transfer grilles installed within the door to the en-suite. This is contrary to clause 4.13.
- Excessive access hatches have been installed on the supply and extract ductwork. This is contrary to clause 4.15.
- There appears to be no provision for a gas tight shut off damper or spectacle plate on the extract systems prior to the extract fans. This is contrary to clause 4.14. (Note that al survey of above ceiling runs was not achievable due to operational issues.)
- There are no audio and visual alarms located outside the room lobbies to warn staff of unsafe conditions. This is contrary to clause 4.22.
- There is no provision for a common alarm panel located at the nurse station. This is contrary to clauses 4.6 and 4.22.
- The supply and extract duct access hatches have not been identified as a bio-hazard. This is contrary to clauses 4.15 and 4.19.
- The supply and extract plant and duct systems have not been identified with the rooms that they serve. This is contrary to clauses 4.15 and 4.19.
- Where safe change filter housings have been provided as opposed to vertical discharges they have not been installed external to the building. This is contrary to clause 4.16. Fire compartmentation strategy will require reviewed taking the above into consideration.
- The existing dial pressure gauges monitoring lobby positive pressure are inappropriate for monitoring a 10Pa pressure differential. 30-0-30 Pa is preferred as what has been installed within PICU.
- No envelope permeability test carried out.

3.0 Modification from PPVL to Positive Pressure Isolation within Ward 2A

As noted in the introduction there would not appear to be any published UK NHS guidance on the design of Positive Pressure (PP) Isolation rooms. However it is reasonable to take guidance from SHTM 03-01 and in particular the guidance pertaining to operating theatre ventilation system design.

SHTM 03-01 Part A Table A4 offers advice on air volume flows through doorways between rooms of different cleanliness in order to control cross-contamination. The table advises that an air flow of 0.28m3/s is adequate to offer protection to a single doorway between a room and another one level lower in the hierarchy of cleanliness. With reference to SHTM 03-01 Part A Table A2, if one assumes the patient bedroom to be 'Sterile', the lobby as 'Clean' and the ward corridor as 'Transitional' then it can be concluded that a cascading air flow from the isolation room to the ward corridor at a rate of 0.28m3/s is adequate to prevent cross-contamination. This is based on the premise that when the rooms are in use there will be a management procedure in place such that the 'corridor to lobby' and the 'lobby to bedroom' doors are not opened coincidentally. Furthermore it is assumed that the half door of the 'pair and a half' door sets is only used for bed transport and when the room is in use only the single door is opened.

Since the supply air plants appear to be capable of delivering at least 0.3m3/s to the rooms it is reasonable to allocate 0.28m3/s of this volume to the door protection leaving 0.02m3/s to the en-suite extract. While the 'en-suite' may be classed as 'dirty' in the hierarchy of cleanliness and hence requiring an air flow of 0.47m3/s for 'sterile' to 'dirty' protection, according to SHTM 03-01 Part A Table A4, it is assumed that because the en-suite is only used by the patient it does not present a risk to the patient. The extract rate of 0.02m3/s from the en-suite will maintain the room at a negative pressure with respect to the bedroom and will significantly exceed the air change rate stated in SHTM 03-01 Part A Table A1 for a single room en-suite.

As the rooms have been identified as accommodating severely immune-compromised patients and in order to create the cascade of door protection it is proposed that the existing supply system be modified to re-locate the HEPA filtered supply terminal to the bedroom. (Refer to Drg:70520(57)01 within Appendix A).The existing pressure stabiliser damper installed over the 'lobby to bedroom' door shall be reversed to allow air flow from the room to the lobby at a 10Pa pressure differential. A new pressure stabiliser damper sized for 10Pa differential pressure shall be installed in the wall between the lobby and corridor. The lobby will have a positive pressure differential from lobby to corridor. This provision will create a continuous air flow from the bedroom to the corridor with a target 20Pa positive pressure differential between the bedroom and the ward corridor.

The extract system shall be altered to divert the extract duct currently extracting air from the bedroom to instead extract from the corridor. This will balance the supply air flow and ensure that the other ventilation systems serving the ward are not adversely affected. For room type (a) the extract terminals shall be replaced with terminals with integrated volume control dampers that can be accessed from below through the grilles such that the existing duct mounted volume control dampers can be removed along with any associated ceiling access hatches.

The existing dial pressure gages shall be replaced with gauges with a - 30/0/30Pa scale and shall have the room side impulse tube replaced from the lobby to the patient bedroom to give visual indication of the maintained positive pressure within the bedroom to corridor.

4.0 Modification to PPVL Within Adults to Achieve Compliance

2No. rooms (Bedrooms 43 & 44) within Adults ICU on Level 1 of the adult's hospital have been selected for compliance review. These rooms are new isolation suites comprising in each case an entry lobby, patients single room and en-suite all to be in compliance with HBN 04-01 Supplement 1. However it is likely that observations and recommended modifications identified will be relevant to "all" PPVL isolation rooms with en-suite within the hospital. As they have not been constructed in line with PPVL guidance we would not consider these rooms to be compliant PPVL isolation rooms and as such cannot be validated to same. The rooms do provide isolation given the lobby pressures however the dilution success of the bedroom is called into question with the current extract ventilation grille arrangement.

Ventilation for each suite is provided by a single supply Air Handling Unit (Bedroom 43 – AHU 21/17 and Bedroom 44 – AHU21/16).

Extract is individual from each suite provided by fans located internally within plantroom 21. (21-17-EF01 & 21-16-EF01). Each fan has filter safe change housing. There is no heat recovery.

Supply ventilation to each suite is by a ceiling diffuser within the lobby, complete with HEPA Filter box. Air passes from lobby to the patient's room via a pressure stabiliser at high level above the door, set at 10Pa. No Hepa filter installed at this stage. Extract is from the patient's room through a ceiling mounted extract grille and from a ceiling mounted grille within the en-suite.

Validation Method

The Air Handling Unit and distribution was inspected for compliance with the minimum installation standard set down in SHTM 03-01: Specialised Ventilation for Healthcare Premises, issued by Health Facilities Scotland. This is designed to ensure safe access, permit routine maintenance and reduce the risk of the plant becoming a source of Legionellosis. It was not possible to turn the AHU off so only a limited visual inspection was undertaken. Room was inspected for compliance with SHPN 04 - 01 Supplement 1.

The following non-compliances were identified:

(a) No clear identification of the ventilation plant and what associated suite it serves was evident. Non-compliance with SHPN 04 – Supplement 1 clause 4.15 & 4.19. This has been raised as part of the construction defect monitoring, however solution and programme have yet to be confirmed.

(b) No ductwork was identified throughout its distribution. Inclusive of bio-hazard warning labels. Non-compliance with SHPN 04 – Supplement 1 clause 4.15 & 4.19. This has been raised as part of the construction defect monitoring, however solution and programme have yet to be confirmed.

(c) Although ceiling voids could not be accessed within the rooms it was evident that final connections to grille boxes was by the use of flexible ductwork in lieu of a bend. This is non-compliant to SHTM 03-01 A – Section 5.55

(d) The extract ventilation is not in compliance with SHPN 04- Supplement 1 section 4.12 as extract has been mounted within the patient room ceiling. Example below for bedroom 44 indicates that supply air has a direct path to the ceiling mounted extract within the patient room.

Bedroom 44 – Patient Bedroom Extract Grille as Viewed from Lobby

(e) The isolation suite lobbies are fitted with magnahelic gauge to allow a visual identification of the lobby to corridor pressure. Which is nominally 10pa +ve. No alarm has been installed locally or repeated at the ICU nurse station. This means that key monitoring conditions such as door left/held open, pressure failure and plant failure will not be known until the nursing staff has a reason to visit the room. Non-compliance with SHPN 04 – Supplement 1 clause 4.22

(f) The door between the lobby and isolation room opens inwards so the air flow from the lobby tends to keep it open. It should have been hung the other way so that the air flow tends to shut it in compliance with SHPN 04 – Supplement 1.

(g) Inconsistency with door closers fitted to doors. Non-compliance with SHPN 04 – Supplement 1.

(h) En-suite doors are not fitted with door transfer grilles. Non-compliance with SHPN 04 – Supplement 1 clause 4.13.

(i) Excessive access hatches have been installed on the supply and extract ductwork. This is contrary to clause 4.15.

(j) There appears to be no provision for a gas tight shut off damper or spectacle plate on the extract systems prior to the extract fans. This is contrary to clause 4.14. (Note that a survey of above ceiling runs was not achievable due to operational issues.)

(k) Where safe change filter housings have been provided as opposed to vertical discharges they have not been installed external to the building. This is contrary to clause 4.16. It also breeches the fire compartmentation of the building because the filter housing if not enclosed within a fire rated structure as all the extracts have been grouped together. The strategy requires further review.

(l) The existing dial pressure gauges monitoring lobby positive pressure are - 60/0/60Pa scale and are inappropriate for monitoring a 10Pa pressure differential. 30/0/30 would offer better visual identification.

(m) No envelope permeability test carried out.

Section 6.0 identifies cost plant to allow the suites to be made compliant.

5.0 Modification to PICU Isolation Rooms Ward 1D

2no rooms (Bedrooms 12 & 5) within PICU on Level 2 of the children's hospital have been selected for review. These rooms are new isolation suites comprising in each case an entry lobby and patients single room.

Ventilation for each suite is provided by a single supply Air Handling Unit (Bedroom 12 – AHU 41/15 and Bedroom 5 – AHU41/13).

Extract is individual from each suite provided by fans located externally outside plantroom 41. (41-15-EF01 & 41-13-EF01) There is no heat recovery.

Supply ventilation to each suite is by a ceiling diffuser within the lobby, complete with HEPA Filter box. Air passes from lobby to the patient's room via a pressure stabiliser at high level above the door, set at 10pa. No Hepa filter installed at this stage. Extract is from the patient's room through a ceiling mounted extract grille at the far corner of the room.

VALIDATION METHOD

The Air Handling Unit and distribution was inspected for compliance with the minimum installation standard set down in SHTM 03-01: Specialised Ventilation for Healthcare Premises, issued by Health Facilities Scotland. This is designed to ensure safe access, permit routine maintenance and reduce the risk of the plant becoming a source of Legionellosis. It was not possible to turn the AHU off so only a limited visual inspection was undertaken. Room was inspected for compliance with SHPN 04 - 01 Supplement 1.

The following non-compliances / remedial works were identified:

(a) No clear identification of the ventilation plant and what associated suite it serves was evident. Non-compliance with SHPN 04 – Supplement 1 clause 4.15 & 4.19. This has been raised as part of the construction defect monitoring, however solution and programme have yet to be confirmed.

(b) No ductwork was identified throughout its distribution. Inclusive of bio-hazard warning labels. Non-compliance with SHPN 04 – Supplement 1 clause 4.15 & 4.19. This has been raised as part of the construction defect monitoring, however solution and programme have yet to be confirmed.

(c) Although ceiling voids could not be accessed within the rooms it was evident that final connections to grille boxes was by the use of flexible ductwork in lieu of a bend. This is non-compliant to SHTM 03-01 A – Section 5.55

(d) It was not clear what patient group the rooms were being utilised for however as compliance with SHPN 04 – Supplement 1 had not been achieved this guidance cannot be utilised.

(e) The isolation suite lobbies are fitted with magnahelic gauge to allow a visual identification of the lobby to corridor pressure. Which is nominally 10pa+ve. No alarm has been installed locally or repeated at the PICU nurse station. This means that key monitoring conditions such as door left /held open, pressure failure will not be known until the nursing staff have reason to visit the room.

(f) The door between the lobby and isolation room opens inwards so the air flow from the lobby tends to keep it open. It should have been hung the other way so that the air flow tends to shut it.

(g) No door closers fitted to "any" doors.

6.0 Cost Plan Summary

Detailed cost plan is contained within Appendix B. High level costs are identified below:

(a) Positive Pressure Isolation Rooms Ward 2A

- Room 17: £7316.50
- Room 18: £7316.50
- Room 19: £7316.50
- Room 20: £7316.50
- Common Costs: £9000
- Contingency: £5739.90
- Uplift for Live Working: £7653.20

Total: £51659.10

Nurse central alarm panel should be sized to include the 8no isolation rooms currently within the facility. This gives the option to monitor the PPVL rooms (4no) which are also within the department. Budget Cost £ 8k

(b) PPVL Works to Achieve Compliance to Adults

- Room 43: £6545
- Room 44: £6545
- Common Costs: £9000
- Contingency: £3113.50
- Uplift for Live Working: £4418

Total: £29,821.50

We would recommend that Nurse central alarm panel should be sized to include the 10no isolation rooms currently within the facility. This gives the option to monitor all isolation rooms within the department. A review of how the rooms are managed will be required to determine how many panels will be required. Budget Cost £ 8k

(c) PICU Isolation Rooms

- Room 12: £2225
- Room 5: £2225
- Common Costs: £7000
- Contingency: £1717.50
- Uplift for Live Working: £2290

Total: £15,457.50

Nurse central alarm panel should be sized to include the 4no isolation rooms currently within the facility. This gives the option to monitor all isolation rooms within the department. Budget Cost £ 4k

APPENDICES

Appendix A – Positive Pressure Isolation Schematic

Double click to launch application

70520(57)01-HK_A2.
pdf

Appendix B – Cost Plan

Isolation Rooms Cost Plan Appendix B.xlsx

SYMBOL LEGEND

- FIRE RATED DUCTWORK
- FD — FUSIBLE LINK FIRE DAMPER
- MSFD — MOTORISED SMOKE AND FIRE DAMPER
- Sw — SWITCH
- A — ACTUATOR HEAD
- DIRECTION OF AIR MOVEMENT
- VOLUME REGULATING DAMPER
- FAN
- D — DIFFERENTIAL PRESSURE SWITCH
- ATTENUATOR
- AIR TRANSFER GRILLE
- 2-PORT MOTORISED VALVE
- 3-PORT MOTORISED VALVE
- COOLING COIL
- HEATING COIL
- S — TEMPERATURE SENSOR
- FILTER
- F — FROST THERMOSTAT
- P — PRESSURE SENSOR
- V — VARIABLE SPEED DRIVE
- Sm — SMOKE DETECTOR

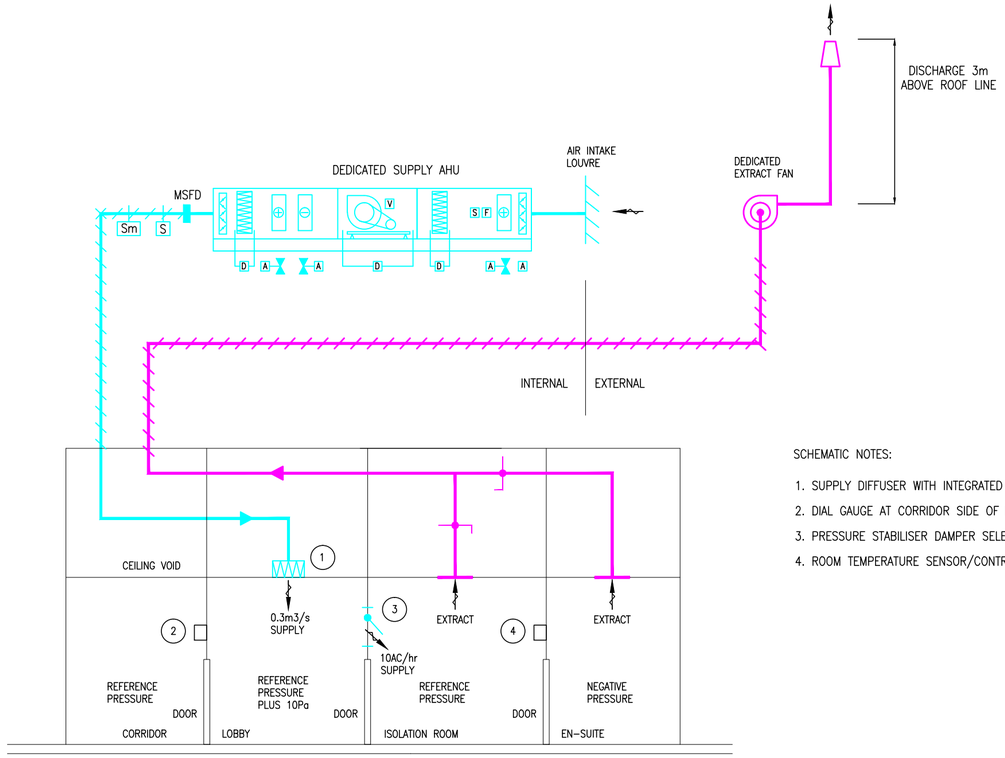

CHILDREN'S HOSPITAL WARD 2A TYPICAL EXISTING ISOLATION ROOM INSTALLATION

SCHEMATIC NOTES:

1. SUPPLY DIFFUSER WITH INTEGRATED TERMINAL H14 HEPA FILTER
2. DIAL GAUGE AT CORRIDOR SIDE OF LOBBY TO INDICATE LOBBY PRESSURE
3. PRESSURE STABILISER DAMPER SELECTED FOR 10Pa PRESSURE DIFFERENTIAL
4. ROOM TEMPERATURE SENSOR/CONTROLLER

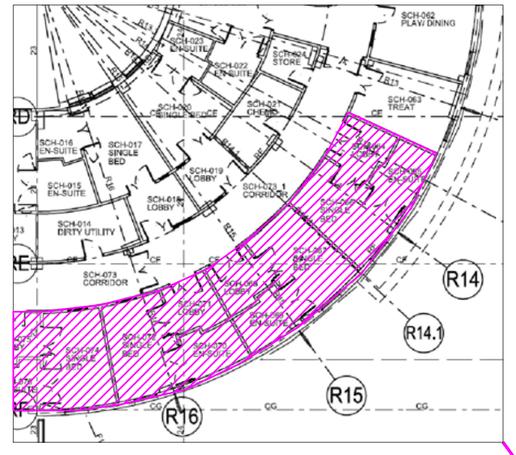

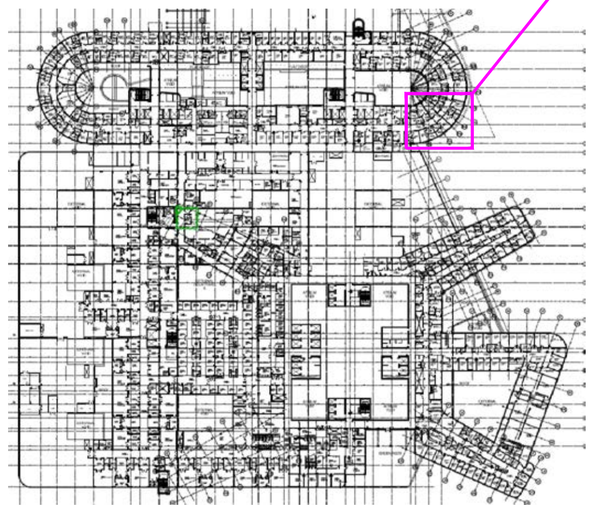

LOCATION PLAN (NTS)

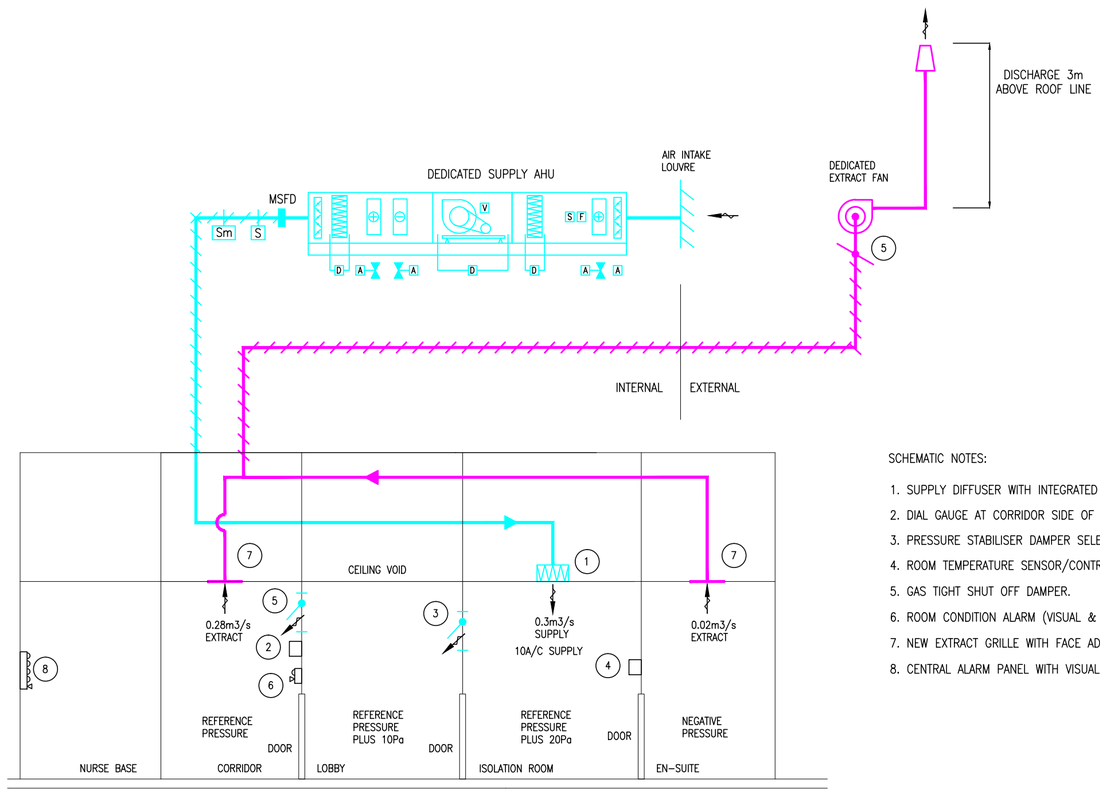

CHILDREN'S HOSPITAL WARD 2A TYPICAL ISOLATION ROOM CONVERSION TO POSITIVE PRESSURE

SCHEMATIC NOTES:

1. SUPPLY DIFFUSER WITH INTEGRATED TERMINAL H14 HEPA FILTER (MONITORED ON BMS AND NURSE BASE PANEL)
2. DIAL GAUGE AT CORRIDOR SIDE OF LOBBY TO INDICATE ISOLATION ROOM PRESSURE (-30/0/+30Pa)
3. PRESSURE STABILISER DAMPER SELECTED FOR 10Pa PRESSURE DIFFERENTIAL
4. ROOM TEMPERATURE SENSOR/CONTROLLER
5. GAS TIGHT SHUT OFF DAMPER.
6. ROOM CONDITION ALARM (VISUAL & SOUNDER/MUTE)
7. NEW EXTRACT GRILLE WITH FACE ADJUSTABLE VOLUME CONTROL DAMPER
8. CENTRAL ALARM PANEL WITH VISUAL FOR EACH ROOM, ROOM HEPA CONDITION AND COMMON SOUNDER/MUTE

Date	Description	Rev	By

Revision Description

hulley & kirkwood
consulting engineers
Glasgow
Head Office
Watermark Business Park
Govan Road
Glasgow
G51 2SE
T: 0141 332 5466
E: hk.glasgow@hulley.co.uk
...Making Buildings Work

Project:
QEUH & RHC
ISOLATION ROOMS (17, 18, 19 & 20)

Drawing Title:
PROPOSED ISOLATION ROOMS VENTILATION MODIFICATIONS

Drawing Number:
70520(57)01

Revision:
Date: 07/03/2017
Scale: NTS
Drawn By:
CAD Dwg File: 70520(57)01.dwg
Arch. Base Dwg:

Issue Status:
Preliminary

A2

A49618520

Invitation to Tender – RHC Ward 2A Isolation Room Ventilation Configuration

Specifications – Tender Issue

Compiled by: Ewen Forsyth, Ian Powrie & John McEwan

Date: 30 May 2017

CONTENTS

1 Overview~~Overview~~……..**Page 16~~3~~**

Error! Reference source not found.~~1.1~~ **Error! Reference source not found.**~~Requirements for the Plan~~

1.2 Subcontracting

2 Mandatory Requirements~~Mandatory Requirements~~……...**Page 17~~4~~**

2.1 Contract Governance

2.2 General Mandatory Requirements

Error! Reference source not found.~~2.3~~ Mandatory Pre-Works Requirements~~Mandatory Pre Works Requirements~~

2.4~~2.4~~ General Pre Works Requirements

2.5

Formatted: Font: Arial

Formatted: Font: Arial

Works Requirements/Site Operations~~Works Requirements/Site Operations~~

Error! Reference source not found.~~3~~ Contract Data…….....**Page 6**

04 Introduction

Formatted: Normal, Right: -0.29 cm

Patient isolation facilities are required in healthcare premises to prevent Healthcare Associated Infection (HAI). There are two main types of patient isolation:

(a) Isolation to protect other patients and staff from a patient with an infection;
(b) Isolation to protect patients from exposure to infection.

Ward 2a (Shiehallion) of the Royal Hospital for Children (RHC) currently has isolation rooms constructed as Positive Pressure Ventilated Lobby (PPVL).

This specification details the requirement to carry out the changing of 4 no. PPVL isolation rooms (rooms 17 – 20) within Ward 2a to positive pressure isolation rooms for continued use for transplant and severely immune-compromised patients.

It is important to note that the works will be carried out in a live ward environment and management of cleanliness is a critical factor to ensure no cross-contamination within the live ward environment.

The project is to be priced based on the following potential scenarios:

(a) All 4 no. rooms are available to work in simultaneously (Rooms 17, 18, 19 & 20);

(b) 2 no. rooms are initially available (rooms 17 & 18) and on successful validation and acceptance by clinical team, rooms 19 & 20 will be made available.

Existing Systems Overview

The existing 4 no. isolation rooms are single bedrooms with PPVL and an en-suite bathroom. These are located within Ward 2a. Please refer to drawing 70520(57)01 Proposed Isolation Rooms Ventilation Modifications within Appendix A.

Each room currently has its own dedicated supply & extract systems and existing plant will remain:

- Room 17 – Supply AHU 41/33 & Extract 41-33-EF01;
- Room 18 – Supply AHU 41/32 & Extract 41-32-EF01;
- Room 19 – Supply AHU 41/31 & Extract 41-31-EF01;
- Room 20 – Supply AHU 41/30 & Extract 41-30-EF01.

The as-built ductwork layout ME-ZC-02-PL-524-508 Rev Z1 (please refer to Appendix C) identifies the current ventilation distribution within the 4 no. isolation rooms.

The Contractor will be responsible for verifying final design, on-site service coordination and measurements prior to going into manufacture for new ventilation installations.

Modification from PPVL to Positive Pressure Isolation within Ward 2a

There is currently no specific published NHS UK guidance on the design of Positive Pressure (PP) Isolation rooms. However, guidance principles from SHTM 03-01 have been applied in particular the guidance pertaining to operating theatre ventilation system design.

SHTM 03-01 Part A Table A4 offers advice on air volume flows through doorways between rooms of different cleanliness in order to control cross-contamination. The table advises that airflow of 0.28m³/s is adequate to offer protection to a single doorway between a room and another one level lower in the hierarchy of cleanliness. With reference to SHTM 03-01 Part A Table A2, if the patient bedroom is deemed to be 'Sterile' and lobby as 'Clean' and the ward corridor as 'Transitional' then it can be concluded that a cascading airflow from the isolation room to the ward corridor at a rate of 0.28m³/s is adequate to prevent cross-contamination. This is based on the premise that when the rooms are in use there will be a management procedure in place such that the corridor to lobby and the lobby–to-bedroom doors are not open at the same time. Furthermore it is assumed that, the half door of the pair–and-a-half door sets is only used for bed transport and when the room is in use, only the single door must be opened.

Since the supply air plants are capable of delivering at least 0.3m³/s to the rooms, it is reasonable to allocate 0.28m³/s of this volume to the door protection, leaving 0.02m³/s to the en-suite extract. While the en-suite may be classed as 'dirty' in the hierarchy of cleanliness and hence requiring an airflow of 0.47m³/s for 'sterile' to 'dirty' protection, according to SHTM 03-01 Part A Table A4, it is assumed that because the en-suite is only used by the patient it does not present a risk to the patient. The extract rate of 0.02m³/s from the en-suite will maintain the room at a negative pressure with respect to the bedroom and will significantly exceed the air change rate stated in SHTM 03-01 Part A Table A1 for a single room en-suite.

As the rooms have been identified as accommodating severely immune-compromised patients and will be provided with 10 air changes per hour (ACH) in order to create the cascade of door protection, it is proposed that the existing supply system be modified to re-locate the high efficiency particulate air (HEPA) filtered supply terminal to the bedroom. (Please refer to Drg: 70520(57)01 within Appendix A.) The existing pressure stabiliser damper installed over the lobby–to-bedroom door shall be reversed to allow airflow from the room to the lobby at a 10Pa pressure differential. A new pressure stabiliser damper sized for 10Pa differential pressure will be installed in the wall between the lobby and corridor. The lobby will have a positive pressure differential from lobby to corridor. This provision will create a continuous airflow from the bedroom to the corridor with a target 20Pa positive pressure differential between the bedroom and the ward corridor.

The extract system will be altered to divert the extract duct currently extracting air

from the bedroom to instead extract from the corridor. This will balance the supply airflow and ensure that the other ventilation systems serving the ward are not adversely affected. The extract terminals will be replaced with terminals with integrated volume control dampers that can be accessed from below through the grilles such that the existing duct-mounted volume control dampers can be removed along with any associated ceiling access hatches.

Existing dial pressure gauges will be replaced with gauges with a -30/0/30Pa scale and will have the room-side impulse tube replaced from the lobby to the patient bedroom to give visual indication of the maintained positive pressure between the bedroom and corridor.

Description of Works

Site Accommodation

The following is noted:

- Space will be made available externally for a single container to facilitate site office/storage. Please refer to the HAI-SCRIBE document within Appendix B;
- The Contractor may use the on-site facilities for toilets and catering provided that works clothing is removed before using any catering facilities;
- No materials or equipment are to be stored outwith the site accommodation or works area;
- The works area must be secure at all times;
- Working Hours are limited to 8am – 6pm, 7 days per week.

Constraints on how the Contractor Provides the Works

Works are to be implemented during normal daytime working hours and the Contractor must leave the working areas in a clean and tidy condition at the end of each working day. The Royal Hospital for Children is operational 24 hours and the works must be implemented with the utmost consideration for all building users and any disruption must be kept to an absolute minimum. Should works require to be temporarily stopped, the Contractor must liaise with local Estates Personnel and the Contract Administrator to agree working arrangements.

Isolate Works Area

The Contractor will supply/install and seal a solid partition HAI containment to the site that shall be effectively airtight to prevent migration of dust. Expectations of this hoarding are as indicated in *Photo 1*.

Formatted: Font: Italic

Photo 1.

Suitable signage will be provided to indicate works area/no entry and contact details.

A differential pressure gauge will be taken from one of the existing rooms and be reinstated within the temporary partition to offer visual indication of maintained negative pressure.

Create Safe Area

The existing room supply air handling unit (AHU) plant will be shut down and the associated dampers closed. The existing extract systems will be maintained in operation to negatively pressurise the works area with visible indication via the differential pressure gauge installed within the works area temporary partition. The extract fan speed will be adjusted on the existing frequency converter drives to maintain a negative pressure with the entrance door from lobby–to-corridor closed.

Builderswork Elements

All builders work will form part of the contract and will comprise all alterations to ceilings, forming of holes in partitions, fire sealing, sealing perimeter to achieve air permeability test, making good, decoration and final clean.

The hospital construction developer has outstanding snagging items to remove and repair interstitial patient viewing window blinds. Where required to do so, the successful Contractor will provide access to the hospital construction developer to facilitate these remedial works while the rooms are out of service during the construction phase of the ventilation works. For the purposes of the tender, the Contractor will allow for the existing solid ceilings to the bedroom, en-suite and lobby to be carefully removed and reinstated in their entirety. This will be reviewed once ductwork routes are coordinated.

The following must also be undertaken by the Contractor:

- A hole will be formed in the wall between the lobby and corridor for each room for the installation of a new pressure stabiliser;
- Form new holes in walls above ceilings for diverted ductwork;
- Installation of a new termination for the differential pressure impulse tube within the bedroom ceiling;
- Installation of the supply diffuser within the bedroom ceiling;
- Installation of the extract grille in the existing tiled corridor ceiling;
- Works associated with dropping a new electrical conduit down the existing partition between bedroom and corridor;
- Installation of the new alarm panel at the nurses station. For the purposes of tender, the Contractor should allow that the existing partition will require reinforcement for mounting the alarm panel;
- Re-install all existing ceiling-mounted services including but not limited to light fittings, smoke detectors and sprinklers;
- Carry out room air leakage testing via air permeability specialists.

On completion of the works, the Contractor will provide a clinical deep clean (to HAI clinical clean standards) of the complete works area. Once cleaned, NHS Infection Control Team (ICT) will carry out a microbiological analysis of the environment. If the environment fails these tests, the Contractor will be required to repeat the clinical deep clean until the baseline results have been achieved.

Ductwork and Grille Modifications

The Contractor will undertake to:

- Take down existing supply diffuser from the bedroom lobbies and relocate to the bedroom in a central location above the bed;
- Divert existing 315mm diameter galvanised spiral wound supply duct from the bedroom lobby into the bedroom and connect to supply diffuser. Flexible connections must not be utilised;
- Supply and install new HEPA filter in supply diffuser housing. Provide challenge port at AHU discharge;
- Modify en-suite 160mm diameter galvanised spiral wound duct to remove volume control damper;
- Supply and install a new en-suite extract grille suitable of 20L/s extract and with face-adjustable integral Volume Control Damper (VCD) and removable core;
- Take down existing extract grille from the bedroom with associated VCD and relocate grille and VCD to the corridor;
- Divert existing 315mm diameter galvanised spiral wound extract duct from the bedroom into the corridor and connect to extract grille;
- Take down existing pressure stabiliser damper in the bedroom/lobby wall and reinstate with reverse airflow;
- Supply and install a new pressure stabiliser damper in wall between the corridor and lobby.

Electrical/Controls Installations

The Contractor will undertake to:

- Supply and install a new centralised alarm panel at the nurse base. This panel will be designed, supplied and installed with capability of alarm connections to the site-wide Schneider Controls, and be open protocol. The panel will be surface-mounted and be of stove enamel white or equal finish. The panel will incorporate a sounder and mute for common alarm condition and green (healthy) and red (alarm) lamps for each room. For each room the panel will monitor terminal HEPA healthy condition, room magnahelic pressure healthy condition (time delay required to allow for open door conditions) and supply AHU and extract fan healthy condition. The panel will interface with the existing Building Management System (BMS) for receipt of information on the plant status and relay of information for the room status. The panel supplier will allow for graphics and software update at the head end to accommodate the alterations. All interfaces must be open protocol;
- Supply and install a new magnahelic gauge mounted on the corridor wall outside each room with a -30/0/30Pa scale. The gauge will offer visual indication of the room pressure (+20Pa design) via a dial face or digital readout and a tell tale interface with the alarm/monitoring system for room low pressure;
- Supply and install an individual sounder and mute alarm on the corridor wall of each room to provide a local individual room-specific alarm;

- Supply and install all necessary impulse tube, cable, containment, field mounted equipment and power supply from local distribution as required to provide a fully operational installation.

Test & Commission

The Contractor will undertake to:

- Pressure test the supply and extract ductwork installations to DW/143 medium pressure;
- Clean supply and extract ductwork systems for all bedrooms to TR/19 PDI Level 3;
- Set to work existing supply and extract systems and balance to achieve design airflows as stated on drawing 70520(57)01;
- Dispersed Oil Particulate (DOP) test the HEPA filters;
- Adjust pressure stabiliser blades as required for stability under steady state conditions;
- Function check all alarm interfaces.

Validation and Demonstration

Ventilation Plant and room validation must be carried out as per requirements set out within SHTM 03-01 Ventilation for Healthcare Premises Part A – Design and validation. All air sampling and microbiological sampling will be carried out by NHS ICT and does not form part of this tender. However, clinical deep cleaning does form part of this tender and is critical to the successful air sampling outcome, and must meet the requirements of SHTM 03-01. The room will require to be re-cleaned to clinical standards until the room passes the air quality test protocol.

Operation & Maintenance (O & M) Information

The Contractor must:

- Obtain and modify the existing ventilation installation drawings to reflect the modifications and provide in hard copy, pdf and editable electronic format;
- Provide hard copy and pdf all relevant manufacturers' literature, commissioning results and test certificates;
- Supply all electrical wiring and panel diagrams in hard copy and pdf.

All hard copy information must be provided in hard-backed ring binder folders complete with all Contractor and subcontractor contact details.

Post-installation demonstrations will comprise two half-day sessions. One session will be provided for the clinical staff to inform them on the operation of the rooms from a user perspective. One session will be provided for NHS Estates staff to inform them on the technical operation of the rooms.

Client Liaison

Prior to and throughout the works duration, the Contractor will allow for:

- Contract pre-start meeting and associated preliminaries;
- Daily liaison with the NHS project manager and clinical management team as required;
- Weekly project progress meetings (minuted).

Contractor Design

There is no contractor design.

Drawings & Specifications

There are drawings necessary for the works and tenderers should refer to the *Appendices* within the Quick Quote advert:

Appendix A: Positive Pressure Isolation Schematic;
Appendix B: HAI-SCRIBE;
Appendix C: 'As built' ventilation ductwork layout drawing number ME-ZC-02-PL-524-508.

Services and other things provided by the Employer

N/A.

Pre-construction Health & Safety Information

The Health & Safety file for the buildings maybe seen by appointment with the local Estates Manager.

Site Information

The Royal Hospital for Children is located on the Queen Elizabeth University Hospital (QEUH) site in Glasgow.

Access to the Site

Access to the site is to be agreed with the client prior to works commencing.

Attention is drawn to the fact that storage facilities within the site/existing building will be very limited and the Contractor will require to make arrangements for the delivery of and removal of materials to and from the site in such quantities as are appropriate to the limited storage facilities available or provided.

The Contractor's attention is also drawn to the requirement to limit the amount of materials arising from the downtakings being stored on site.

All existing fire escape doors, corridors & stairs must be kept clear at all times. The Contractor must liaise with the local Estates Manager and the NHS GG&C Fire Officer to maintain the integrity of all fire escape routes.

Parking

Restrictions on parking of the Contractor's and employees' vehicles: parking of the Contractor's and the Contractor's employees' vehicles are permitted within the QEUH site by prior arrangement with the local Estates Manager.

Use of the Site

- General: do not use the site for any purpose other than carrying out the Works;
- Limitations: the site and all other areas of the existing building can be categorised as follows:
  - Areas of the building(s)/site which will be in sole possession of the Contractor during the works;
  - All areas of the building which will remain occupied and in use at all times by NHS GG&C.

The Contractor must only use the lift identified for transport personnel, materials or plant during the currency of the works.

Surrounding Land/Building Uses

- General: Adjacent or nearby uses or activities are as follows:
  - Healthcare provision by NHSGG&C in various buildings;
  - Office and training accommodation for NHSGG&C and University of Glasgow employees and students.

Health & Safety Hazards

General: the nature and condition of the site/building cannot be fully and certainly ascertained before it is opened up. However, the following hazards are or may be present:

- Asbestos – RHC was constructed after 2000 and no Asbestos Containing Materials (AMCs) were used in its construction.

Information: the accuracy and sufficiency of this information is not guaranteed by the Employer or the Employer's representative. The Contractor must ascertain if any additional information is required to ensure the safety of all persons and the Works.

Site staff: the Contractor must draw to the attention of all personnel working on the site the nature of any possible contamination and the need to take appropriate precautionary measures.

Site Visits

Assessment: ascertain the nature of the site, access thereto and all local conditions and restrictions likely to affect the execution of the Works.

Tenderers are recommended to inspect the existing buildings and to fully familiarise themselves with the local conditions, accessibility of the site, means of access and egress for labour, plant & materials, the full extent and character of the operations, the supply and conditions affecting labour, plant and materials and the execution of the contract generally. No additional costs will be permitted on account of any omission or error arising from the lack of knowledge nor will additional costs be allowed for multiple handling of materials within the site or resulting from the means of access to the site.

Inspection of the site is especially recommended in order that the tenderer may assess the risks involved and the protective measures necessary to combat vandalism, theft and all other risks due to the location of the site.

Arrangements for visit:

Site visit to be arranged with; Deputy General Manager (Estates), Ian Powrie [redacted]

Price List

Please see appended within the Quick Quote advertisement.

General Contract Information~~General Contract Information~~.....**Page 16**
4.1 Site Meetings~~Site Meetings~~
4.2 Roles and Responsibilities

5 Award Criteria~~Award Criteria~~.....**Page 18**
5.1 Commercial
5.2 Quality

Formatted: Font: Arial

0~~6~~ Please provide answers to the following questions:

Q1: Please provide a statement of your understanding and interpretation of the scope of these works and your company's role within. Describe how your company would maintain an overview of the works, including planning, monitoring and quality control, through to completion and any post-works remediation.

Points to consider include dealing with a 24/7 operational site, working collaboratively with NHS GG&C Estates personnel and conflict resolution, etc.

Q2: Please provide your company's plan of work/method statements and standard operating procedures that you would adopt on these works, and include any additional processes and/or procedures that your company would implement in executing these works. Please provide details of your proposed employee/operative structure for these works. Include an organogram showing a management structure including supervisory and support staffing proposed.

Please note that any changes to staff during the contract must be agreed with Estates and Procurement personnel in advance.

Q3: Please provide a programme of works, as per contract data provided in this tender. Tenderers should submit a programme which complies with the requirements of the Contract Data, shows critical path & float highlights key dates for carrying out the various works to specific areas and completion.

Q4: Please provide details of how your company would limit damages on site and negate the risk of damages occurring. Please also detail your reporting lines and methods to make good any damages and/or remediation.

Q5: Please demonstrate your organisation's approach to delivering community benefits or achieving social value through these works; e.g., by providing training opportunities, apprenticeships or investment (monetary or otherwise) in the local community.

Award Criteria Tables

Commercial (60% of available marks)

Quality (40% of available marks)

Question No.	Weighting (%)
1	30
2	30
3	20
4	20
5	0

Scoring Methodology~~Scoring Methodology~~.....**Page 20**

1. Overview

1.1 Introduction

This document has been prepared in relation to the proposed Ward 2A Isolation Room Ventilation Configuration at The Royal Hospital for Children (RHC).

1.2 Subcontracting

Contractors applying using nominated subcontract provision **must** clearly indicate in their response:

- Which segment of the service will be delivered by the subcontractor;
- How the Contractor and subcontractor will collaborate effectively and ensure a seamless approach to the delivery of the service;
- The mechanism by which quality issues, monitoring and evaluation issues, disputes and disagreements will be agreed and resolved.

Contractors **must** ensure when using subcontractors that the subcontractors adhere to all Mandatory requirements and General Information stated in this Invitation to Tender (ITT) and all documents contained within. Confirmation of this will be required and any subcontractors will be subject to the same quality assessments prior to being accepted onto this contract.

By subcontracting, the Contractor assumes full responsibility for any work conducted by the subcontractor as part of this contract.

Contractors applying using nominated subcontract provision **must** provide the following information with their tender return:

- Specialism (e.g., builders work, ventilation works, etc.);
- Proportion being subcontracted;
- Name of proposed subcontractor.

2. Mandatory Requirements

2.1 Contract Governance

This framework will be governed by the NEC3 Term Service Short Contract (TSSC). Details are appended within the Quick Quote.

2.2 General Mandatory Requirements

Contractors must adhere to the General Scope of Works document appended within the Quick Quote, and sign agreement of same.

2.3 Mandatory Pre-Works Requirements

All information created and collated as a result of any contract placed from this tender will be the property of NHS GG&C and will be transferred to NHS GG&C prior to or upon completion of every order as appropriate or upon request by NHS GG&C personnel.

2.4 General Pre Works Requirements

NHS GG&C are not obliged to issue a purchase order until such times as the proposed sum has been agreed and funding confirmed. It is wholly at the discretion of NHS GG&C as to whether to accept the Contractor's proposed price. In the event that NHS GG&C does not issue a purchase order, NHS GG&C will have no liability for any fees or costs which may be incurred by the Contractor.

The Contractor will liaise with the relevant Estates personnel prior to commencement of work. Some items for consideration are:

- On-site storage and working areas for materials, plant, equipment, accommodation and vehicles;
- Provision of water and electricity (water and electricity are generally available from existing installations, although this cannot always be guaranteed. It is therefore the responsibility of the Contractor to ensure these are either available or require to be provided). There will be no additional charges honoured if these are not available on site. Where NHS GG&C provide water and electricity, these will be provided free of charge but subject to agreement with NHS GG&C prior to work commencing and will be withdrawn should excessive use or waste be encountered. The Contractor will be responsible for the provision of all hoses, leads, connections, etc., and for their removal upon completion. Where power is provided, it will be 240 volts 50 cycles/single phase/AC supply. (Note: this should be suitably transformed to 110V for the use of equipment/tools by the Contractor.) It is the Contractor's responsibility to supply and install a 30ma RCD unit (sized accordingly). The RCD should be installed on the away side of the supply point.

2.5 Works Requirements/Site Operations

Works will be completed with the involvement of the respective Estates personnel. Furthermore, liaison may also take place between the Contractor and one or more of the following:

- Estates personnel for the relevant premises;
- Project manager if different to the instructing officer.

The Contractor will be expected to co-operate and work collaboratively with NHS GG&C Estates personnel.

The Contractor will be held solely responsible for the quality of their work and, as such, should NHS GG&C incur additional costs due to ineffective, poor quality or incomplete work then all such costs will be recoverable from the Contractor under this contract and at any reasonable time including after any termination of the contract. This clause will come into effect should any one single issue be identified.

Any re-visits to resolve issues where discrepancies are identified to be the fault of the Contractor will be at the expense of the Contractor and no additional monies will be paid by NHS GG&C.

The highest standards of housekeeping are expected at all times. Areas must be left clean, tidy and free from waste. The Contractor is responsible for removing all debris, rubbish and coverings and be fully responsible for cleaning the areas affected by the works internally and externally on completion. Any instances of untidiness on arrival on site must be reported immediately to the relevant Estates contact.

Upon completion of works, any work undertaken by NHS GG&C personnel or appointed contractors to make good any debris or the like left over from any associated works, will be liable to be chargeable to the Contractor.

The Contractor will ensure that its employees at all times carry out all parts of the contract in compliance with NHS GG&C's Waste Management policies, which are available from the NHS GG&C website.

3. Contract Data

Project Preliminaries

Tenderers eligible to price the tender documents are currently on Lot 13 (NHS Greater Glasgow & Clyde) of NHS National Procurement's Minor Works framework (£50,000 – £250,000): NP827-15.

The following items should also be noted:

- Tender documents (Drawings/Specification) are detailed within the Works Information;
- Existing building uses are included within the Site Information;
- Working hours are as indicated in the Site/Works Information;
- Works by others is included within the Site Information;
- Health & Safety information – to follow;
- Methods & sequencing of the works – refer to Works Information.

Works Information

Description of the works

Introduction

Patient isolation facilities are required in healthcare premises to prevent Healthcare Associated Infection (HAI). There are two main types of patient isolation:

(a) Isolation to protect other patients and staff from a patient with an infection;
(b) Isolation to protect patients from exposure to infection.

Ward 2a (Shiehallion) of the Royal Hospital for Children (RHC) currently has isolation rooms constructed as Positive Pressure Ventilated Lobby (PPVL).

This specification details the requirement to carry out the changing of 4 no. PPVL isolation rooms (rooms 17 – 20) within Ward 2a to positive pressure isolation rooms for continued use for transplant and severely immune-compromised patients.

It is important to note that the works will be carried out in a live ward environment and management of cleanliness is a critical factor to ensure no cross-contamination within the live ward environment.

The project is to be priced based on the following potential scenarios:

(a) All 4 no. rooms are available to work in simultaneously (Rooms 17, 18, 19 & 20);

(b) 2 no. rooms are initially available (rooms 17 & 18) and on successful validation and acceptance by clinical team, rooms 19 & 20 will be made available.

Existing Systems Overview

The existing 4 no. isolation rooms are single bedrooms with PPVL and an en-suite bathroom. These are located within Ward 2a. Please refer to drawing 70520(57)01 Proposed Isolation Rooms Ventilation Modifications within Appendix A.

Each room currently has its own dedicated supply & extract systems and existing plant will remain:

- Room 17 – Supply AHU 41/33 & Extract 41-33-EF01;
- Room 18 – Supply AHU 41/32 & Extract 41-32-EF01;
- Room 19 – Supply AHU 41/31 & Extract 41-31-EF01;
- Room 20 – Supply AHU 41/30 & Extract 41-30-EF01.

The as-built ductwork layout ME-ZC-02-PL-524-508 Rev Z1 (please refer to Appendix C) identifies the current ventilation distribution within the 4 no. isolation rooms.

The Contractor will be responsible for verifying final design, on-site service coordination and measurements prior to going into manufacture for new ventilation installations.

Modification from PPVL to Positive Pressure Isolation within Ward 2a

There is currently no specific published NHS UK guidance on the design of Positive Pressure (PP) Isolation rooms. However, guidance principles from SHTM 03-01 have been applied in particular the guidance pertaining to operating theatre ventilation system design.

SHTM 03-01 Part A Table A4 offers advice on air volume flows through doorways between rooms of different cleanliness in order to control cross-contamination. The table advises that airflow of 0.28m³/s is adequate to offer protection to a single doorway between a room and another one level lower in the hierarchy of cleanliness. With reference to SHTM 03-01 Part A Table A2, if the patient bedroom is deemed to be ‘Sterile’ and lobby as ‘Clean’ and the ward corridor as ‘Transitional’ then it can be concluded that a cascading airflow from the isolation room to the ward corridor at a rate of 0.28m³/s is adequate to prevent cross-contamination. This is based on the premise that when the rooms are in use there will be a management procedure in place such that the corridor to lobby and the lobby–to-bedroom doors are not open at the same time. Furthermore it is assumed that, the half door of the pair–and-a-half door sets is only used for bed transport and when the room is in use, only the single door must be opened.

Since the supply air plants are capable of delivering at least 0.3m³/s to the rooms, it is reasonable to allocate 0.28m³/s of this volume to the door protection, leaving 0.02m³/s to the en-suite extract. While the en-suite may be classed as ‘dirty’ in the hierarchy of cleanliness and hence requiring an airflow of 0.47m³/s for ‘sterile’ to ‘dirty’ protection, according to SHTM 03-01 Part A Table A4, it is assumed that because the en-suite is only used by the patient it does not present a risk to the patient. The extract rate of 0.02m³/s from the en-suite will maintain the room at a

negative pressure with respect to the bedroom and will significantly exceed the air change rate stated in SHTM 03-01 Part A Table A1 for a single room en-suite.

As the rooms have been identified as accommodating severely immune-compromised patients and will be provided with 10 air changes per hour (ACH) in order to create the cascade of door protection, it is proposed that the existing supply system be modified to re-locate the high efficiency particulate air (HEPA) filtered supply terminal to the bedroom. (Please refer to Drg: 70520(57)01 within Appendix A.) The existing pressure stabiliser damper installed over the lobby–to-bedroom door shall be reversed to allow airflow from the room to the lobby at a 10Pa pressure differential. A new pressure stabiliser damper sized for 10Pa differential pressure will be installed in the wall between the lobby and corridor. The lobby will have a positive pressure differential from lobby to corridor. This provision will create a continuous airflow from the bedroom to the corridor with a target 20Pa positive pressure differential between the bedroom and the ward corridor.

The extract system will be altered to divert the extract duct currently extracting air from the bedroom to instead extract from the corridor. This will balance the supply airflow and ensure that the other ventilation systems serving the ward are not adversely affected. The extract terminals will be replaced with terminals with integrated volume control dampers that can be accessed from below through the grilles such that the existing duct-mounted volume control dampers can be removed along with any associated ceiling access hatches.

Existing dial pressure gauges will be replaced with gauges with a -30/0/30Pa scale and will have the room-side impulse tube replaced from the lobby to the patient bedroom to give visual indication of the maintained positive pressure between the bedroom and corridor.

Description of Works

Site Accommodation

The following is noted:

- Space will be made available externally for a single container to facilitate site office/storage. Please refer to the HAI-SCRIBE document within Appendix B;
- The Contractor may use the on-site facilities for toilets and catering provided that works clothing is removed before using any catering facilities;
- No materials or equipment are to be stored outwith the site accommodation or works area;
- The works area must be secure at all times;
- Working Hours are limited to 8am – 6pm, 7 days per week.

Constraints on how the Contractor Provides the Works

Works are to be implemented during normal daytime working hours and the Contractor must leave the working areas in a clean and tidy condition at the end of each working day. The Royal Hospital for Children is operational 24 hours and the works must be implemented with the utmost consideration for all building users and

any disruption must be kept to an absolute minimum. Should works require to be temporarily stopped, the Contractor must liaise with local Estates Personnel and the Contract Administrator to agree working arrangements.

Isolate Works Area

The Contractor will supply/install and seal a solid partition HAI containment to the site that shall be effectively airtight to prevent migration of dust. Expectations of this hoarding are as indicated in *Photo 1*.

Photo 1.

Suitable signage will be provided to indicate works area/no entry and contact details.

A differential pressure gauge will be taken from one of the existing rooms and be reinstated within the temporary partition to offer visual indication of maintained negative pressure.

Create Safe Area

The existing room supply air handling unit (AHU) plant will be shut down and the associated dampers closed. The existing extract systems will be maintained in operation to negatively pressurise the works area with visible indication via the differential pressure gauge installed within the works area temporary partition. The extract fan speed will be adjusted on the existing frequency converter drives to maintain a negative pressure with the entrance door from lobby–to-corridor closed.

Builderswork Elements

All builders work will form part of the contract and will comprise all alterations to ceilings, forming of holes in partitions, fire sealing, sealing perimeter to achieve air permeability test, making good, decoration and final clean.

The hospital construction developer has outstanding snagging items to remove and repair interstitial patient viewing window blinds. Where required to do so, the successful Contractor will provide access to the hospital construction developer to facilitate these remedial works while the rooms are out of service during the construction phase of the ventilation works. For the purposes of the tender, the Contractor will allow for the existing solid ceilings to the bedroom, en-suite and lobby to be carefully removed and reinstated in their entirety. This will be reviewed once ductwork routes are coordinated.

The following must also be undertaken by the Contractor:

- A hole will be formed in the wall between the lobby and corridor for each room for the installation of a new pressure stabiliser;
- Form new holes in walls above ceilings for diverted ductwork;
- Installation of a new termination for the differential pressure impulse tube within the bedroom ceiling;
- Installation of the supply diffuser within the bedroom ceiling;
- Installation of the extract grille in the existing tiled corridor ceiling;
- Works associated with dropping a new electrical conduit down the existing partition between bedroom and corridor;
- Installation of the new alarm panel at the nurses station. For the purposes of tender, the Contractor should allow that the existing partition will require reinforcement for mounting the alarm panel;
- Re-install all existing ceiling-mounted services including but not limited to light fittings, smoke detectors and sprinklers;
- Carry out room air leakage testing via air permeability specialists.

On completion of the works, the Contractor will provide a clinical deep clean (to HAI clinical clean standards) of the complete works area. Once cleaned, NHS Infection Control Team (ICT) will carry out a microbiological analysis of the environment. If the environment fails these tests, the Contractor will be required to repeat the clinical deep clean until the baseline results have been achieved.

Ductwork and Grille Modifications

The Contractor will undertake to:

- Take down existing supply diffuser from the bedroom lobbies and relocate to the bedroom in a central location above the bed;
- Divert existing 315mm diameter galvanised spiral wound supply duct from the bedroom lobby into the bedroom and connect to supply diffuser. Flexible connections must not be utilised;
- Supply and install new HEPA filter in supply diffuser housing. Provide challenge port at AHU discharge;
- Modify en-suite 160mm diameter galvanised spiral wound duct to remove volume control damper;
- Supply and install a new en-suite extract grille suitable of 20L/s extract and with face-adjustable integral Volume Control Damper (VCD) and removable core;
- Take down existing extract grille from the bedroom with associated VCD and relocate grille and VCD to the corridor;
- Divert existing 315mm diameter galvanised spiral wound extract duct from the bedroom into the corridor and connect to extract grille;
- Take down existing pressure stabiliser damper in the bedroom/lobby wall and reinstate with reverse airflow;
- Supply and install a new pressure stabiliser damper in wall between the corridor and lobby.

Electrical/Controls Installations

The Contractor will undertake to:

- Supply and install a new centralised alarm panel at the nurse base. This panel will be designed, supplied and installed with capability of alarm connections to the site-wide Schneider Controls, and be open protocol. The panel will be surface-mounted and be of stove enamel white or equal finish. The panel will incorporate a sounder and mute for common alarm condition and green (healthy) and red (alarm) lamps for each room. For each room the panel will monitor terminal HEPA healthy condition, room magnahelic pressure healthy condition (time delay required to allow for open door conditions) and supply AHU and extract fan healthy condition. The panel will interface with the existing Building Management System (BMS) for receipt of information on the plant status and relay of information for the room status. The panel supplier will allow for graphics and software update at the head end to accommodate the alterations. All interfaces must be open protocol;
- Supply and install a new magnahelic gauge mounted on the corridor wall outside each room with a -30/0/30Pa scale. The gauge will offer visual indication of the room pressure (+20Pa design) via a dial face or digital readout and a tell tale interface with the alarm/monitoring system for room low pressure;
- Supply and install an individual sounder and mute alarm on the corridor wall of each room to provide a local individual room-specific alarm;

- Supply and install all necessary impulse tube, cable, containment, field mounted equipment and power supply from local distribution as required to provide a fully operational installation.

Test & Commission

The Contractor will undertake to:

- Pressure test the supply and extract ductwork installations to DW/143 medium pressure;
- Clean supply and extract ductwork systems for all bedrooms to TR/19 PDI Level 3;
- Set to work existing supply and extract systems and balance to achieve design airflows as stated on drawing 70520(57)01;
- Dispersed Oil Particulate (DOP) test the HEPA filters;
- Adjust pressure stabiliser blades as required for stability under steady state conditions;
- Function check all alarm interfaces.

Validation and Demonstration

Ventilation Plant and room validation must be carried out as per requirements set out within SHTM 03-01 Ventilation for Healthcare Premises Part A – Design and validation. All air sampling and microbiological sampling will be carried out by NHS ICT and does not form part of this tender. However, clinical deep cleaning does form part of this tender and is critical to the successful air sampling outcome, and must meet the requirements of SHTM 03-01. The room will require to be re-cleaned to clinical standards until the room passes the air quality test protocol.

Operation & Maintenance (O & M) Information

The Contractor must:

- Obtain and modify the existing ventilation installation drawings to reflect the modifications and provide in hard copy, pdf and editable electronic format;
- Provide hard copy and pdf all relevant manufacturers' literature, commissioning results and test certificates;
- Supply all electrical wiring and panel diagrams in hard copy and pdf.

All hard copy information must be provided in hard-backed ring binder folders complete with all Contractor and subcontractor contact details.

Post-installation demonstrations will comprise two half-day sessions. One session will be provided for the clinical staff to inform them on the operation of the rooms from a user perspective. One session will be provided for NHS Estates staff to inform them on the technical operation of the rooms.

Client Liaison

Prior to and throughout the works duration, the Contractor will allow for:

- Contract pre-start meeting and associated preliminaries;
- Daily liaison with the NHS project manager and clinical management team as required;
- Weekly project progress meetings (minuted).

Contractor Design

There is no contractor design.

Drawings & Specifications

There are drawings necessary for the works and tenderers should refer to the *Appendices* within the Quick Quote advert:

Appendix A: Positive Pressure Isolation Schematic;
Appendix B: HAI-SCRIBE;
Appendix C: 'As built' ventilation ductwork layout drawing number ME-ZC-02-PL-524-508.

Services and other things provided by the Employer

N/A.

Pre-construction Health & Safety Information

The Health & Safety file for the buildings maybe seen by appointment with the local Estates Manager.

Site Information

The Royal Hospital for Children is located on the Queen Elizabeth University Hospital (QEUH) site in Glasgow.

Access to the Site

Access to the site is to be agreed with the client prior to works commencing.

Attention is drawn to the fact that storage facilities within the site/existing building will be very limited and the Contractor will require to make arrangements for the delivery of and removal of materials to and from the site in such quantities as are appropriate to the limited storage facilities available or provided.

The Contractor's attention is also drawn to the requirement to limit the amount of materials arising from the downtakings being stored on site.

All existing fire escape doors, corridors & stairs must be kept clear at all times. The Contractor must liaise with the local Estates Manager and the NHS GG&C Fire Officer to maintain the integrity of all fire escape routes.

Parking

Restrictions on parking of the Contractor's and employees' vehicles: parking of the Contractor's and the Contractor's employees' vehicles are permitted within the QEUH site by prior arrangement with the local Estates Manager.

Use of the Site

- General: do not use the site for any purpose other than carrying out the Works;
- Limitations: the site and all other areas of the existing building can be categorised as follows:
  - Areas of the building(s)/site which will be in sole possession of the Contractor during the works;
  - All areas of the building which will remain occupied and in use at all times by NHS GG&C.

The Contractor must only use the lift identified for transport personnel, materials or plant during the currency of the works.

Surrounding Land/Building Uses

- General: Adjacent or nearby uses or activities are as follows:
  - Healthcare provision by NHSGG&C in various buildings;
  - Office and training accommodation for NHSGG&C and University of Glasgow employees and students.

Health & Safety Hazards

General: the nature and condition of the site/building cannot be fully and certainly ascertained before it is opened up. However, the following hazards are or may be present:

- Asbestos – RHC was constructed after 2000 and no Asbestos Containing Materials (AMCs) were used in its construction.

Information: the accuracy and sufficiency of this information is not guaranteed by the Employer or the Employer's representative. The Contractor must ascertain if any additional information is required to ensure the safety of all persons and the Works.

Site staff: the Contractor must draw to the attention of all personnel working on the site the nature of any possible contamination and the need to take appropriate precautionary measures.

Site Visits

Assessment: ascertain the nature of the site, access thereto and all local conditions and restrictions likely to affect the execution of the Works.

Tenderers are recommended to inspect the existing buildings and to fully familiarise themselves with the local conditions, accessibility of the site, means of access and egress for labour, plant & materials, the full extent and character of the operations, the supply and conditions affecting labour, plant and materials and the execution of the contract generally. No additional costs will be permitted on account of any omission or error arising from the lack of knowledge nor will additional costs be allowed for multiple handling of materials within the site or resulting from the means of access to the site.

Inspection of the site is especially recommended in order that the tenderer may assess the risks involved and the protective measures necessary to combat vandalism, theft and all other risks due to the location of the site.

Arrangements for visit:

Site visit to be arranged with; Deputy General Manager (Estates), Ian Powrie [redacted]

Price List

Please see appended within the Quick Quote advertisement.

4. General Contract Information

Throughout the duration of this contract, Estates and Procurement personnel together with appointed external consultant will review aspects of the Works, e.g., invoices, adherence to timescales, quality of work and compliance to these tender documents, etc. Estates personnel will continuously monitor Contractor performance, with support as and when required from Procurement colleagues and external consultant. This will be discussed in greater detail with the successful Contractor once the contract has been awarded.

4.1 Site Meetings

The contract/project manager or suitable Contractor representative must attend review meetings to discuss the contract. Attendance at these meetings is mandatory and is not chargeable. Any additional meetings are liable to be related to poor performance and as such are also not chargeable. It is NHS GG&C's prerogative to call meetings as and when reasonably required, and will not be charged in any form whatsoever for doing so. Attendance at any such meetings is also mandatory.

Contractors will be audited through the framework and contract. Any instances of poor performance not rectified within agreed timescales may result in suspension from the framework with immediate effect.

4.2 Roles and Responsibilities

4.2.1 NHS GG&C Estates Personnel

Estates personnel will be the main points of contact and their details will be provided to the Contractor ahead of the contract starting. Only nominated representatives have the authority to issue instructions under this contract. Contractors will receive a list of points of contact/authorised persons on award of the contract.

Management of the contract will be undertaken between the relevant Estates personnel, NHS GG&C's appointed external consultant and the Contractor.

Estates personnel and/or external consultant will undertake contract management including:

- Monitoring of Contractor's performance;
- Co-ordination and consolidation of management information from the Contractor;
- Chairing and managing site meetings with the Contractor and disseminating outcomes;
- Managing any performance issues and complaints;
- Managing variations and disseminating outcomes.

4.2.2 Contractor

The Contractor will contribute to the contract management process by:

- Delivering/performing contractual obligations arising from the contract;
- Providing the required information in a timely fashion to NHS GG&C;
- Attending all planning, operational, and performance meetings and reporting on same;
- Delivering an effective account management and customer services role to NHS GG&C;
- Ensuring that a system is in place for ensuring quality and managing complaints/problems. This system should function to a high standard and include appropriate staff training;
- Having a complaints procedure that addresses the following: acknowledgement of complaints, resolution/closure of complaints, monitoring and reporting of complaints to NHS GG&C, escalation procedures in place should problems remain unresolved;
- Responding to general queries within the same day;
- Responding to complaints in writing within 5 working days;
- Responding to emergencies on site within 1 hour;
- Achieving 100% invoice accuracy where specification remains unaltered;
- Providing estimated costs of works ahead of them being undertaken and purchase orders raised;
- Compliance with all legislative, statutory and local policies, procedures and rules;
- Achieving a 100% completion rate for written requests for information (RFI)
- Co-operating at all times with NHS GG&C personnel;
- Ensuring at all times (unless in the event of an 'emergency') that a purchase order has been received and cost agreed, prior to invoice;
    - In the event of an 'emergency,' a quotation must be provided within one working day of completion of the works and that the figure is agreed prior to Estates personnel raising a purchase order.
- Ensuring that all paperwork references purchase order numbers.

5. Award Criteria

Contract award will be scored on bidders' Price and Quality, with weights attributed as below.

5.1 Commercial (Section Weighting: 60%)

The appended Price List will be scored for the commercial element.

5.2 Quality (Section Weighting: 40%)

Please provide answers to the following questions:

Q1: Please provide a statement of your understanding and interpretation of the scope of these works and your company's role within. Describe how your company would maintain an overview of the works, including planning, monitoring and quality control, through to completion and any post-works remediation.

Points to consider include dealing with a 24/7 operational site, working collaboratively with NHS GG&C Estates personnel and conflict resolution, etc.

Q2: Please provide your company's plan of work/method statements and standard operating procedures that you would adopt on these works, and include any additional processes and/or procedures that your company would implement in executing these works. Please provide details of your proposed employee/operative structure for these works. Include an organogram showing a management structure including supervisory and support staffing proposed.

Please note that any changes to staff during the contract must be agreed with Estates and Procurement personnel in advance.

Q3: Please provide a programme of works, as per contract data provided in this tender. Tenderers should submit a programme which complies with the requirements of the Contract Data, shows critical path & float highlights key dates for carrying out the various works to specific areas and completion.

Q4: Please provide details of how your company would limit damages on site and negate the risk of damages occurring. Please also detail your reporting lines and methods to make good any damages and/or remediation.

Q5: Please demonstrate your organisation's approach to delivering community benefits or achieving social value through these works; e.g., by providing training opportunities, apprenticeships or investment (monetary or otherwise) in the local community.

Award Criteria Tables

Commercial (60% of available marks)

Quality (40% of available marks)

Question No.	Weighting (%)
1	30
2	30
3	20
4	20
5	0

6. Scoring Methodology

Each response requiring a score will be awarded a mark from zero (0) to five (5)

A mark of zero (0) will be awarded for a response that:

- does not meet any aspects of the requirement
- does not demonstrate any understanding of the requirement
- demonstrates a poor quality service
- does not provide any evidence of ability to meet the service offered

A mark of one (1) will be awarded for a response that:

- meets few aspects of the requirement
- demonstrates a reasonable understanding of the requirement
- demonstrates a reasonable quality service
- provides little evidence of ability to meet the service offered

A mark of two (2) will be awarded for a response that:

- meets some aspects of the requirement
- demonstrates some understanding of the requirement
- demonstrates a reasonable quality service
- provides some evidence of ability to meet the service offered

A mark of three (3) will be awarded for a response that:

- meets most aspects of the requirement
- demonstrates a good understanding of the requirement
- demonstrates a good quality service
- provides adequate and complete evidence of ability to meet the service offered

A mark of four (4) will be awarded for a response that:

- meets most aspects of the requirement
- is comprehensive, unambiguous, and demonstrates a good understanding of the requirement
- demonstrates a high quality service
- provides adequate and complete evidence of ability to meet the service offered

A mark of five (5) will be awarded for a response that:

- meets all aspects of the requirement
- is comprehensive, unambiguous, and demonstrates an excellent understanding of the requirement
- demonstrates an excellent quality service
- provides adequate and complete evidence of ability to meet the service offered

Half marks may be awarded at the discretion of the individual scorer where responses are deemed to not quite meet the full requirements of the higher score, but have demonstrated a higher level than the lower score.

The following formula will then be applied:
(Mark awarded/Marks Available) x Award Criteria

When scoring the Commercial element, the following formula will be used:
(Most competitive Price/Bidder Price) x Award Criteria Weighting.

Please note that full marks will be awarded in the Commercial category for the most competitive bidder, whose tender return price will be used as the benchmark for others to be compared against.

Your most competitive prices must be input to the Price List in the highlighted cells and in the same order as stated on the Price List. Any change of order or omissions will result in a tender being deemed incomplete and in turn being withdrawn.

Request for Information - Section 21 Notice - No 18 (Ventilation Systems)

5. Isolation rooms:
In respect of all isolation rooms in the QEUH, please provide a schedule of all isolation rooms with the following information:

a) **Where the room is situated**
b) **What patient group was intended to be accommodated in the room at handover**
c) **Following handover, what changes were made to the ventilation systems in the room**
d) **A description of the patient groups who are using the rooms now.**

This response will address items a) and c) for the RHC. Responses in relation to isolation rooms in the QEUH and in relation to items b) and d) are provided separately.

This response should be read in conjunction with RFI S21 No 10 submissions provided in December 2022/January 2023. Information previously provided may not been duplicated in the response below.

The following acronyms are used within this document:
PPVL refers to Positively Pressured Ventilated Lobby
NPVL refers to Negatively Pressure Ventilated Lobby
PPIR refers to Positively Pressured Isolation Room
NPIR refers to Negatively Pressured Isolation Room

There are 24 isolation rooms in the RHC.

Ward 2A
The table below identifies where the Isolation rooms in Ward 2A on the 2nd floor are situated.

Room Ref	Bed Ref	Isolation Room Current Designation
SCH 009	Bed 22	PPVL
SCH 011	Bed 23	NPVL
SCH 018	Bed 24	PPVL
SCH 019	Bed 25	PPVL
SCH-067	Bed 18	PPIR
SCH 072	Bed 19	PPIR
SCH 074	Bed 20	PPIR
SCH 066	Bed 17	PPIR

In ward 2A there are 8 isolation rooms. At handover, these rooms were all designed as PPVL rooms. In June 2015, and prior to patients being placed in the rooms, HEPA filtration was installed in the supply grilles located in the lobbies. This was a physical change to the ventilation system as this took place after handover.

Between January and March of 2018, 4 isolation rooms in ward 2A were converted from PPVL to PPIR. These rooms were identified as SCH-067 Bed 18, SCH-072 Bed 19, SCH-074 Bed 20 and SCH-066 Bed 17.

In the original configuration the extract grille was located in the patient room and the supply grille located in the lobby. Following reconfiguration, the supply grille is in the patient room and the extract grille is relocated from the room to the corridor outside the lobby. The extract in the en-suite was not altered. New pressure relief dampers were installed to allow air to flow from patient room to lobby to corridor. On completion of these works, the rooms were validated.

From 2019 the Ward 2A refurbishment programme[1] included the replacement of all 8 AHUs which served the isolation rooms. One of the remaining four PPVL rooms, SCH 011 Bed 23, was converted to a NPVL which involved relocating the extract grille from the patient room to the lobby and installing 2 HEPA filtered supply grilles within the patient room.

Ward 2A isolation rooms now consist of 3 PPVL, 1 NPVL and 4 PPIR as identified in the table above.

RHC Isolation rooms out-with Ward 2A

We have no record of HEPA filters having been installed in the remaining 16 PPVL rooms within RHC when the hospital was handed over. Where a HEPA filter has been fitted in an isolation room since handover, this is a physical change to the system. This response is based on the earliest dated verification reports which evidence the presence of a HEPA filter test in an isolation room lobby.

Clinical Decision Unit
The table below identifies where the Isolation Rooms within the Clinical Decision Unit (CDU) on the ground floor are situated.

Room Ref	Bed Ref	Isolation Room Current Designation
OBW 050	Bed 17	PPVL
OBW-051	Bed 18	NPIR

In CDU there are two isolations rooms, at handover both rooms were PPVL.

[1] Read in conjunction with response to Q1 RHC Ward 2A and 2B

The verification report for OBW 050 records that in August 2021 a terminal HEPA filter is present in the lobby. There have been no further changes to this ventilation system.

The verification report for OBW 051 records that a terminal HEPA filter was present in the lobby supply grille in September 2018 while the room was operating as a PPVL. In May 2019 OBW 051 was converted from a PPVL to a Negative Pressure Isolation Rooms (NPIR) at the request of Consultant Physicians and Infection Control Doctors (ICDs). The ventilation system changes were the installation of a supply grille in the patient room and an extract grille in the lobby. These were additional to the existing grilles. The system was then re-balanced to ensure the flow of air is always from the corridor or lobby to the patient room. Within the plant rooms, gas tight dampers were fitted to both supply and extract ductwork allowing them to be sealed for disinfection if required.

Cardiology Ward

The table below identifies where the Isolation rooms within the Cardiology Ward (CAR) on the first floor are situated.

Room Ref	Bed Ref	Ward No	Isolation Room Current Designation
CAR 016	Bed 13	1E	PPVL
CAR 011	Bed 14	1E	PPVL

In CAR there are two isolations rooms which are and have been PPVL rooms since handover.

The verification report for CAR 016 records that in September 2018 a terminal HEPA filter was present in the lobby supply grille. There have been no further changes to this ventilation system.

The verification report for CAR 011 records that in September 2018 a terminal HEPA filter was present in the lobby supply grille. There have been no further changes to this ventilation system.

Paediatric Intensive Care Unit

The table below identifies where the Isolation rooms within the Paediatric Intensive Care Unit (PICU) on the first floor are situated.

Room Ref	Bed Ref	Ward No	Isolation Room Current Designation
CCW	Bed 12	1D	PPVL
CCW	Bed 17	1D	PPVL
CCW	Bed 18	1D	PPVL
CCW	Bed 5	1D	NPIR

In PICU, all four isolations rooms were PPVL at handover. One was subsequently changed.

The verification report for CCW Bed 12 records that a terminal HEPA filter was not present in the lobby supply grille until July 2020. There have been no further changes to this ventilation system.

The verification report for CCW Bed 17 records that a terminal HEPA filter was not present in the lobby supply grille until November 2020. There have been no further changes to this ventilation system.

The verification report for CCW Bed 18 records that a terminal HEPA filter was not present in the lobby supply grille until June 2020. There have been no further changes to this ventilation system.

The verification report for CCW Bed 5 records that a terminal HEPA filter was not present in the lobby supply grille prior to the room being converted from PPVL to NPIR in May 2019. The room was converted at the request of Consultant Physicians and ICDs. The ventilation system changes were the installation of a supply grille in the patient room and an extract grille in the lobby. These were additional to the existing grilles. The system was then re-balanced to ensure the flow of air is always from the corridor or lobby to the patient room. Within the plant rooms, gas tight dampers were fitted to both supply and extract ductwork allowing them to be sealed for disinfection if required.

Acute Receiving Ward

The table below identifies where the Isolation rooms within the Acute Receiving Ward (ARU) on the second floor are situated.

Room Ref	Bed Ref	Ward No	Isolation Room Current Designation
ARU 108	Bed 5	2C	PPVL
ARU 109	Bed 6	2C	NPIR

In ARU there are two isolations rooms which at handover were PPVL rooms. One was subsequently changed.

The verification report for ARU 108 records that a terminal HEPA filter was not present in the lobby supply grille until May 2022. There have been no further changes to this ventilation system.

The verification report for ARU 109 reports that in September 2018 a terminal HEPA filter was present in the lobby supply grille. In May 2019 ARU 109 was converted from a PPVL to a NPIR at the request of Consultant Physicians and ICD's. The ventilation system changes were the installation of a supply grille in the patient room and an extract grille in the lobby. These were additional to the existing grilles. The system was then re-balanced to ensure the flow of air is always from the corridor or lobby to the patient room. Within the plant rooms, gas tight dampers were fitted to both supply and extract ductwork allowing them to be sealed for disinfection if required.

Level 3

There are six isolations rooms located on the third floor which are PPVL and have been since handover.

The table below indicates where the Isolation rooms within Level 3 are situated.

Room Ref	Bed Ref	Ward No	Isolation Room Current Designation
GW3 053	Bed 16	3A	PPVL
GW3 054	Bed 15	3A	PPVL
GW2 022	Bed 19	3B	PPVL
GW1 055	Bed 9	3C	PPVL
GW3 058	Bed 10	3C	PPVL
GW2 055	Bed 5	3C	PPVL

The verification report for GW3 053 records that a terminal HEPA filter was not present in the lobby supply grille until April 2022. There have been no further changes to this ventilation system.

The verification report for GW3 054 records that in September 2018 a terminal HEPA filter was present in the lobby supply grille. There have been no further changes to this ventilation system.

The verification reports for GW2 022 records that a terminal HEPA filter was not present in the lobby supply grille until April 2020. There have been no further changes to this ventilation system.

The verification report for GW1 055 records that in October 2018 a terminal HEPA filter was present in the lobby supply grille. There have been no further changes to this ventilation system.

The verification report for GW3 058 records that in March 2019 a terminal HEPA filter was present in the lobby supply grille. There have been no further changes to this ventilation system.

The verification report for GW2 055 records that a terminal HEPA filter was not present in the lobby supply grille until July 2020. There have been no further changes to this ventilation system.

RFI (Request for Information) 10. Section 1. Wards 2A/2B RHC: In respect of all perceived problems, defects and issues with the ventilation system within Wards 2A/2B of the RHC, following building handover in January 2015 to present date.

This response is presented as a chronology and identifying documents to answer to the various sections of 1.1 to 1.7 against each of the work programmes we have identified as "remedial and/or refurbishment works". We have not included activities which we considered to be a change or enhancement of planned preventative maintenance.

The response to RFI 7 4.1 is relevant and should be read in conjunction with the responses noted below. The RFI 7 4.1 response provides background to the decisions taken to proceed with works and we have not duplicated information previously provided.

2015/6 Completion of works, snagging and defects

In the period between handover in January 2015 and the patient migration into Wards 2A and 2B in June 2015 Multiplex and NHSGGC undertook activities that included installation of terminal HEPA filters to the 8 isolation rooms, replacement and sealing of light fittings. Some of these continued after the patient migration. There was a control fault reported and rectified in October 2015.

Circa 18/20 July 2016 there were reports of discoloured water dripping from vent unit. 4 rooms in 2A (not BMT) were affected. This was a condensation issue due to high humidity and was experienced in various areas across the hospital. An immediate cleaning programme for the rooms was implemented and the planned preventative maintenance of the grilles was reviewed and adjusted.

2017 Refurb work to convert 4 no. Positive Pressure Ventilated Lobby (PPVL) isolation rooms to Positive Pressure Isolation Rooms (PPIR).

At the time of the decision to proceed with Ward 2A works to convert 4 x PPVL isolation rooms to PPIR there was ongoing consideration being given within the Board to the use of "isolation rooms" for either immunosuppressed or infected patients. Subsequently works across both QEUH and RHC were instructed to create Negative Pressure Isolation Rooms.

Filename	Descriptive comment	RFI 10 Ref
BMT Cubicles Minutes 220916.docx	**22nd September 2016** Minute of a meeting Re: BMT Cubicles held in Conference Room 008, Level 3, Royal Hospital for Children, Glasgow at 11:30 a.m.	1.1
Ward 2A BMT Isolation rooms.msg	Email note of meeting on **22 Sept 2016** from Ian Powrie to David Loudon *"SHTM 03-01 guidance should have been used for the Isolation room design to ensure that the patient room was positively pressured. Therefore the preference would be to accommodate these patients in a positive pressure protective environment. This position was agreed by the clinical representatives"*	1.1
QEUH and RHC Isolation Rooms Review Rev1.doc	QEUH and RHC Isolation Room Review Dated **March 2017** (prepared by Hulley and Kirkwood) includes scope to review *"Changing of 4No. PPVL isolation rooms (17, 18, 19 & 20) within Ward 2A to positive pressure isolation rooms for the continued use for transplant and severely immune-compromised patients."* This was a technical feasibility study.	1.1, 1.2
RHC Ward 2a Isolation Rooms Tender.doc	Tender documents DRAFT that was agreed by Teresa Inkster (ICD), Prof Gibson (Consultant Haematologist ward 2A), Jamie Redfern (GM RHC acute), prior to issue	1.1
Specifications - FINAL	**30 May 2017** Tender Document issued on Public Contracts Scotland	1.2, 1.3
NHS Scope of Works - General (NEC3)	**30 May 2017** Tender Document issued on Public Contracts Scotland	1.2, 1.3
Appendix A	**30 May 2017** Tender Document issued on Public Contracts Scotland	1.2, 1.3
Appendix B	**30 May 2017** Tender Document issued on Public Contracts Scotland	1.2, 1.3
Appendix C	**30 May 2017** Tender Document issued on Public Contracts Scotland	1.2, 1.3
NEC3 TSSC Details	**30 May 2017** Tender Document issued on Public Contracts Scotland	1.2, 1.3
NP827-15 Minor Works FA Implementation Guidance Notes 2015-11-04	**30 May 2017** Tender Document issued on Public Contracts Scotland	1.2, 1.3
Price List	**30 May 2017** Tender Document issued on Public Contracts Scotland	1.2, 1.3
PO-GFSG131770.pdf	**3 August 2017** Purchase Order GFSG131770 issued to Morris and Spottiswood. "RHC WARD 2A ISOLATIONSUITES – VENTILATION MODIFICATIONS AS PER TENDER AWARD REPORT" in the sum of £140k ex. VAT.	1.3
2018-01 Ward 2b NHSGGC SBAR Final.pdf	**January 2018** HPS carry out review at GGC Request - HPS provided an SBAR recommending ventilation specification to provide a protective environment for patients isolated within ward 2B. Note – this SBAR	1.6, 1.7

	was received after works were commenced so NOT part of the decision making process to undertake the works. Includes requirements for environmental monitoring for Validation.	
Childrens 2A - Room 19 Isolation Rev 3.pdf	H&V Commissioning Services Ltd Report Childrens Ward 2A – Room 19 (PPIR) Positive Pressure Isolation Room, Critical Ventilation Commissioning and Validation Report Date of Test **14th February 2018**	1.5, 1.6, 1.7
Childrens 2A - Room 20 Isolation Rev 3.pdf	H&V Commissioning Services Ltd Report Childrens Ward 2A – Room 20 (PPIR) Positive Pressure Isolation Room, Critical Ventilation Commissioning and Validation Report Date of Test **14th February 2018**	1.5, 1.6, 1.7
Isolation Room Ventilation Works - RHC Ward 2 Glasgow CONSTRUCTION ISSUE.pdf	Construction Issue of Programme dated **20 Feb 2018** issued by the Contractors Morris and Spottiswood for rooms 17&18 programme (19Feb-20 March)	1.3, 1.4
Childrens 2A - Room 18 Isolation Rev1 14 mar 18.pdf	H&V Commissioning Services Ltd Report Childrens Ward 2A – Room 18 (PPIR) Positive Pressure Isolation Room, Critical Ventilation Commissioning and Validation Report Date of Test **14th March 2018**	1.5, 1.6, 1.7
Childrens 2A - Room 17 Isolation Rev1 14 mar 18.pdf	H&V Commissioning Services Ltd Report Childrens Ward 2A – Room 17 (PPIR) Positive Pressure Isolation Room, Critical Ventilation Commissioning and Validation Report Date of Test **14th March 2018**	1.5, 1.6, 1.7

2018/19 Major refurb works to 2A (work by MPMH) then expanded to include 2B

Filename	**Descriptive comment**	**RFI 10 Ref**
Ward 2A Analysis - Rev 01.pdf	**October 2018** Innovated Design Solution Feasibility Study regarding increasing ventilation air change rates within ward 2A dated 24 October 2018, revised 30/10/18. This report formed the basis of the brief.	1.1
Ward 2B Analysis.pdf	**October 2018** Innovated Design Solutions - Feasibility Study regarding increasing ventilation air change rates within ward 2B dated 15 October 2018. When the significant package of work relating to the BMT section of the ward was instructed mid-contract, much of the advice around doing this was based on this report by WGM.	1.1

2018-10-01 2A Ventilation Findings. - JL Comment Ver Final.doc	**October 2018** "Ventilation System Ward 2 QEUH" report by Jim Leiper. A report commissioned by the Interim Director of Estates to explore and explain issues related to the ventilation system, particularly in ward 2A.	1.1
ATO102_01640541.doc	**9 November 2018** Minutes of Water Review Meeting (Technical) note that significant discussion on Ventilation.	1.1
2018-11-12 2A 2B Ventilation SBAR.pdf	**12 November 2018** A PPFM Directorate SBAR from Ian Powrie to Tom Steele. NHSGGC SBAR dated 12/11/2018. Purpose noted as "Ward 2A/2B Ventilation Review". Recommends implementing a project to re-provide a resilient ward ventilation strategy.	1.1
Draft consultancy Scope of works.doc	**10 December 2018** Lead Consultant Appointment Brief	1.2, 1.3
Ward 2A ventilation Appointment Addendum.pdf	**15 March 2019** Lead Consultant Appointment Addendum	1.2, 1.3
20190621171707438.pdf	**21 June 2019** Change Control Form 1	1.2
Change Control Form v4.doc	**3 July 2019** Change Control Form 2	1.2
Document Issue Sheet M01.pdf	**Tender 12 September 2019** Mechanical Document Issue Sheet – This list the Engineers Mechanical design documents issued as part of the Tender	1.2, 1.3
1215 QEUH Ward 2A Ventilation Upgrade Mechanical Services Specification Rev1.pdf	**Tender 12 September 2019** Tender issue of Ventilation Specification	1.2, 1.3
MPMH FoT & Docs.pdf	**10 October 2019** This is the completed Form of Tender document returned by the successful contractor.	1.3
RHC Ward 2A Room to Corridor pressures and recorded ACRs 7 Nov 2019.pdf	**7 November 2019** Pressure Profile recorded by Correctair Solutions	1.5, 1.6
RHX Ward2A works - CSSL Budget costs 27 Nov 2019.pdf	**27 November 2019** Correctair invoice itemising works in 3 x PPVL rooms	1.3

MEGNT10156 - RHC WARD 2A PPVL 3NR ROOMS.pdf	**28 November 2019** Morris and Spottiswood quote for works to 3 No. PPVL Rooms	1.3
PO-GQEE208540.pdf	Purchase Order to Morris and Spottiswood (matching quote for works to PPVL rooms) issued on **19 December 2019**	1.3
RHC Ward 2A Room to Corridor pressures and recorded ACRs Post PPVL works 29 Nov 2019.pdf	**7 -29 November 2019** Pressure Profile recorded by Correctair Solutions	1.5, 1.6
7M19110803 Pre-Start Meeting Minutes.pdf	**8 November 2019** The contract was confirmed as SBCC SBC/Q/SCOT 2016, Amendment 1 (Feb 18) in pre-start meeting minutes where other key conditions of the contract are recorded. These minutes will be helpful to the SHI in setting the context of instructions in this contract.	1.3
All Architects Instructions provided (123 items)	Instructions, during the **2019 MPMH Contract**, took the form of Architects Instructions (AI's), a formal method of instructing during the contract. There were 123 over the course of the contract. All have been provided, however not all will be related to Vent.	1.2, 1.3
Project Board PM reports (20 no.) Client Progress reports (34 no.) Site Progress Meeting (60 No.)	During the **2019 MPMH Contract** meeting minutes were generated for the regularly convened meetings as well as those called for a particular purpose. The 2A project scope was wider than only ventilation issues, and progress documents provided are not ventilation specific. The following reports that may be considered as reporting progress have been provided: Site Progress Meeting minutes – 60 No. Client Progress reports provided by the contractor for the progress meetings – 34 No. Project Board PM Reports - 20.no.	1.4
Ward 2A Change Control Form 05.doc	**7 July 2020** Change Control Form 5	1.2
Ward 2A BMT AHU Compliance Issues - Rev D.pdf	**11 August 2020** Report by WGM Consulting Engineers "Ward 2A BMT area – General concerns with existing ventilations systems and compliance with SHTM 03-01 rev D (11/8/20)" When the significant package of work relating to the BMT section of the ward was instructed mid-contract, much of the advice around doing this was based on this report by WGM.	1.1
Ward 2A Change Control Form 04.doc	**20 August 2020** Change Control Form 4	1.2
Ward 2A Change Control Form 08.doc	**20 August 2020** Change Control Form 8	1.2
Item 08 - Ward 2a	**3 September 2020** Ward 2A RHC update report given to Corporate Management Team	1.1, 1.4
Derogation form_01.pdf	**7 September 2020** Agreed Derogation 01	1.1, 1.2, 1.6
Derogation form_03.pdf	**7 September 2020** Agreed Derogation 03	1.1, 1.2, 1.6

Derogation form_04.pdf	**7 September 2020** Agreed Derogation 04	1.1, 1.2, 1.6
Item 04 - Paper 20_19 - Ward 2A Update.pdf	**15 September 2020** Paper presented to the Finance Planning and Performance Committee	1.1
Item 18diii - FPPC(M) 20_03 – Final.doc	**15 September 2020** Minutes of the Finance Planning and Performance Committee	1.1
Ward 2A ventilation Change Control Form 17-9-19.pdf	**17 Sept 2019** Change Control Form 3	1.2
Ward 2A Change Control Form 10.doc	**18 Sept 2020** Change Control Form 10	1.2
RHC Ward 2A - Derogation Tracker.pdf	Tracker of agreed derogations and sign-offs, this is provided to demonstrate sign-offs received as all emails collating sign-offs have not be included in the response to the RFI.	1.1, 1.2, 1.6
ExternaltoGGC20210707-259-Ward2A-AE_V-Observations-JM.msg	**8 July 2021** email from Jamie Minhinnick, Authorising Engineer noting observations after site visit.	1.4/1.5
Ward 2A - AE site visit observations.xls	**2 Aug 2021** Excel tracker giving responses to Ventilation Authorising Engineer observations following Site Visit.	1.4
50 files	Phoenix (commissioning engineers) acceptance certificates. 50 files provided. All of these are by the contractor / sub-contractor and provide information considered by the independent validation engineer.	1.5
20220131 NHSGGC Ward 2A Board Report.doc	**31 January 2022** Project Managers report to Project Board on 31 January 2022.	1.4, 1.5, 1.6, 1.7
QEUH - RHC - Ward 2A Validation Report February 2022 - Rev C	**9 February 2022** Validation report provided by Suttons, the appointed Independent Validation Engineers.	1.5, 1.6, 1.7
Validation Report - Signed pages 20.06.22	Validation report provided by Suttons, the appointed Independent Validation Engineers. Signed pages.	1.5, 1.6, 1.7
Risk Assessment 2A2B - Final 250222.doc	**23 February 2022** Final version of Risk Assessment for placement of patients in RHC wards 2A / 2B agreed by wide stakeholder group and circulated on 25 February 2022.	1.7
3C22022201- Practical Completion.pdf	**18 March 2022** Practical Completion certificate issued by Wylie Shanks Architects	1.6

Isolation Room Ventilation Works - RHC Ward 2 Glasgow

construction Programme

Line	Name	Duration	Start	Finish
1	**WORKS TO ROOMS 17 / 18**	**4w**	**19/02/2018**	**16/03/2018**
2	HAI SCIBE works	1d	19/02/2018	19/02/2018
3	delapidation survey	1d	19/02/2018	19/02/2018
4	validation surveys	1d	19/02/2018	19/02/2018
5	Permeability test	1d	19/02/2018	19/02/2018
6	HK site visit to agree required ventilation alteration		21/02/2018	21/02/2018
7	fire alarm isolation and downtakings	1d	20/02/2018	20/02/2018
8	sprinkler isolation and downtakings	1d	20/02/2018	20/02/2018
9	isolate lighting and PIR and remove	1d	20/02/2018	20/02/2018
10	isolation for ventilation	1d	20/02/2018	20/02/2018
11	Cut out/remove ceilings	2d	20/02/2018	21/02/2018
12	ventilation strip out, grills and ducting	2d	21/02/2018	22/02/2018
13	ventilation modification works	4d	23/02/2018	28/02/2018
14	BMS alterations	4d	23/02/2018	28/02/2018
15	reinstate ceiling	3d	28/02/2018	02/03/2018
16	reinstate fire alarm	1d	02/03/2018	02/03/2018
17	reinstae lighting and PIR	1d	02/03/2018	02/03/2018
18	reinstate sprinkler head	1d	02/03/2018	02/03/2018
19	replace HEPA filters	1d	02/03/2018	02/03/2018
20	De-snag ceiling	2d	05/03/2018	06/03/2018
21	De-snag Pressure stabilisers	2d	05/03/2018	06/03/2018
22	Correct floor works/NHS snagging works	2d	05/03/2018	06/03/2018
23	Commission front end BMS (Witness required)	1d	07/03/2018	07/03/2018
24	Balance vent (H&V)(Witness required)	2d	07/03/2018	08/03/2018
25	comissioning	2d	09/03/2018	12/03/2018
26	remove all rubish from site	1d	13/03/2018	13/03/2018
27	remove protection and carry out site clean	2d	13/03/2018	14/03/2018
28	NHS Clean	1d	14/03/2018	14/03/2018
29	NHS Clinical clean	1d	14/03/2018	14/03/2018
30	Remove hoarding	1d	14/03/2018	14/03/2018
31	Permeability test	1d	15/03/2018	15/03/2018
32	Check velocities at bed head	1d	16/03/2018	16/03/2018
33	H&V Final commissioning (Witness required	1d	16/03/2018	16/03/2018
34	walk the area with client representative		16/03/2018	16/03/2018
35	client demonstrations		16/03/2018	16/03/2018
36	O&M mannual		16/03/2018	16/03/2018
37	Removal of site set up	2d	19/03/2018	20/03/2018
38	NHS Microbiology	1w	19/03/2018	23/03/2018

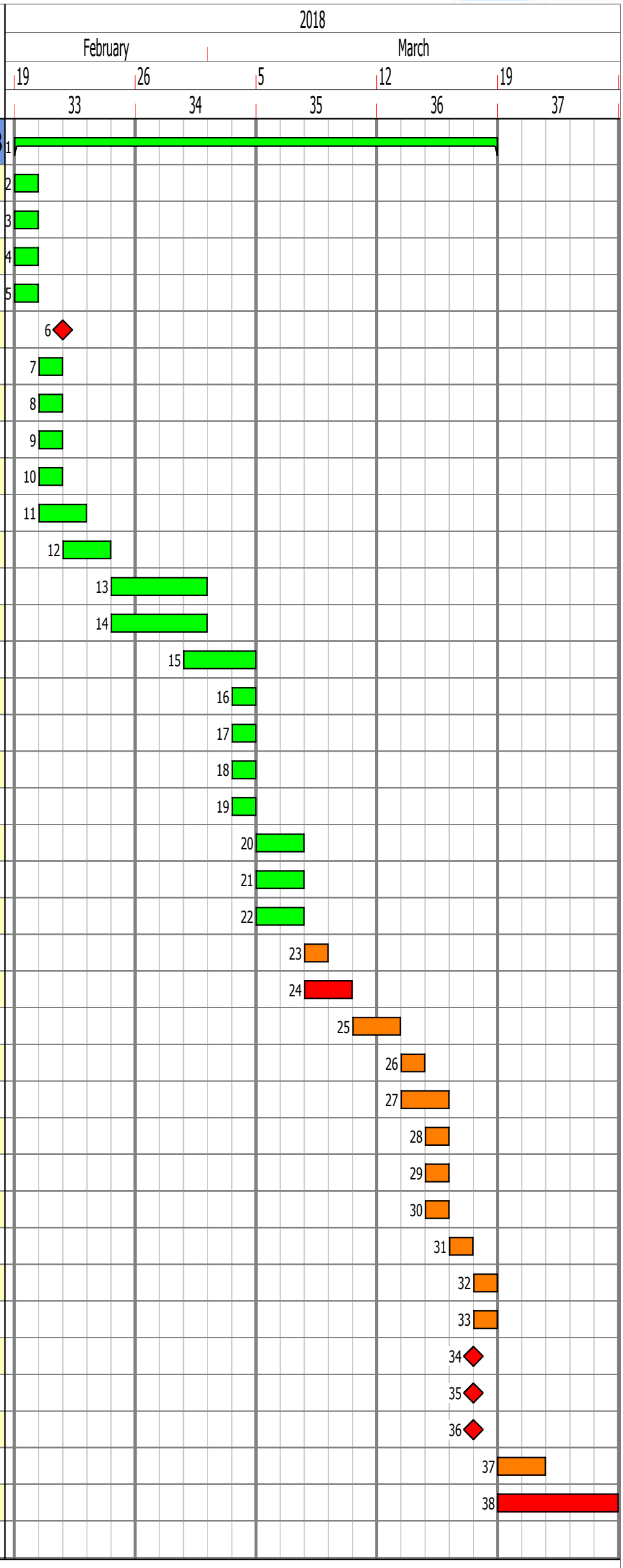

NHS Greater Glasgow & Clyde

O/A Contract Period Milestones / Key Dates Close-out Period

Programme Data		
Number: **MEGSR20248/NHS/GG&C/Glas/PT100**	Revision:	Contract No: **MEGSR20248**
Issue Date:**20/02/2018**	Revision Date: **09/06/2017**	Sheet 1 of 1
File Ref: \\massv113\userredirects$\carmicd\My Documents\workingfiles\myworkspace.morrisandspottiswood.co.uk\MEGSR20248 11-01-2018 Phase 2 draft Programme.pp		

Childrens Ward 2A – Room 17

PPIR (Positively Pressurised Isolation Room)

CRITICAL VENTILATION COMMISSIONING & VALIDATION REPORT

NHS
Greater Glasgow and Clyde

Area:	Ward 2A Children's	**AHU/Room Ref.:**	41AHU33/ Room 17
Client:	Morris & Spottiswood	**Client Contact:**	David Carmichael
Site Address:	1345 Govan Rd, Glasgow. G51 4TF	**Report No:**	A11513
		Date of Test:	14th March 2018
Test Engineer & Report Preparation:	Ian McKenzie	**Signature:**	[redacted]
H&V Approval:	Ian Stewart	**Signature:**	[redacted]
Client Reviewed by:		**Signature:**	

Table of Contents

1. Scope of Works
2. Executive Summary/Observations
3. Supply & Extract Fan Test Sheet
4. Supply & Extract Airflow Volumes
5. Supply & Extract Airflow Rates & Air Change Rates
6. Room Pressure Differentials, Temperature & Noise Levels
7. HEPA Filter Integrity Test.
8. Schematic Layout of Isolation - Room 17
9. Test Equipment Used
10. Calibration Certificates

Section 1.0 – Scope of Works

Commission & Validate Room 17 new Isolation PPIR (Positively Pressurised Isolation Room) within the Children's ward 2A at the QEUH.

To commission and validate the operation of the afore mentioned rooms critical path ventilation systems in accordance with - *Scottish Health Planning Note 04 In-patient Accommodation & SHTM03-01 (Neutropenic patient ward)

**Options for Choice Supplement 1: Isolation Facilities in Acute Settings*

Section 2. Executive Summary/Observations:

Final commissioned detail relayed to Schneider controls both supply and extract set to operate in automatic condition.

Nurses Panel alarms set as follows:

- Room loss of pressure alarm set at 120sec delay 15Pa low level 30Pa high level
- HEPA filter dirty set at 125Pa low level 90Pa

The following criteria is not achieved as per SHPN 04-01

1. Control of Isolation Room AHU supply with HEPA filter fitted – set up with Schneider controls engineer.
2. All sinks and flush units (En-suite WC) to be non-touch flush and wash basins to have single tap with flow and temperature control.
3. Noise level recorded at 39db(A) target NR30 or 35db(A) – noise levels recorded in a fully operational ward – background noise was a factor in recording the room levels.

Section 3 Supply & Extract Fan Test Sheet

CONTRACT: RHC - WARD 2A ISOLATION ROOMS

SYSTEM: 41 - 33/EF01 2ND FLOOR ISOLATION ROOM 17

DIRECT DRIVE FAN TEST SHEET

FAN DETAILS								
AHU Manufacturer	Not Applicable				**Fan/AHU Serial No.**	1039711-00016		
Fan Manufacturer	Dynair				**Fan/AHU Model No.**	AL255/4T055KG		
Fan Type	Centrifugal				**Fan Size**	225/4		
Air Volume		**External Static Pressure (Pa)**			**Pre Filter Test Data (Pa)**		**Sec Filter Test Data (Pa)**	
Design (m^3/s)	0.144	**Design**	**Inlet**	246	**Inlet**	N/A	**Inlet**	N/A
Test (m^3/s)	0.144	305	**Outlet**	28	**Outlet**	N/A	**Outlet**	N/A
% of Design	100%		**Total**	274	**ΔP**	N/A	**ΔP**	N/A
Fan Rotational Speed (rpm)			**Design Data**		1400	**Test Data**		840
MOTOR DETAILS								
Motor Manufacturer	Cantoni					**Output (kW)**		0.55
Motor Serial No.	12436010					**Motor Full Load Current (amps)**		1.90
Voltage	400					**Motor Running Current (amps)**		0.9
Motor Rotational Speed (rpm)			**Design Data**		1400	**Test Data**		840
DRIVE DETAILS								
VSD	Yes				**Set Point**	30Hz		
NO STANDBY PLANT								

Remarks:

Engineer: Ian McKenzie **Date:** 14/03/2018

Section 3: ***Cont...***

CONTRACT: RHC - WARD 2A ISOLATION ROOMS

SYSTEM: 41AHU33 SUPPLY 2ND FLOOR ISOLATION ROOM 17

DIRECT DRIVE AHU TEST SHEET

AHU DETAILS								
AHU Manufacturer		Barkell			**Fan/AHU Serial No.**		0200B36903	
Fan Manufacturer		Flakt Woods			**Fan/AHU Model No.**		GPEB-1-00-022-08-0	
Fan Type		Plug In			**Fan Size**		No Detail	
Air Volume		**External Static Pressure (Pa)**			**Pre Filter Test Data (Pa)**		**Sec Filter Test Data (Pa)**	
Design (m³/s)	0.207	**Design**	**Inlet**	45	**Inlet**	*	**Inlet**	*
Test (m³/s)	0.207	860	**Outlet**	500	**Outlet**	*	**Outlet**	*
% of Design	100%		**Total**	545	**ΔP**	*45	**ΔP**	*
Fan Rotational Speed (rpm)			**Design Data**		2840		**Test Data**	2584
MOTOR DETAILS								
Motor Manufacturer		Flakt Woods					**Output (kW)**	0.75
Motor Serial No.		130426007					**Motor Full Load Current (amps)**	1.78
Voltage		400					**Motor Running Current (amps)**	1.0
Motor Rotational Speed (rpm)			**Design Data**		2840		**Test Data**	2584
DRIVE DETAILS								
VSD		Yes			**Set Point**		73Hz	
NO STANDBY PLANT								

Remarks:

*Filter static pressures taken from Magnehelic Gauges.

Controls static pressure 93Pa.

Engineer: Ian McKenzie	**Date:** 14/03/2018

Section 4. Supply & Extract Airflow Volumes.

CONTRACT: WARD 2A PPIR

SYSTEM: ISOLATION ROOM 17 SUPPLY & EXTRACT - 41AHU33

GRILLE TEST SHEET

Design Data		Initial Test Data		Final Test & Regulation Data		
Terminal or Reference No.	**Design Air Volume**	**Balometer Initial Air Volume**	**Balometer Final Air Volume**	**K Factor**	**Balometer Final Air Volume**	**% of Design**
	l/s	l/s	l/s		l/s	
SG Room 17	207	296.00	207.00	1.0	207.00	N/A
Corridor Extract	100.00	212.00	102.00	1.0	102.00	N/A
En-suite Extract RM 17	45.00	49.00	42.00	1.0	42.00	N/A

Remarks: N/A - Not Applicable. Supply and extract grilles volumes set to achieve Neutropenic room compliance in accordance with SHTM03-01 Part A (Feb 2014)

Volumes design set at required value as per note above.

Engineer: Ian McKenzie	**Date:** **14/03/2018**

Section 5.0 – Supply & Extract Airflow Rates & Air Change Rates

Isolation Room 17 – AHU Ref.: 41AHU33					
Room Reference	**Design Volume m^3/Hr**	**Recorded Air Volume m^3/Hr**	**Room Volume m^3**	**Recorded AC/HR**	**SHTM ACRs (AC/HR)**
Bedroom (Supply)	***745**	**745**	**41.68**	**17.87**	**10**
Toilet (Extract)	**151**	**151**	**14.49**	**10.42**	**10**
Corridor (Extract)	**360**	**367**	**N/A**	**N/A**	**N/A**
Comments: *Room supply air volume to be set to achieve a minimum of 10ac/hr and a door barrier pressure of 10Pa.					

Section 6.0 – Room Pressure Differentials, Temperature & Noise Levels

Isolation Room 17 – AHU Ref.: 41AHU33			
Room Reference	**Target Room Pressure (Pa)**	**Recorded Room Pressures (Pa)**	**Digital Gauge pre reading (Pa)**
Bedroom to Lobby	**10Pa to 12Pa**	**10Pa**	**N/A**
Lobby to Corridor	**N/A**	**7.8Pa**	**N/A**
Bedroom to Toilet	**-ve**	**3.2Pa**	**N/A**
Room to Corridor	**>10Pa**	**17.8Pa**	**17.4Pa**

Isolation Room 17 – AHU Ref.: 41AHU33				
Room Reference	**Door TAG Ref.:**	**Temperature**	**Noise db(A)**	**Noise Target db(A)**
Bedroom	**SCH-064(Lobby)**	**22.4**	**39.0**	**35**

Section 7.0 - HEPA Filter Integrity Tests

This test is performed to confirm that the final high efficiency air filter system is properly installed by verifying the absence of bypass leakage in the installation, and that the filters are free of defects (small holes and other damages in the filter medium and frame seal) and leaks (bypass leaks in the filter frame and gasket seal, leaks in the filter bank framework).

These tests do not check the efficiency of the system. The tests are performed by introducing an aerosol challenge upstream of the filters and scanning downstream of the filters and support frame or sampling in a downstream duct.

The System will be checked to ensure that only HEPA filtered outlets are supplied to avoid excess smoke contamination of the area. Ondina EL test Aerosol will be thermally generated, using a smoke generator, and injected at an appropriate point for testing requirements. Homogenous dispersal of the challenge within the airstream, upstream of the filter, is required. This uniform challenge concentration is to be between 10mg/m^3 to 100mg/m^3 and be across the high efficiency filter and sealing frame.

Provided the System only serves HEPA filtered outlets, the preferred injection point will always be at the air handling unit fan downstream of any filtration in the plant. Where this is not feasible one or more pre-filters will be removed to ensure an adequate challenge and aerosol introduced on the suction/return-air side of the fan. If the filters are removed the AHU volume will be rechecked to ensure that it is at design.

Scan each filter cell by holding the photometer probe approximately 3cm from the downstream filter face or the frame structure and passing the probe in slightly overlapping strokes, at a traverse rate in line with BS EN ISO 14644-3:2005 B.6.2.5, so the entire downstream face is sampled. Make separate passes with the photometer probe around the entire periphery of the filter, along the bond between the filter medium and the frame and along all other joints in the installation through which leakage might bypass the filter medium, including the grid structure.

Challenge aerosol penetration through the filter will be regarded as acceptable if a maximum percentage leak is less than 0.01% in accordance with BS EN ISO 14644-3:2005 for H13 and H14 grade filters. Any excursions from criteria stated above should be subject to investigation and or filter replacement.

7.0 - HEPA Filter Integrity Test Continued…..

HEPA FILTER INTEGRITY TEST			
Test instrument used:	Photometer	**Calibration Date:**	January 2018
Serial Number:	392651	**Calibration Due:**	January 2019
Area:	2A Room 17	**Date of Test:**	14th March 2018
AHU/Fan No:	41AHU33	**Challenge:**	ONDINA EL

Location	HEPA Filter Ref.	HEPA Filter Serial Number	Upstream Challenge (10-100mg/m³)	Penetration Reading (%)	Results (Pass/Fail)
Isolation Room	Bedroom Grille	Certificate Held by NHS (S/N: TBC)	12mg/m³	0.0014%	Pass

Comments: New H14 HEPA Filter Fitted

Acceptance Criteria:

Test Method: BS EN ISO 14644-3:2005 - BS PD 6609:2007 'Insitu Aerosol testing of HEPA Filter'
(Maximum Allowable Penetration = <0.01%)

Engineer (Print):	Ian McKenzie
Signature:	[redacted]
Date:	14th March 2018

Section 8.0 - Schematic Layout of Isolation Room 17

Level: 2

Ward: Children's 2A

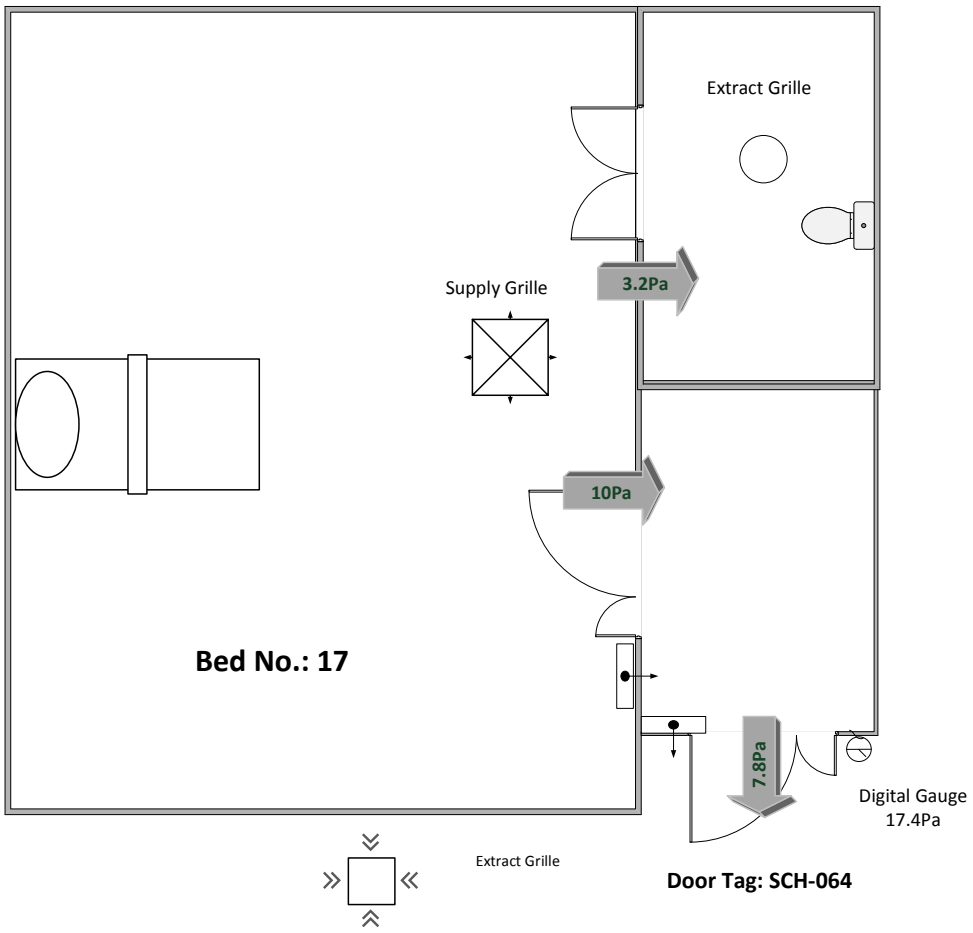

Section 9.0 - Test Equipment Used

Type of Equipment	Serial No	Cal Due Date
Micromanometer	PVM620909005	September 2018
Environmental Meter	160506299	September 2018
Photometer	392651	January 2019
Balometer	90526046	September 2018

Section 10.0 - Calibration Certificates

S&M ELECTRONICS
The Authority in HEPA support

S & M Electronics Ltd.
105, Eastcote Road, Pinner,
Middlesex HA5 IET U.K.
Tel : (020) 8429 1222
Fax : (020) 8248 4313
info@sandmelectronics.com

AEROSOL PHOTOMETER CERTIFICATE OF CALIBRATION

Certificate No:	15233	Test Date:	26th January 2018
Manufacturer:	DOP Solutions	Model:	SP200DNS
Serial No :	392651	Test Due :	26th January 2019
Customer :	H & V Commissioning Services Ltd Kilknowe Office, 16 Barrmill Road, Galston, KA4 8HH.	Contact :	Ms. Angela Daly.

This instrument has been tested & Calibrated in accordance with the manufacturer's specification against our Aerosol Test Rig & Certified to meet all current U.S.A. & U.K. requirements for filter testing. This includes the following: CS-1T,2T,6T; ANSI 101 & 150; NSF 49,ASTM D-1899; IEST-RP-CC-013-86-T, IEST-RP-CC-002.2, IEST-RP-CC-034.1,EN 12469:2000, ISO 14644-3 and British Standard BS5295 and BS EN 1822.

The Aerosol Test Rig is calibrated annually when the actual mass concentration is measured by collecting and weighing the particulate, using Sartorius Scale Model 1712 s/n 3308 087 which has been certified by Sartorius Limited, UKAS Certificate No: JH1085 to meet British Standard using weights traceable to NPL standard. **Shell Ondina Oil** is used for calibration of Aerosol Photometer.

Expanded Uncertainty of Measurement: ± 4.9%

Stated uncertainty based on a temperature, humidity and pressure within 18-25 ^{o} C, 35 to 70% RH and 960 to 1045 mbar.

Reported expanded uncertainty is based on a standard uncertainty multiplied by a coverage factor of k=2, providing a level of confidence of approximately 95%.

Calibration Completed by ..... [redacted] ..... Mr.A.Patel (Engineer).

S & M Electronics Ltd.
105, Eastcote Road, Pinner,
Middlesex HA5 1ET U.K.
Tel : (020) 8429 1222
Fax : (020) 8248 4313
info@sandmelectronics.com

The Authority in HEPA support

SERVICE REPORT

Manufacture: *DOP*
Serial No : *392651* Contract : No
Model No : *SP200DNS* Site : No

Service Report No : *15233*
Date Reported : *25-Jan-2018*
Warranty : NO

Company : H & V Commissioning Services **Contact :** Ian Stewart
Address : Kilknowe Office, **Purchase Order** Angela Daly
16 Barrmill Road,
Galston, KA4 8HH.

Customer Complaint : *Yearly service & calibration.*

Material Used.

Qty :	Part No :	Description	Price:
1		*RECALIBRATED ONDINA*	£0.00
1	776691	*Solvent cleaner*	£0.00
1		*Electrical safety test.*	£0.00
1		*Test results+certificate.*	£0.00

SERVICE DETAILS

1) Inspect Unit for physical damage : Yes
2) Disassemble and clean optical chamber : Yes
a) Replaced P.M.T. Tube: No d) Realign : No
b) Replaced Gasket : No c) Repainted: No
3) Check Absolute Reference filter: Yes a)Replaced filter: No
4) Check pump & rebuild: Yes Replaced a) Pump kit: No
b) Wear Plate: No
5) Check Sample select Valve : Yes Replaced a) O'Rings . No
b)Valve body : No
6) Check a) For Leaks in the system: Yes
b) Internal power supplies: Yes
7) Replaced internal silicon rubber tubings : No
8) Check Hand probe : Yes Replaced a)Meter : No
b)Tube : No c) L.E.D. No d) S.S. Screen No
9) Inspect all electrical contact: Yes
10) Calibrate Instrument: Yes 11) Check Linearity : Yes
12) Final Test : Yes

Service Time: hrs. Travelling Time: hrs

Date / hrs :	26-Jan-2018	5.00		Date/hrs:		
Cost :	P & P	£35.00				
Labour:	£430.00	spares:	£0.00	Engineer:	*Atul Patel*	26-Jan-2018 Date.

Total : £465.00 + VAT Customer: 26-Jan-2018 Date.

ISO 9001
REGISTERED FIRM
GB 9331

Website: www.sandmelectronics.com

S&M ELECTRONICS
The Authority in HEPA support

S & M Electronics Ltd.
105, Eastcote Road, Pinner,
Middlesex HA5 1ET U.K.
Tel : (020) 8429 1222
Fax : (020) 8248 4313
info@sandmelectronics.com

AEROSOL PHOTOMETER CALIBRATION REPORT

Customer Name: H & V Commissioning Services. Date: 26-Jan-2018

Model No : SP 200 DNS Serial No : 392651 Our Ref: AFTER/15233

Internal Reference set point Check.	Set Memory	Tolerance
Previous Service:	10.00	Ug/Litre.
Before Calibration:	7.30	10.00% +/-

D.C. Power supplies Volts :	15.00 Volt +	15.00 Volt -	Lamp. +
	15.10	14.89	5.06

Test Point:		Linear Reading:
21		104.2000%
20		50.2000%
19		55.6000%
18		0.2800%
17		0.2300%
16		0.1900%
15		0.1400%
14		0.1000%
13		0.0790%
12		0.0660%
11		0.0500%
10		0.0400%
9		0.0340%
8		0.0260%
7		0.0140%
6		0.0120%
5		0.0095%
4		0.0044%
3		0.0030%
2		0.0015%

Linear Mode Operation:

		H.V :
Span Dial:	5.06	360.00
Zero Dial :	9.64	

Memory Dial: NIL Ondina El
Memory Value: 10.00 ug/Litre.

Air Flow : 33.00 Litre /Min.

This Photometer is Calibrated by: Date: 26-Jan-18

THIS DOCUMENT IS VALID FOR YEAR FROM DATE OF CALIBRATION.

QM S ISO 9001 REGISTERED FIRM GB 9331

AIRFLOW INSTRUMENTS — CERTIFICATE OF CALIBRATION AND TESTING

TSI Instruments Ltd, Stirling Road, Cressex Business Park
High Wycombe Bucks HP12 3ST England
Tel: (Int +44) (UK 0) 1494 459200 Fax: (Int +44) (UK 0) 1494 459700
http://www.airflowinstruments.co.uk

ENVIRONMENT CONDITIONS		
TEMPERATURE	20.7	°C
RELATIVE HUMIDITY	44.96	%RH
BAROMETRIC PRESSURE	985.8	hPa

MODEL	**PVM620**
SERIAL NUMBER	**PVM620909005**

☒ AS LEFT ☒ IN TOLERANCE
☐ AS FOUND ☐ OUT OF TOLERANCE

– CALIBRATION VERIFICATION RESULTS –

DIFFERENTIAL PRESSURE			SYSTEM PRESSURE02-02				*Unit: Pa*
#	STANDARD	MEASURED	ALLOWABLE RANGE	#	STANDARD	MEASURED	ALLOWABLE RANGE
1	−1008.2	−1006.2	−1019.2~−997.2	3	1971.8	1971.3	1951.2~1992.5
2	540.3	539.1	533.9~546.8	4	3487.7	3488.0	3451.9~3523.6

TSI does hereby certify that the above described instrument conforms to the original manufacturer's specification (not applicable to As Found data) and has been calibrated using standards whose accuracies are traceable to members of the European co-operation for Accreditation (EA) (for example: UKAS, SWEDAC, DAkkS) or has been verified with respect to instrumentation whose accuracy is traceable to some member of EA, or is derived from accepted values of physical constants. TSI's calibration system is registered to ISO-9001:2015.

Measurement Variable	System ID	Last Cal.	Cal. Due	Measurement Variable	System ID	Last Cal.	Cal. Due
Pressure	E006187	09-05-17	09-05-18	DC Volts	E006185	09-05-17	09-05-18
Pressure	E006193	09-05-17	09-05-18	Temperature	E006006	05-04-17	05-04-18

[redacted]
CALIBRATED

14 September, 2017
DATE

Doc. ID: CERT_GEN_WCC

CERTIFICATE OF CALIBRATION

Issued By **Cuthbertson Laird Group**
Date of Issue **04 September 2017**
Date Received **31 August 2017**

Certificate Number
HAM18771

Cuthbertson Laird Group
Parkburn Court
Glasgow Road
Hamilton
ML3 0QQ

[redacted]

Approved Signatory
D. Semple

Electronically Signed

Customer : H & V Commisioning
16 Barmill Road
Ayrshire

Galston
KA4 8HH

Instrument -

System ID :	ID23629
Description :	Environment Meter
Manufacturer :	Precision Gold
Model Number :	N09AQ
Serial Number :	160506299
Customer Ref:	
Procedure Version	2491

Environmental Conditions

Temperature :	20°C ± 1°C	Mains Voltage :	240V ± 10V
Relative Humidity :	50%RH ± 15%RH	Mains Frequency	50Hz ± 1Hz

Comments
This Certificate Records The On Receipt Calibration Status Of The Instrument.

Traceability Information

Instrument Description	*Serial Number*	*Certificate Number*	*Cal. Date*	*Cal. Period Weeks*
Pulsar P100B	035219	G002819	14/09/2016	52
Vaisala HMI41 Indicator	S1330009	A22418029-1	29/08/2017	52
Vaisala HMP41/45 Probe	J3215002	A22418029-1.	29/08/2017	52

Calibrated By : **D Semple**

Date of Calibration : **04 September 2017**

This is to certify the above instrument was fully tested and calibrated. Work carried out was in accordance with procedures laid down in BS EN ISO/IEC 17025:2005. The accuracies of the standards used are traceable to National Standards, via UKAS approved laboratories.

CERTIFICATE OF CALIBRATION

Certificate
HAM18771

Test Title	Applied Value	Reading	Uncertainties
Sound Level Meter			
Lo C	94dB	92.8dB	0.6dB
Hi C	94dB	93.5dB	0.6dB
Hi C	104dB	103.3dB	0.6dB
Humidity Meter			
%Rh	47.2%Rh	44.8%Rh	1.6%Rh
Temperature Meter			
°C	21.1°C	21.3°C	0.33°C

End Of Results

CERTIFICATE OF CALIBRATION

Issued By IRC Ltd

Date of Issue 19 September 2017

Certificate Number
224854

Page 1 of 2 Pages

Instrument Repairs & Calibration
7 Howard Court Industrial Estate
East Kilbride, G74 4QZ
Tel: 01355 264120 Fax: 01355 264150
www.instrument-repairs.com

Approved Signatory
[redacted]
Digitally signed by Keith Low
DN: cn=Keith Low, o=IRC Ltd, ou=IRC Ltd, [redacted], c=GB
Date: 2017.09.19 11:21:41 +01'00'

☐ N.Anderson ☐ K.Low ☐ C.Moore ☐ A.Rae

Customer : H&V Commissioning Services Ltd
Kilknowe Offices, 16 Barrmill Road
Galston KA4 8HY

Date Received : 07 September 2017

Instrument -

System ID :	IRC02204	Job Number :	R87915
Description :	Balometer	Ref. Number :	AC-C-06
Manufacturer :	Alnor	Site :	
Model Number :	EBT-721	Location :	
Serial Number :	90526046	Last Certificate Number :	
Procedure Version :	2592	Last Calibration Date :	

Environmental Conditions

Temperature :	23°C +/- 2°C	Mains Voltage :	230V +/- 10V
Relative Humidity :	50% +/- 20%	Mains Frequency :	50Hz +/- 1Hz

Comments

A. All prime parameters found to be within specification.
Results at the time of test carry no long term stability of the instrument.
This certificate records the ON RECEIPT calibration status.
Recalibration period 52 weeks by customer request.

Traceability Information

Instrument description	*Serial number*	*Certificate number*	*Cal. Date*	*Cal. Period*
Mensor CP6000	610020	13027/8/9/30/33	09/11/2015	104

Calibrated By : K Low **Date of Calibration :** 19 September 2017

This is to certify that the above instrument was fully calibrated. Work carried out was in accordance with procedures laid down in BS EN ISO/IEC 17025:2005.
The accuracies of the standards used are traceable to National Standards,via UKAS approved laboratories.
The copyright of this certificate is owned by IRC Ltd and may not be reproduced except with the prior written approval of the issuing laboratory.
The reported expanded uncertainty is based on a standard uncertainty multiplied by a coverage factor k=2 providing a level of confidence of approximately 95%.

CERTIFICATE OF CALIBRATION

Certificate Number
224854

Test Title	Tolerance	Applied Value	Reading	Pass/Fail
Pressure				
Pascals	2.8pa	249.0pa	250.0pa	Pass
	22.9pa	1 992.0pa	1 995pa	Pass
	40.4pa	3 736.0pa	3 737pa	Pass

End of Results

Uncertainties

Pressure TE69	0- 1000mBar +/- 0.01% of reading

Health Protection Scotland

NHS National Services Scotland

Royal Hospital for Children (NHSGGC) Ward 2b	
Situation	NHS Greater Glasgow and Clyde (NHSGGC) requested support from Health Protection Scotland (HPS) relating to environmental/ventilation monitoring in Schiehallion ward, Royal Hospital for Children.
Background	There are currently eight positive pressure ventilated lobby (PPVL) rooms within Schiehallion ward which are predominantly utilised to nurse severely immunocompromised and/or bone marrow transplant (BMT) recipient children. There has been concern raised regarding the suitability of these rooms in terms of protection for this category of patient. In addition there has been a number of patients reported to have fungal infections which may be healthcare related. Currently there is no UK guidance on BMT isolation rooms, and as a result NHSGGC have requested support. General ventilation guidance is contained within SHTM 03-01 (Parts A and B) and SHPN 04-01 Supplement 01. NHSGGC sought support from HPS relating to environmental, ventilation and monitoring requirements for this group of patients. HPS have liaised with Health Facilities Scotland (HFS) to ensure the recommendations provided are technical and clinically focussed. HPS have provided support to NHSGGC relating to the environment and ventilation within the adult BMT unit and the requirements are the same for a paediatric area. All isolation rooms are currently supplied by an individual air handling unit and whilst the main room is at neutral ventilation the lobby is at positive pressure. NHSGGC are undertaking work to convert four of the eight PPVL rooms to isolation rooms utilising the existing plant. This will result in the room becoming positively pressured, with the extract grille in the ensuite. The pressure cascade will be compliant with that of a theatre (in the absence of specific BMT guidance). The room will achieve 10 air changes and the pressure gauge will measure the pressure between the room and the corridor. This work will be undertaken with two rooms being completed at a time. Validation and environmental testing will be undertaken by an external contractor prior to patients being relocated within the refurbished four rooms. Once this has been completed and validation and microbiological monitoring agreed and signed off by facilities, IPCT and management patients will occupy the first two rooms and another two rooms will be converted from PPVL to isolation rooms.

Assessment	The assessment and recommendations broadly follow those made previously in relation to the adult BMT unit within NHSGGC. NHSGGC have confirmed that the rooms meet 10 Pa and 10 air changes per hour (ACPH). The main focus of the immune-compromised patient is to ensure protection is provided from outdoor contamination. This is achieved via HEPA filtration. HEPA filtration The integrity of the HEPA filter requires to be insitu checked with a particulate counters to ensure its efficiency and correct fitting. Ventilation rates: Validation of the entire system should be as detailed in SHTM 03-01 part A and verification of the entire system should be as outlined in SHTM 03-01 part B. The frequency of verification should be at least annually or more frequently if issues arise. The purpose of carrying out extensive commissioning sampling is to support the findings of the validation. Sampling: There are two ways of sampling: • Active air sampling • Passive air sampling Active air sampling involves using the air sampler and monitoring all patient rooms and corridor on the same day and sampling a high volume of air of at least 1 cubic metre of air from each room. There is no requirement for rooms to be empty during sampling as the testing is to identify fungi not bacteria. Passive air sampling involves using settle plates in every room and allowed to remain in situ for a period of approximately 5-6 hours. Settle plates will sample fungal spores relatively inefficiently but can sample over a far longer time than active air samplers and so capture isolated contamination dispersion events that active sampling is likely to miss. The medium used should be selective medium which only allows the growth of fungi. (e.g Sabaraud's with appropriate selective supplements), Sampling should take place in an adjacent unprotected environment simultaneously to those within the rooms. Fungal levels in the outdoor environment (i.e. the challenge to any system of patient protection) will vary over time. A finding of low fungal counts in the protected area may just be the result of a low challenge level (external fungal counts). This sampling strategy allows the determination of a contamination ratio of the protected environment versus unprotected environment. A combined approach of both passive and active air sampling undertaken in parallel utilising media which selects fungi only, using the same medium, is the preferred method for commissioning and monitoring purposes, with both methods being undertaken simultaneously including an external unprotected control sample. Samples taken at weekly intervals for a period of 4-6 weeks at varying times should provide sufficient information on the integrity of the ventilation system with consideration being given to a follow up

	one month later. Thereafter sampling should return to the agreed boards protocol. Microbiological sampling is used as a validation of engineering and engineering controls and should only be done after the engineering parameters have been assured as adequate. Annual validation of engineering is important and must be undertaken. Results: Fungal growth does not require to be specialised. If controls are in place the optimal level should be zero growth. The presence of any fungal spores on active sampling should prompt a review. The following strategy per cubic metre of air sampled is proposed • Zero growth = optimal • Single digit = review room air supply, confirm direction of outward air passage at multiple gaps in the room's integrity, examine room for areas of dampness or fungal growth. Investigate possible errors in sampling technique and resample. Check extract grilles for dust. • Double digits and above = indication of a serious problem. Urgent investigation and clinical consideration of fungal prophylaxis. It is worth noting that a zero result, whilst optimal, does not always assure engineering efficacy as it may be reflective of no circulating fungal spores at the time of testing.
Recommendations	The recommendations relating to ventilation to allow the provision of a protective environment for patients isolated within the isolation rooms of Schiehallion ward are; • The rooms must be positively pressured at 10 Pa. • ALL air entering the room must be via the HEPA filter. • The HEPA filter should as a minimum be E12 (H13) and located within the supply air diffuser. • The rooms must be sealed and no air which has not passed via the HEPA filter should access the room. • A strict protocol which minimises the length of time the door is opened and reduces air entry via an open door is required. • There must be a continuous pressure monitoring system for each room which alarms and gives an early indication of a pressure drop within the room. • Bedroom Air changes of 10 ACPH must be achieved. • The walls and ceilings within the rooms and ensuite must be sealed. • All room services must be sealed. • All service access hatches within the bedrooms/ensuite must be sealed. • Rooms must have achieved satisfactory validation and commissioning parameters. • Both active and passive air sampling should be undertaken in parallel. • Sampling should be undertaken weekly at varying times for a period of 2-4 weeks. • An external adjacent unprotected area should be identified and passive sampling undertaken in parallel with protected (isolation rooms) sampling. This may be being undertaken as part of the Ward 4b monitoring and if undertaken in a timely manner may be the same sample. • The corridor should also be sampled at the same time as the

	isolation room and external environment • Standard sample plates should be used which are selective for fungi and that inhibit bacterial growth • Any fungal colonies identified require to be counted but not speciated. • As the medium used are selective for fungi and not bacteria, the rooms do not require to be vacated during the sampling period. • Passive sampling/settle plates should be left insitu for 4-6 hours approximately ensuring the plates do not dry out. • Active sampling volume should be approx 1,000 litres per room. • The air sampler should be placed on a clean trolley or stand. • The medium for both passive and active sampling should be the same. • Results should be interpreted: - Zero growth = optimal - Single digit = review room air supply, confirm direction of outward air passage at multiple gaps in the room's integrity, examine room for areas of dampness or fungal growth. Investigate possible errors in sampling technique and resample - Double digits and above = indication of a serious problem. Urgent investigation and clinical consideration of fungal prophylaxis. • Annual validation of ventilation should be undertaken in line with the agreed protocol, based on selected components of SHTM 03-01 part B. • Once the commissioning monitoring as outlined above is complete the normal monitoring protocol endorsed by NHSGGC should be resumed. • If the ventilation parameters are compliant with SHTM 03-01, and the IPCT are content that the parameters are acceptable routine microbiological monitoring is at the discretion of the local IPCT and consideration may be given to annual monitoring, post annual validation or on an adhoc basis. HPS are happy to work with NHSGGC to establish an ongoing monitoring protocol.

VENTILATION SYSTEM

Ward 2 QEUH

Official - Sensitive - DRAFT

J. Leiper. B.Eng. (Hons.), C.Eng. MIHEEM,
Project Manager, NHS GG&C
October 2018

INDEX

TITLE	PAGE
1.0 Introduction	**3**
1.1 Terms of Reference	
1.2 Date of Request	
1.3 Purpose of the Report/ Comments	
1.4 Methodology Applied	
2.0 Ward 2 – Description of Ventilation Systems	**3**
2.1 Ward 2	
2.2 Schiehallion	
2.3 The 'Teenage Cancer Trust'	
3.0 Air Change Rates	**4-5**
3.1 Design Proposal	
4.0 Guidance	**6-11**
4.1 General Guidance	
4.2 Applicable Ventilation Guidance	
4.3 The Application of Guidance	
4.4 Weakness of Guidance	
4.5 Recommended Air Flows	
5.0 Risk Issues	**12**
5.1 Cross Infection	
5.2 Condensation – Dew Point	
6.0 Ventilation Design	**13-17**
6.1 Normally Installed	
6.2 The Installed Ventilation System	
6.3 Single Point of Failure	
6.4 Corridor Ventilation	
6.5 Thermal Wheel	
7.0 Handover	**18-19**
7.1 Observations by NHS GGC	
8.0 Conversion from PPVL to Isolation Rooms	**20**
9.0 Commissioning	**21**
10.0 Planned Preventative Maintenance, (PPM), Compliance	**22-23**
Annex 1 - Extract from M&E clarification Log (Final Agreed for Contract)	**24**
Annex 2 - Excerpt from Scottish Health Technical Memorandum 03	**25**
Annex 3 - Excerpts from Scottish Health Planning Note 04	**26-27**
Annex 4 – Summary of Suggested Recommendations	**28-29**

J. Leiper. B.Eng. (Hons.), C.Eng. MIHEEM,
Project Manager, NHS GG&C
October 2018

Official - Sensitive - DRAFT

1.0 Introduction

1.1 Terms of Reference

The writer was commissioned in July 2018 to provide comment on the ventilation system in the QEUH, Ward 2A, by the NHS GGC Interim Director of Facilities.

1.2 Date of Request

The report was initially requested to be provided in August 2018, but this was delayed due to the writer being diverted to another task considered to be higher priority.

1.3 Purpose of the Report/ Comments

This document is intended to explore and explain issues related to the ventilation system, particularly in ward 2A and seeks to inform a further paper being written by Health Protection Scotland / Health Facilities Scotland.

1.4 Methodology Applied

A brief, initial review of several records held by NHS GGC and a subsequent meeting with the Deputy General Manager, (Estates), are used as the basis of the findings below.

The findings are augmented with opinion and comment by the writer for background information and argument, which are intended to provide explanation and assist clarity.

Recommendations are provided as 'suggestions only for consideration' and the final decision on whether to include these or not, is left to others.

2.0 Ward 2 – Description of Ventilation Systems

2.1 Ward 2

Ward 2 is has two distinct sections, Schiehallion, the Paediatric Bone Marrow Transplant, (BMT), Unit and the 'Teenage Cancer Trust', (Oncology).

2.2 Schiehallion

Schiehallion does not have Chilled Beam Units, (CBUs) installed. The air supply for this part of the ward is through dedicated Air Handling Units, (AHUs), for each Isolation Suite. Each AHU incorporates, 'rough' and 'medium' filters, (grade F4 and F7) with a 'Fine' final terminal filter, (Grade H13 HEPA). Each Isolation Suite was actually designed as an 'isolation facility' with a Positive Pressure Ventilated Lobby, (PPVL), as per the guidance provide by SHPN 04-Supplement 1.

2.3 The 'Teenage Cancer Trust'.

The Teenage Cancer Trust, (TCT), has a single central AHU supplying all of the single room accommodation in the ward via CBUs as per the standard, general ward configuration. (The Units identified as CBUs are in fact 'heating/cooling comfort modules' and not CBUs, but since these are routinely referred to as CBUs in the record documentation, this will be the term used in this report.) The Air Handling Unit, (AHU), which is the central air supply system to the CBUs, also has 'rough' and 'medium' filters, (grade F4 and F7), incorporated.

Official Sensitive - DRAFT

J. Leiper. B.Eng. (Hons.), C.Eng. MIHEEM,
Project Manager, NHS GG&C
October 2018

3.0 Air Change Rates

3.1 Design Proposal

The 'ME Clarification Log final agreed for contract_(5)', indicates that in December 2009, (See Annex 1), Brookfield made a design proposal to NHS GG&C to utilise Chilled Beam, (CB), Technology for the ventilation provision to the wards of the hospital with the 'proviso' that, "rooms could also be at slightly negative pressure to corridor."

It is recorded that the Board accepted the design proposal made by Brookfield to install CB technology in ward single rooms, noting its proviso, "Negative pressure to be created in the design solution."

***Comment**: At this stage of the examination, no written media has been observed that would provide firm evidence about whom this was agreed by, on behalf of the Board, or whom any prior consultation may have taken place with. As part of conversations held during this initial investigation however, information was received that, at this stage of the project, items like this would normally have been signed off, on behalf of the Board, by Francis Wrath, the Board's Technical Manager. Items like this would, I understand, normally have been signed off following consultation with the Board's technical advisors, i.e. Wallace Whittle and or Currie & Brown.*

*One might speculate about the accuracy of the comment, ("Providing 6 air changes is energy intensive and not necessary"), made by Brookfield in its proposal, (**see Annex1**), however, one might also have assumed that the Project Director, (or the Technical Manager), would have asked the Board's Technical Advisors and the Infection Control and Clinical representatives on the Project Team to comment on this and provided a 'sign off' on the proposal, given the significant reduction in the ACH rate that was being proposed and the other important implications that would then be reasonably expected to follow from the installation of the CBUs.*

*In addition, the Technical Guidance only relates the 6 ACH to 'General Wards' and 'Single Rooms', (**see Annex 2**), not in Ward Isolation Rooms, Critical Care Areas or Neutropenic Patient Wards.*

There is a sense, that the Board may have accepted this proposal in the belief that Ward Isolation Rooms, Critical Care Areas and Neutropenic Patient Wards did not form part of this proposal, because the Guidance indicates that these areas should have a ventilation rate of 10 ACH or greater.

It is apparent now that the proposal was implemented and applied comprehensively in the hospital's the single rooms, irrespective of the 'higher risk' patient groups being cared for, in particular locations.

The significance of the '8ltrs per person per second', I understand, is with reference to the requirement of the Building Regulations, which is setting general minimum standards for 'fresh air' for people's respiration and not as a standard specifically for hospitals or in relation to a hospital patient facility's isolation protection. If recirculation systems are being used, SHTM 03-01 Part A (page 26), indicates that, 'minimum fresh air supply volume required by the Building (Scotland) Regulations 2004 is currently 20%'. The purpose of general ventilation provision is to provide fresh air and to dilute odours. Even at a 2-3 ACH, arguably, the purpose of the ventilation has been satisfied, but this rate would not satisfy the recommended ACH in the Guidance for Isolation Rooms.

*Conversations during this investigation have indicated that the wards' single rooms were handed over with the rooms being 'Neutral' in pressure to the adjacent corridor and not 'negative' as per the proviso as part of the agreement recorded in the Clarification Log (**see Annex 1**). The recorded 'proviso' however, is so poorly written, (by saying that the rooms '**could** be at slightly negative pressure …', that sufficient 'wriggle room' is afforded to a possible interpretation that would not actually **require** the contractor to deliver it! It would depend therefore on what wording is actually used in the 'contract' for the project. If the same wording was used, the potential for misinterpretation is evident and the lack of clarity on the outcome to be achieved effectively leaves the Board in a position where it would be unlikely to be successful if it challenged what had been delivered.*

If this is considered a crucial element of concern, further investigation will be required to accurately establish the evidence necessary to confirm the statements made above.

J. Leiper. B.Eng. (Hons.), C.Eng. MIHEEM,
Project Manager, NHS GG&C
October 2018

Official Sensitive - DRAFT

SUGGESTED RECOMMENDATIONS (for consideration)

1 The protocols relating to the recording of the elements of Clarification Logs and other similar important project records should be reviewed to ensure they are recorded in sufficient detail to provide a full audit trail. The intention here is to achieve a clear, unambiguous description of what will be delivered; to what extent this will be done and what the expected outcome(s), implications will be. There should be a record of the possible unintended consequences and risks resulting from the decision and where identified, how these will be managed in the future; by whom and who will be responsible for associated project and life cycle costs, which should be quantified or at least estimated.

2 Accountable Officers and next in line managers should assume more accountability for the competence of those reporting to them in decision making roles. Competence will relate, in particular, to experience, expertise, formal qualifications and training of decision makers. The intention here is to ensure, as far as possible, that the person(s) signing off elements of the project, which will affect the specification and provision of important engineering services, particularly when recommendations within extant guidance is likely to be derogated, has the competence to do so.

3 All of the people involved in the proposals, acceptances and agreements, should be named and appointed in writing with a clear record showing extent of their role(s), responsibilities and accountabilities. These appointments should recorded for reference in a central register, which should form part of the important project records. The purpose here is to allow a record that may be scrutinized in the future to inform any subsequent inquiry of the level of responsibility and accountability for the outcomes and consequences of the decisions they have taken or been involved with.

Official - Sensitive - DRAFT

J. Leiper. B.Eng. (Hons.), C.Eng. MIHEEM,
Project Manager, NHS GG&C
October 2018

4.0 Guidance

4.1 General Guidance

There are a range of statutory instruments, regulations, British Standards and other guidance that would relate to, or impact upon, the design, construction, commissioning and operation of a ventilation system. The references to the applicable legislation and guidance are normally referenced within the NHS guidance documents, specific to the various engineering and building systems.

The Scottish Health Technical Memorandum, (SHTM), is the principal item of guidance utilised by the NHS in Scotland.

> ***Comment**: The majority of the SHTMs are closely aligned to the English Health Technical Memoranda, (HTMs), as the HTMs are routinely, (but not exclusively), the 'source documents', from which, the SHTMs are produced. The HTMs are normally altered slightly to reflect different circumstances that are unique to Scotland, e.g. to reflect Scots' Law, Building Standards Regulations, etc.*

4.2 Applicable Ventilation Guidance

The publication dates of the various items of ventilation guidance will inform and help determine the elements that were available to allow a Health Board to cite them in the project contract terms and conditions at the time when the contract was about to be agreed.

> ***Comment:** Health Facilities Scotland, (HFS), Published SHTM 2025,* 'Ventilation in healthcare premises' *in August 2001. The English HTM 2025 was first published in 1994 (and subsequently reprinted in 1998, 2001 etc). HTM 03 replaced the HTM 2025 series in November 2007. At that time, SHTM 2025 indicated that a new edition, 'SHTM 03' was expected to be forthcoming in 2008. In fact, 'SHTM 03-01: Part B' was published in October 2011 and 'SHTM 03-01: Part A' was published in February 2014.*
>
> *The applicable guidance cited in QEUH contract includes HTMs, which are normally 'not applicable in Scotland'. However, given the stated imminence that the SHTM 03 would be published in 2008, it might explain why the HTM 03, (which would likely be closely aligned to SHTM 03, as the expected 'source document'), might be cited for the QEUH contract.*

4.3 The Application of Guidance

The Contractor has a contractual responsibility to apply the guidance documents cited when designing, constructing, commissioning and, (if applicable), operating systems and / or buildings.

> ***Comment**: The fact that the HTMs cited in the QEUH contract were 'not applicable in Scotland', may introduce an anomaly which might lead to difficulties if issues arising are being argued legally. However, one might reasonably expect the practical application of the HTM's technical guidance content and that this would be a 'contractual obligation' on the Contractor.*
>
> *The ambition that a new project should be constructed in compliance with the latest guidance is understandable. The circumstances around this project reflect a common dilemma when citing the guidance to be followed during a project when the guidance is frequently being updated due to improved technology, learned experience, etc. At the time when this contract was being put together, around 2009, the guidance was undergoing significant review and there would have been a desire to include the latest available version. The HTM, in the absence of the SHTM, the publication of which were expected imminently, might have been considered a reasonable substitution.*
>
> *The NHS Technical Memoranda Guidance is written in a manner that allows 'the caring, experienced healthcare professional' to read, interpret and apply it to achieve appropriate, effective, safe systems in the healthcare environment. In many instances, professional judgement is required when interpreting and applying the Guidance. The decisions taken in these circumstances can be coloured by constraints, which will impact significantly on the final design. If, when making decisions about Guidance application, the motivation is to achieve the cheapest possible solution to simplify construction, maximise standardisation and the Contractor's profit, etc. The eventual outcome might be 'recognised' by the Guidance if interpreted in one way, but might not have been the application chosen by 'the caring professional', applying another interpretation, where the motivation would have been to have been the*

Official - Sensitive - DRAFT

best solution for the specific healthcare function, with ease of operation offering best value over the life of the building.
The cumulative effect of the interpretation of Guidance, consistently motivated by the desire to achieve the cheapest, simplest solutions, the simplest construction, etc, through a large project, can be highly significant when it comes to the operational phase of the hospital.
The life cycle costs associated with the operation of poorly designed and installed systems will dwarf the cost of actually getting it 'right' at the beginning, even if the installation is initially slightly more expensive, and therefore it is false economy to do otherwise. This principle, of decisions being taken based on life cycle cost is often lost and frequently overtaken by the, 'on time, under budget' mantra routinely used by Project Directors. The 'on time, under budget' is definitely a healthy project target, but it shouldn't be at the detriment of costing proportionally more over the life cycle of the facility.
The common use of the Guidance as a 'pseudo specification' in project terms and conditions is a common experience. Statements like, 'The contractor shall comply with SHTM ….' are routinely used. The use of Guidance, in this way, allows a latitude of interpretation of the Guidance to those that may not have the best life cycle value healthcare solution as their prime motivator and whom are unlikely to have any future or ongoing responsibility for the safe and efficient operation of the facility. The compliance with Guidance is important but contract terms and conditions should be much better defined to ensure that safest, best life-cycle value healthcare solution is achieved. In addition, prior to arriving at the Preferred Bidder for a project the Contractor is normally amenable to the suggestions / clarifications being made by the Client as the contractor will be readily capable to reflect all of these ambitions in the cost of the project. Often, the timescales given to get this done, normally by staff members that have their normal 'day job' running in parallel are very tight. Consideration should be given to extending this period of the process and also, of utilising the skills of caring professionals already experienced in this exercise, to allow a considered, thoughtful approach and outcome.
At the time when the Preferred Bidder is announced, the Contractor is much less amenable to accommodate changes or suggestions by the Client due to the disruption this causes to their design process, potential for 'contract creep' and resulting cost increases. So, 'getting it right first time', prior to referred Bidder' stage, should be the express ambition of all parties.

SUGGESTED RECOMMENDATIONS (for consideration)
4 The use of Guidance as a 'pseudo specification' should be avoided.
5 Boards need to be much more specific about the outcomes they require.
6 The caring experienced, professional within the Board should be the final, but reasonable arbiter on the interpretation of Guidance, at the very least in the run up to Preferred Bidder stage.
7 Consideration should be given to the formation of a National/Regional/Health Board team of caring professionals with the skill set (achieved through training, experience and expertise) that could be deployed to represent and help Health Boards undertaking major construction projects.
8 Consideration should be given to changing the prime motivator for projects and replacing the 'on time, under budget' ambition with the principal target being to reach a specification to deliver the 'safest, most appropriate, best value' healthcare outcomes, and if possible, to achieve this prior to the Preferred Bidder stage of a project.

4.4 Weakness of Guidance
Paragraph 1.10 of **SHPN 04 Sup 1**, page 4, (**See Annex 3**), specifically excludes the application of the ventilation guidance to Infectious Diseases Units, (IDUs), and also to wards/rooms where 'severely immunocompromised patients are nursed'.

***Comment**: This exclusion highlights one particular weakness of this specific Ventilation Guidance. There is no extant guidance for ventilation systems in IDUs or Wards where severely immunocompromised patients are cared for and this Guidance specifically excludes them. It is therefore, not comprehensive enough to cover all facilities in a modern hospital. This is urgently required and could be informed by the many IDUs that are in operation at present across the country, with the best practice being identified as*

Official - Sensitive - DRAFT

an 'exemplar'. In the absence of specific guidance, the designer is left in a position where he/she, following consultations with Clinicians, Infection Control and other healthcare professionals, will apply his/her experience and expertise; perhaps in the light of other partially applicable guidance that does exist or other similar, efficiently functioning Units elsewhere in the country, (or abroad), to arrive at the most appropriate design solution. The motivation for this should not be the desire for the cheapest option or the easiest construction, but the safest applicable, best value healthcare solution.

SUGGESTED RECOMMENDATIONS (for consideration)

9 The Ventilation Guidance needs to be reviewed and updated to include, perhaps a few best practice exemplar designs for IDUs and Wards where severely immunocompromised patients are cared for.
10 This Guidance should be updated, within the next financial year, by HFS in consultation with the 4 UK home nations Health Services to achieve exemplar designs that could be applied across the UK.

4.5 Recommended Air Flows

(**See Annex 2** - Excerpt from Scottish Health Technical Memorandum 03-01 - Ventilation for healthcare premises Part A – Design and validation, Appendix 1: Recommended air-change rates – TABLE A, Feb 2014).
(**See Annex 3** – Excerpt from Scottish Health Planning Note 04 In-patient Accommodation: Options for Choice Supplement 1: Isolation Facilities in Acute Settings, Sept 2008)
The guidance recommends 6 Air Changes per Hour, (ACH), for General Wards and General Ward's Single Rooms. There are several exceptions to the 'general ward' recommendation of 6 ACH. For certain categories of 'higher risk' patient groups, i.e. those being cared for in Isolation Rooms, Critical Care Areas or Neutropenic Patient Wards, the recommended ACH rate is increased to 10 ACH. Where immunocompromised patients are to be accommodated, such as in transplant units or specialist cancer units, there could be a need for positive pressure isolation rooms.

The ventilation rates being commonly being delivered to rooms in the hospital are in the range of 2.5 – 3 ACH.

***Comment**: Due to the characteristic, limited air flow capacity of the installed CBUs, NHS GG&C, by its acceptance of and agreement with, the Brookfield proposal, therefore, effectively agrees a derogation to the SHTM 03-01 guidance air change rates' recommendations for the hospital wards, and accepts the air flow rate of 40 ltrs/sec into single rooms, which equates to a 2.5 - 3 ACH rate.*
The extent of the Board's agreement to Brookfield's proposal is not explained in any detail or expanded upon. It is easy to read what the text in the Clarification Log says, but one is now left only to speculate about what was actually 'meant' by the text.
There really needs to be a vast improvement in the recording of details in these important and essential project documents to make sure there is no room for misinterpretation.
*Because this item is so poorly 'crafted' in the Clarification Log, the scope and extent of what was intended is unclear and open to interpretation. For example, it isn't clear from the text whether the derogation was intended specifically, to be applied only to rooms that had a recommendation in the Guidance of 6 ACH and **not** to Isolation Rooms, Critical Care Areas and Neutropenic Patient Wards that are clearly recommended as being 10 ACH. For one to arrive at this conclusion from the text in the Clarification Log, you would need to be aware that the Guidance actually does recommend 10 ACH for some higher risk patient groups and that the 6 ACH only applied to 'general ward accommodation', and also, to be able to comprehend the importance of the distinction. One would then need to make the link between that and what was being proposed and then ultimately conclude that the proposal should only apply to general ward single rooms and, in addition, that it couldn't possibly relate to the rooms where the higher risk patient groups would be cared for. This interpretation could have led to a completely different, and perhaps more palatable ventilation solution than what was actually provided. The text in the Clarification Log may have been rather too cryptic and obscure however, to allow an expectation that this conclusion might have been drawn.*
In a similar sense, an interpretation that has led the Contractor to provide a system that only requires 40ltrs/sec air, might also be argued that this is the 'maximum' air supply required and therefore release

Official - Sensitive - DRAFT

the Contractor from the responsibility of supplying the 125% capacity in the design of the ventilation system. The 'Caring Professional' might argue that the 25% spare capacity requirement was separate from the clarification log excerpt given in Annex 1 (below), (which I would wholeheartedly support), but the ambiguity created by the poor recording and the level of interpretation 'gifted' to the Contractor, might offer the Contractor a sufficient defence about why they had chosen to install the current system with its capacity limitations. After all, why would additional capacity be required in the AHU and duct systems if the installed CBUs were already at their 40lts/sec capacity? Whilst one might see through the absurdity of this argument, one might be unable to discount its validity when argued in a legal context.

In addition, as an aside, one must also be careful about the interpretation when the capacity of a system is defined at a certain rate 'with clean filters'. This means that the defined airflow can only be guaranteed when new filter media is just installed. As soon as the system begins to operate, the filter media will begin to lose its efficacy as it gets more and more dirty. This scenario would be normal and quite acceptable if the plant had the capacity to increase airflow to compensate for the pressure drop across the filters, but if the system is already at its full capacity, any significant dirtying of the filter media will directly affect the ability of the system to deliver its design flow rate, resulting in a reduced airflow and in severe cases, possibly affecting the balance of supply and extract systems and hence the differential pressure regimes established to protect patients and or staff.

Whether intentional or not, the poor level of detail and explanation provided in the Clarification Log, allows a wide scope of interpretation of the text and hence the probability of misunderstanding. Unless someone in the Project Team was able to actually identify the potential anomalies with these issues and remain focussed on these particular items and follow them through, it is perhaps predictable that the thread of the possible original intention would get lost, and the provided spare capacity of the system and the air flow, perhaps originally intended only for general ward areas, would then be applied comprehensively as it has been, (and in my opinion, incorrectly), to all single room patient accommodation. There is a sense that these interpretations could be taken from the text in the Clarification Log.

SUGGESTED RECOMMENDATIONS (for consideration)

11 Agreed items should be recorded in a manner that ensures clarity of intent and in such a way that will allow recourse, principally and primarily through informal processes, if the intended recorded outcome falls short of the recorded expectation.

12 The strategic learning outcomes from experience gained from this project should alter procedures for all future projects in order to improve patient safety; governance assurance and the quality of the practical outcomes achieved. The Post Project Evaluation process is helpful but there is little evidence to show that the experiences in one project are being effectively applied to improve the outcomes of subsequent projects. There should therefore be an effective process to ensure an adequate review of PPEs and the subsequent application on future projects.

Historically, (in SHTM 2025), there had been no exact stipulation of ACH rates in general ward areas and the air changes in general wards therefore fluctuated in line with the 'natural ventilation' air currents within the hospital. Opening windows encouraged air flow through internal spaces, but this was generally curtailed in winter time due to windows being closed to avoid dropping internal temperatures. 'Natural Ventilation', as a concept, was encouraged and it was recommended as an ambition rather than installing mechanical ventilation.

Achieving good ACH rates through Natural Ventilation is a fairly complex science, but it can be accomplished by thoughtful design and a deliberate orientation of the building in relation to the prevailing wind direction and using the pressure and temperature variations across a building to create natural air currents.

Natural Ventilation has a distinct energy (and carbon) advantage, as it takes no prime energy source to generate it.

J. Leiper. B.Eng. (Hons.), C.Eng. MIHEEM,
Project Manager, NHS GG&C
October 2018

Official - Sensitive - DRAFT

It may have been in this context, that the 'Brookfield proposal' (highlighted in Annex 1) might have been made and accepted. Indeed, the focus of the text appears more attention is given to the achievement of a BREEAM target rating rather than the implications of the deviation from the recommended air flows. It is recorded that the energy target and the BREEAM rating should be the focus of a 'joint review', with no mention of reviewing air flows. Both issues are important but one might conclude that the lesser priority was taking precedence. Ironically, Brookfield were apparently awarded a variation of £250,000 to achieve this outcome.

Some disadvantages of 'Natural Ventilation' are that ACH rates are largely 'uncontrollable', other than through the design elements of the building that are provided to achieve it: ACH rates may vary greatly because of various natural phenomena, (e.g. external wind force and direction, the building orientation, the ability or otherwise for natural and necessary air flows to permeate the building etc.); particularly if there is an over-reliance given to those occupying the building to open windows to assist air flows.

Providing Natural Ventilation into a 'Sealed Building', i.e. a building with no opening windows and no built in 'perma-vents' (i.e. fixed openings to the outside of the building envelope, which will help achieve air flow through an internal space), can be problematic.

From past personal experience; there are inherent difficulties in achieving good, consistent 'natural ventilation' air flows. Generally, the poor understanding and paucity of 'design expertise' employed to achieve 'natural ventilation' when building new hospitals, often leads to unsatisfactory and variable outcomes. The resulting air flows utilising Natural Ventilation are invariably inconsistent. It was probably because of this and due, in part, to the increasing sensible heat gains in modern hospitals, (and certainly as a requirement in 'sealed' buildings), that a nominal rate of 6 ACH for general ward areas was recommended in the Technical Guidance. It isn't clear what, (or if), research was conducted to arrive at this figure of 6 ACH, but the fact that it is now actually 'defined' and recommended as 6 ACH, seems a reasonable improvement to the potentially erratic and undefined historic levels in the general hospital wards.

In consideration of the guidance's recommendations, a 10 ACH ventilation rate would therefore be reasonable, intuitive variation on the 6 ACH recommended for General Wards for application in Ward 2A as it is a 'Critical Care area'. The basis of the increase in ACH for Isolation Rooms, although perhaps intuitive might be considered of lower importance, as the prime motivators for having ventilation, (i.e. fresh air and odour dilution), could arguably already be satisfied by 6 ACH. In addition, and perhaps of higher importance, further consideration may also have been reasonably expected about the relative pressure of the Isolation room to its adjacencies.

The CBUs installed would not function effectively at flow rates above 40 ltrs/sec and the central Air Handling Unit has a limited capacity which is presently close to its maximum. It will not therefore be possible to improve the ventilation rates with the currently installed ventilation system.

SUGGESTED RECOMMENDATIONS (for consideration)

13 From the manufacturer's information on ZUTEC, there is a Module which can deliver 55lts/sec. It would be helpful to determine the exact maximum airflow capacity of the module installed and to find out if it was possible to increase the airflow through the installed system

The AHU might need to be up-sized to deliver improved air volumes that equate to the Guidance recommendations. The distribution ducts, which are currently sized for the existing flow rates would need to be changed for larger ducts, with the possible knock on implications for the space for the ducts to run in within the existing spaces where services are installed. The Low Temperature Hot Water and Chilled Water systems that serve the AHUs would need to be checked and possibly upgraded and additional heating and cooling batteries, together with all of the associated electronic hardware to control the systems might also be required to cope with the increased air flows. The Electrical system may also need to be upgraded to power the additional plant after first determining if the necessary capacity is actually available to feed an upgraded system. Depending on the possible increases in

Official Sensitive - DRAFT

electrical demand, there might also be implications on the replacement of electrical switchgear, cable sizes etc. The requirement for all, or any of these changes, would need further technical investigation. Alternative designs could be investigated, but the intervention, irrespective of the chosen design solution, would be highly complex and very disruptive. This would almost certainly include ward decants for extended time periods, with the knock on implications to healthcare delivery, possibly affecting waiting time and other targets. There is a risk too that, in striving to achieve a more acceptable air flow rate, which inevitably involves highly complex, retrospective alterations and perhaps having to accept some unpalatable compromises to achieve a practical solution, some residual issues may remain to contend with. One would need to fully comprehend the benefit to be achieved by increasing the ACH and to balance the net benefit gained against the impact of the costly, disruptive process to achieve it.

Official - Sensitive - DRAFT

J. Leiper. B.Eng. (Hons.), C.Eng. MIHEEM,
Project Manager, NHS GG&C
October 2018

5.0 Risk Issues

5.1 Cross Infection

As part of the normal operation of the CBUs, a proportion of the air in the room is cooled, (or heated, depending on what operation is required), and recirculated within the room by the CBU.

***Comment**: Due to this air flow, there is a possible risk of cross infection in clinical situations. Potentially contaminated fibres can become entrained on the CBU as it draws air from the space to recirculate it and be released back into the patient's space, giving rise to potential 'cross infection' between one patient vacating and a subsequent patient occupying the same room. Cleaning of the CBU is therefore important to reduce that risk and there is a periodic cleaning regime established to mitigate this risk.*

5.2 Condensation – Dew Point

There was no dew point control incorporated into the design of the chilled beam units.

SHTM 03-01 Part A, Page 26

2.39 Care should be taken in positioning chilled beams to ensure the avoidance of cold draughts particularly when used in the cooling mode. The control settings should ensure that the external elements of the beam are always above dewpoint.

Comment: *Under certain air moisture content and temperature conditions, it is possible that some of the moisture contained in the air will condense on the CBUs and 'rain' water droplets into the occupied space. If dew point controls were fitted on the individual CBUs, the risk of condensation issues would be greatly reduced.*

The SHTM (see above) recognises that there is an issue with dewpoint control and specifically advises that the CBU operates under controls that ensure "that the external elements of the beam are always above dewpoint."

There is a cleaning protocol implemented to reduce the infection risk if these conditions arise, but the execution of this can be difficult if the issue is occurring in large numbers of rooms at the same time.

Information has not been observed at this stage of the current examination, on the level of detailed consideration afforded to this specific issue by the Project Team/Project Director or by the Board's Technical Advisors. It is understood however, that the proprietary dew point controls were available at the time of installation, and their inclusion would have allowed a finer degree of control of the dew point at each CBU, hence reducing the risk of condensation into the space, but these were not installed, presumably as a 'cost saving' or a 'value engineering' measure at time of design/construction.

The air conditions that need to exist to allow the condensation to form are fairly infrequent, perhaps only happening a handful of times in a year, but it would have been quite obvious that these conditions would be experienced from time to time. Assuming that the decision makers at the time actually understood the implications of their decision, they effectively put the Board in a position of accepting the infrequent, albeit predictable condensation risk.

In an attempt to reduce the risk of condensation on the CBUs, the NHS GGC Estates team implemented a retrospective, innovative solution to by reorganising the settings of the central AHU. This allows them to mitigate the effects of dew point condensation within the patient environment. This is not as effective as it could have been with manufacturers' individual dew point controls installed at the CBUs at construction, but it will have a beneficial impact on the incidence of the condensation on the CBUs.

If felt important, further investigation would be required to find out if this could be established.

Official Sensitive - DRAFT

6.0 <u>Ventilation Design</u>

***Comment**: By way of explanation, in general, a particular direction of air flow between adjacent rooms is achieved by the relative location of the ventilation supply and extract grilles. Differential pressures are achieved by arranging the rate of air being supplied to be slightly greater than that being extracted, to create a 'positive pressure' or slightly less than that being extracted to create a relative 'negative pressure'. If exactly the same rate of air is supplied and extracted, the differential pressure is said to be 'Neutral'. Therefore, the location of supply and extract grilles and rate the of air flow are critical determinants for the direction of air flow and for the relative differential pressures between adjacent spaces, which can arranged to allow the safest care environment for the patient, staff and other building occupants.*

6.1 Normally Installed

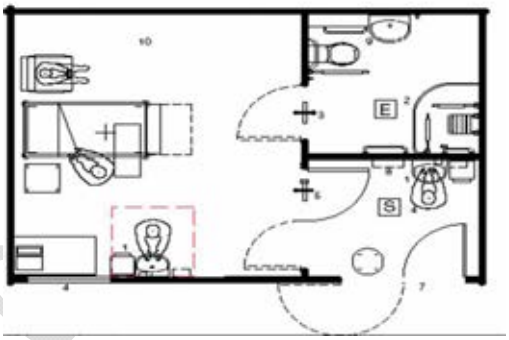

The 'normally expected' ventilation system design and standard layout recommended for both 'Protection and Source Isolation' is given in the SHPN 04 Supplement 1. (See adjacent drawing).
This is achieved by the placing of the full air extract from the space, within the ensuite area of the facility. There would normally be a pressure balanced air transfer grille in the door (as shown) between lobby and the bed area and between that and the ensuite to allow a passage of air when the doors are closed.
SHPN 04 Sup. 1 suggests how rooms that were not originally designed for 'Isolation' might be altered to achieve the most effective air flow configuration to afford the best possible solution from the prevailing room layouts.

***Comment**: Despite the suggested alteration solutions noted in the Guidance, one might reasonably expect the normal standard isolation configuration to be provided in a new build, when there are no constraints to the design of choice.*

6.2 The Installed Ventilation System

The system actually installed by Brookfield, incorporated an extract grille on the ceiling in the patient's room and a further extract within the ensuite.

***Comment**: The vast majority of the extract air flow in the installed arrangement, would be fully taken from the patient's room at the ceiling, with a small proportion of the extract ventilation taken from the ensuite. The ensuite extract is similar to that normally installed in general toilet facilities, primarily for the removal of odours.*

In circumstances where 'Source Isolation' of 'infectious patients' is necessary, (a different purpose than for the 'Protective Isolation' of patients), an arrangement that might be utilised is to have the supply of air flowing from the lobby to be extracted in full, from the patient's room via an extract grille in the patient's room located at the patient's head, on the wall behind the patient. (SHPN 04 Supp. 1 Page 17 Section 4.12). The intention of this arrangement would be to allow an air flow from the 'positively pressured' lobby into the room; across the patient to the extract grille. This would also afford the staff caring for the patient some degree of infection protection from the patient in addition to creating the 'source isolation' of the patient. The placing of the extract in this arrangement would ideally be done in consultation with clinical colleagues with consideration of the type of airflow that would most benefit the patient being cared for.

Placing the extract grille on the ceiling of the patient's bedroom might lead to an airflow which does not effectively flow over the patient. The protection of staff caring for the patient may therefore compromised.

J. Leiper. B.Eng. (Hons.), C.Eng. MIHEEM,
Project Manager, NHS GG&C
October 2018

Official Sensitive

This arrangement is mentioned in the SHPN 04 Supplement 01 guidance, (See Annex 3). A note, (in Table 1, page 16), says, **'if** extract is fitted in the Isolation Room, …… **'**.

***Comment**: Given the comment in Table 1 of SHPN 04 Sup. 1, it could be argued that, this kind of arrangement, where an extract is placed on the ceiling in the patient's room and also in the ensuite, is 'recognised' by the Guidance. In context however, by the way the note is written in Table 1, (saying, 'If extract is fitted in the isolation room...'), one might reasonably, readily conclude that this arrangement, albeit recognised as a possibility, it is not the normal arrangement that would be expected. One can only therefore speculate as to the reason why this arrangement appears to have been the 'arrangement of choice' in this project.*

There were apparently, no transfer grilles originally provided through the project and so, when the door to the bathroom area was closed, this effectively isolated the extract ventilation component from the patient's bedroom, other than the airflow that would get through the small spaces left around the door, e.g. between the door and the floor or via any other passive measure that might be installed.

SHPN 04 Supplement 1, states on Page 17, Section 4.2 - 4.4 (inclusive),

4.2 The isolation suite and its ventilation system are based on a validated design. The engineering guidance given in this Section aims to provide a practical, 'fail-safe' design solution for isolating patients on acute general wards.

***Comment**: This guidance is intended for patient isolation on an Acute General Ward setting, not where highly infectious or neutropenic patients are being treated.*

4.3 The ventilation system is designed on the basis that all its constituent parts, as described in Table 1, work together to form an integrated system. For example, air to the suite is supplied at high level in the lobby, with extract in the ensuite bathroom. This ensures good airflow through the entire isolation suite. Similarly, the volumetric airflow rate in the lobby is determined by the number of air changes required in the patient's bedroom. Modifying or failing to provide one element of the system will jeopardise the performance of the system as a whole.

***Comment**: It could be argued, that from technical perspective, placing the extract within the isolation room is a modification to the normally expected design of this kind of isolation facility, particularly for the nursing of neutropenic patients (c.f. 4.4. below), but it would be difficult to argue this on a 'legal' basis as the guidance itself allows a degree of design latitude and there is an absence of standard guidance for specialist isolation facilities.*

4.4 ……. "Where immunocompromised patients are to be accommodated, such as in transplant units or specialist cancer units, there could be a need for positive pressure isolation rooms."

***Comment**: This has not apparently been taken into account in arriving at a solution provided.*

6.3 Single Point of Failure

The central Air Handling Unit, (AHU), for Teenage Cancer Trust, (TCT), is a single AH unit with inherent 'single point of failure' and maintenance shut down implications. There are dual motors in the AHU, which again are 'allowed' by the guidance. The annual verification of the AHU requires the AHU to be shut down. Shutting down the AHU for any period of time will impact on the ability of the ward to function safely and provide the necessary airflow to protect the patient.

***Comment**: This is perhaps reflects the difference between how an in house estates professional would view the recommendations in the guidance and the interpretation that the Contractor has arrived at. The risks associated with the installation provided, involved with the periodic planned necessity to shut down the AHU and also any unplanned failure of the AHU, means that the protection afforded by the air flow regime within the ward would effectively disappear if the AHU was not functional.*

J. Leiper. B.Eng. (Hons.), C.Eng. MIHEEM,
Project Manager, NHS GG&C
October 2018

Official - Sensitive - DRAFT

There had apparently been a subsequent investigation to find out if a second AHU could be introduced to reduce this risk and apparently, David Louden, I understand, reported that this would not be possible because of the lack of space in the plant room. It is thought possible that a solution could be found to provide a second AHU and that this should be investigated.
Further, a more radical approach could be to completely remove the existing Chilled Beam installation and replace them with a new duty/standby AHU. It maybe that elements of the exiting ductwork system could be utilised in a new installation, but it is possible that the whole system might need renewed to achieve the necessary requirements of a new system. The project to achieve this would be highly disruptive, expensive and time consuming and would need meticulous planning and execution.

SUGGESTED RECOMMENDATIONS (for consideration)
14 The associated risk arising from the TCT single AHU should be assessed and recorded in the Board's Risk Register along with the mitigation employed by the Board to manage the risk.
15 The provision of a second AHU should be fully investigated and costed for consideration.
16 Consider the merits of replacing the Chilled Beam system

6.4 Corridor Ventilation
There appears to be no specifically recommended air change rate for general corridors. There are some recommendations for some types of corridor, e.g. within a Theatre Suite, where the recommendation is for 7 ACH.
In the absence of specific corridor air change rates in the guidance, corridors would only need to comply with general requirements for the provision of fresh air and the necessity of this fresh air, not to cause drafts or other discomfort to the occupants etc. (See excerpts from SHTM below)
The ward corridors have extract ventilation, with the exception of the Nurses Station, where supply ventilation provides a fresh air supply around 40 l/s.

***Comment**: The provision of 40 l/s of fresh air would satisfy the Building (Scotland) Regulations for about 5 people, if each person requires 8 l/s of fresh air.*

The majority of the supply of air to the corridors actually cascades from the rooms. This is a common situation that is recognised and allowed in the SHTM guidance, particularly within Theatre Suites. (See excerpts from SHTM below).

***Comment**: The rate of airflow in a corridor therefore, will not only be dictated by the supply and extract airflow physically installed in the corridor, but also from the cascade from the patients rooms if the corridor is at a relatively 'negative pressure' to that source.*

SHTM 03-01 Part A Page 25
2.30 If general exhaust systems are used; it is recommended that filtered and tempered replacement air is provided via a central supply plant to adjoining lobbies or corridors, to prevent the risk of discomfort caused by the ingress of cold air. Fire compartmentation requirements must be maintained.
SHTM 03-01 Part A Page 25
Cascade ventilation
2.35 In operating departments it is normal practice to supply air to the operating room, and allow it to pass through less clean areas – corridors, utility rooms etc. (from where it is eventually extracted).

Most wards have a split air conditioning unit at the Nurses' Station in the corridor to give a degree of comfort cooling around that location, but this could not be provided in 2A because of the potential infection risk from a split air conditioning unit to an immunocompromised patient group.

***Comment**: The use of split air conditioning units was discouraged by a Safety Action Notice some years ago.*

J. Leiper. B.Eng. (Hons.), C.Eng. MIHEEM,
Project Manager, NHS GG&C
October 2018

Official-Sensitive - DRAFT

There has been some indication that the Users have complained consistently about the high humidity levels in Ward 2A and that there have been ongoing complaints about humidity and heat in the ward.

Comment *– During the recent decontamination process on ward 2A, where Hydrogen Peroxide Vapour (HPV) was used to sanitise the ward, it was reported that, 'one cycle failed because of humidity' … the 'humidity issue', was then raised at a meeting (end May / start June 2018) by Professor Gibson who indicated that complaints had been made 'for a long time' about temperature and humidity. Whilst there had been an on-going complaint about temperature, this was the first time humidity had been raised by the User to anyone in the Estates Department as being a problem. There is a sense of poor air movement in the corridor and this might be due to the relative position and flow rates of the supply and extract grilles on the ward. Ian Powrie had indicated that he would try to improve this situation by moving one of the extract grilles to encourage a better air flow pattern in the corridor.*

Upon learning of the claim by Professor Gibson, Ian Powrie measured the humidity on the ward that same afternoon. The RH across the ward was 40%, which is a reasonable level. Temperature was 26.5^{o}C at the Nurses Station, which is quite high, but ironically would be within the limits of the design. The setting in the room thermostat was 24°C. When investigated by Ian, it was found that the compensated cooling flow, which effectively cools the air going into the ward, had been set up at commissioning of the system to close down, possibly for energy conservation purposes, making it less able to cool the incoming air to the ward. This was apparently the control strategy that was adopted to save energy on cooling. Ian Powrie has now reversed this setting for this ward, because of that particular issue, and the ward will now receive an increased cooling effect. Ian checked back on this at the ward and has found an improved situation with regard to the occupation temperature.

A positive pressure protection Lobby has not been provided in the corridor access for the TCT in ward 2.

Comment*: This could be created by the provision of a second set of doors at the entrance to the ward. If created, the protection zone created could be sustained at positive pressure, thereby offering the ward corridor protection from the external corridor systems and stairwells.*

SUGGESTED RECOMMENDATIONS (for consideration)

17 Investigate the technical possibility and cost of establishing Positive Pressure Ventilated Lobby in this location and give consideration to the patient benefit to be derived from its introduction.

6.5 Thermal Wheel

A Thermal Wheel has been installed in the ventilation system as a means by which heat energy can be saved from the air being extracted from the building and transferred to the incoming supply air.

Comment*: The general principle of the Thermal Wheel operation if that air, extracted from the building passes through a rotating mesh wheel. Heat from this airflow is transferred to the mesh, which is then 'picked up' by air coming into the building through the ventilation system as the mesh wheel is rotated into the path of the incoming air flow.*

SHTM 03-01 Part A, Page 57

4.144 For systems in healthcare premises, a plate heat exchanger or 'run-around coil' system is suitable. Thermal wheels may be used providing they are fitted with a purge sector. The small amounts of air leakage across those devices are not considered significant. Other systems such as heat pumps or heat pipes are also suitable. Selection should be based on relative locations of the supply and extract units, ease of maintenance and practicality. Cleaning access will be required to both sides of any energy-recovery device.

Comment*: In addition to the transfer of heat, it is possible that organisms could also be transferred between extract and supply air during the operation process of a Thermal Wheel. The above excerpt from the SHTM notes the suitability of plate heat exchangers or run-around coils in 'healthcare premises'. These systems have a physical isolation between the extract and supply flows, reducing the possible risk of transfer of microorganisms. It then suggests that Thermal Wheels '**may**' be used if fitted with a 'purge sector'. A Thermal Wheel is a good general measure to take to improve the energy efficiency of the ventilation system and would be a good contribution to achieving an 'excellent' BREEAM*

Official - Sensitive - DRAFT

*rating, but just because a Thermal Wheel 'may' be installed, one would need to assess whether it would be '**right**' to install one in the prevailing clinical environment with particular consideration of the possible risk to the patient population being cared for in that environment. One might conclude that other options might have been more appropriate in these circumstances.*

SHFN 30 Part B: HAI-SCRIBE - Implementation strategy and assessment process

The SCRIBE set of Guidance recommends an intensive assessment of ventilation systems intended to identify any potential risks arising from these systems, particularly where the systems serve areas where 'High Risk' patients are being cared for.

***Comment**: One would expect that a Thermal Wheel installation within a hospital ventilation system would have attracted specific attention for assessment, given the potential for pathogenic organisms to be transferred from the extract into the supply ventilation airflow. It would be helpful to review the content of any assessment undertaken at design stage to determine if the findings at the time are still considered correct and appropriate in the given clinical environment.*

SUGGESTED RECOMMENDATIONS (for consideration)

18 Identify and review any existing SCRIBE Assessment in relation to the ventilation system and in particular, with reference to Thermal Wheel installations.

19 Consider, with appropriate input from clinical and infection control colleagues, if the operation of a Thermal wheel is still appropriate in the prevailing clinical environment, recording findings to provide a record of the assessment.

***Comment**: if the Thermal Wheel is prevented from turning, the possible risk of any transfer of microbiology could be greatly reduced as an initial, immediate mitigation, if considered appropriate for 'high risk' areas and the financial loss from the reduction in energy saving of the components is accepted.*

Official - Sensitive - DRAFT

J. Leiper. B.Eng. (Hons.), C.Eng. MIHEEM,
Project Manager, NHS GG&C
October 2018

7.0 Handover

When this area of the hospital was handed over on 15th June 2015, (approximately 5 months after the adult hospital was handed over in January 2015), the NHS GGC Sector Estates Manager, Ian Powrie, visited the area to see the facilities.

7.1 Observations by NHS GGC

Ian Powrie, the Sector Estates Manager observed that:

1 The extract ventilation from this intended 'Protective Isolation' room was provided in both the isolation room and the ensuite.

Follow up: When brought to the attention of Brookfield and the Project Team, the response from Brookfield was that this configuration was 'allowed' in the Guidance, which was apparently accepted by the Project Manager / Team.

***Comment**: The 'argument' about the 'acceptability' by Guidance of this particular configuration, is discussed above.*

2 The required HEPA filters had not be provided or incorporated in the PPVL supply Terminal Grille in the Lobbies for each of the Isolation Facilities

Follow up: At first Brookfield indicated that their understanding was that they had provided a ventilation installation facility 'to be utilised' and expected the Board to supply and install the filters. After protracted discussion, Brookfield supplied and installed the HEPA Filters, which meant that they had to re commission and validate the system after the filters were fitted.

***Comment**: This situation again reflects that importance of detailing the Employers' Requirements at the beginning of the project. In order to achieve this level of detail, the Mechanical and Electrical Engineering input to the design and specification needs to be much more attentive and deliberate than it has been in this instance. It may have been a reasonable expectation that the filter media would have been supplied along with the installation. The absence of the filter media may have initially been an oversight by the Contractor. Whether this was the case or not, the lack of detail in the specification leaves the Contractor the ability to argue on interpretation detail, which might appear questionable at least to the neutral/reasonable observer.*

3 The room air permeability had not been validated to confirm the efficacy of the air tightness of the Isolation rooms.

Follow up: When the air permeability validation was carried out by Brookfield, (after a protracted argument with Brookfield about where the responsibility for this test lay and the eventual acceptance by Brookfield that this was actually their responsibility), the rooms failed the tests. Air was 'escaping' from the room via various orifices. Acceptable results for air permeability were only achieved after Brookfield had retrospectively sealed the edges of the various panels covering pipework and electrical service in the rooms.

***Comment**: The sealing of these Integrated Plumbing Services, (IPS), panels inhibits subsequent maintenance activity where access is required to the services behind the panels.*

4 Subsequently, the differential pressures between the Lobby and the Isolation Room and between the Isolation Room and the ensuite were tested. The differential pressures were satisfactory, i.e. achieving a 10 Pascal differential. However, the Guidance (SHPN 04 Supplement) indicates that the room differential pressures should have had a system installed at the Nursing Station in the ward that monitors the differential pressures and gives the nurses on duty an indication that the differential pressure is not being maintained, e.g. because a door has been left open or similar. This link has not been provided and the alarm is only monitored by the BMS in the Estates Department.

***Comment**: It would not be feasible to have differential pressure alarms fed back to the estates department for response. It needs to be the responsibility of the Nursing staff to manage any causes of deviation from the established pressure differential regime. The alarming of any prolonged deviation in*

Official - Sensitive - DRAFT

the differential pressure regime should be of such a persistent nature that it encourages staff's early intervention to correct the issue causing the deviation.

Official - Sensitive - DRAFT

J. Leiper. B.Eng. (Hons.), C.Eng. MIHEEM,
Project Manager, NHS GG&C
October 2018

8.0 <u>Conversion from PPVL to Isolation Rooms</u>

The conversion from PPVL to positive pressure was agreed at a working group chaired by Jamie Redfern, W&C Gen Manager in 2017. The Ventilation on the ward was reviewed and the clinical team expressed a preference for a positive pressure control regime to protect highly neutropenic patients, post operation for Bone Marrow Transplant.

***Comment**: In the absence of specific guidance on the environment for Neutropenic patients, other than the basic recommendations of 'ACH to be 10 at +10 Pa positive pressure with H12 HEPA Filtration, within the temp range 18-28°C. (See Annex 2 - SHTM 03-01 part A Appendix 1 Table A2), the environment to be provided needs to be decided by professionals working collaboratively, in the light of current guidance that is available for similar environments.*

It was agreed, after effective 'lobbying' by the Infection Control Doctor and Prof Gibson that 4 rooms would be converted to positive pressure, i.e. where the room is positive to the ensuite and also to the Lobby and the Lobby is positive to the corridor. This means that the patient's bedroom is +10 Pa to the Lobby and the Lobby is 6 Pa to the corridor = room 16 Pa to the Corridor. The extract was to be moved into the ensuite and the supply was moved into the room. A pressure balance damper was added to the ensuite and the pressure balance damper between the room and the Lobby, was reversed to allow a flow from the room to the Lobby. This effectively created an air flow from the room to all adjacent spaces, also creating a 'positive pressure bubble' for the patient. This work was completed in and patients were moved in at the end of March 2018. Currently, there is an option to do the same work to the remaining 4 rooms, if and when the clinical demand (patient throughput) increases.

Official - Sensitive - DRAFT

J. Leiper. B.Eng. (Hons.), C.Eng. MIHEEM,
Project Manager, NHS GG&C
October 2018

9.0 <u>Commissioning</u>

SHPN 04 Supplement 1, requires a series of validation commissioning tests to be carried out on an Isolation Facility.

***Comment**: It is clear, from the initial findings of the Sector Estates Manager at handover, that the commissioning process, and hence the technical oversight of the commissioning process, appears to have been deficient in several important areas. The independent examiner's remit might usefully be revisited to examine how these deficiencies could be avoided in future projects.*

Further, the retrospective rectification of these deficiencies leave a legacy which results in the maintenance of the facility being more technically intensive and potentially at higher risk than necessary due to the nature of the solution employed.

<u>SUGGESTED RECOMMENDATIONS (for consideration)</u>

20 There appears to be a need to improve the confidence of the Client in the efficacy of the commissioning process. Review the range of duties and responsibilities of the Independent Examiner to improve the confidence of the Client in the process.

Official - Sensitive - DRAFT

J. Leiper. B.Eng. (Hons.), C.Eng. MIHEEM,
Project Manager, NHS GG&C
October 2018

10.0 Planned Preventative Maintenance, (PPM), Compliance

Difficulties have been experienced with the transfer of data onto a usable Computer Aided Facilities Management (CAFM) System, e.g. FM First.

***Comment**: Compatibility is essential to enable data transfer between IT systems. Brookfield did not provide a system that was capable of easily transferring data with the chosen CAFM system. There may have been some issue with the decision making by the Board around the exact system to be provided, which may have impacted on this issue.*

The Contractor, (Brookfield), did not initially asset tag all of the assets. This was only latterly carried out and completed by Brookfield in August 2017. The Contract apparently allowed the Contractor a 60 day period after handover to complete the provision of the operational PPM system that was specified.

***Comment**: The tagging of the assets is the first and essential step in establishing a functioning PPM system. The 'tag' is the unique identifier that enables tailored maintenance regimes to be established for specific items of plant and to provide feedback onto the system of the maintenance functions on each and every component. The record created by this process is evidence that is able to support the Board in demonstrating it is undertaking sufficient and appropriate maintenance on its systems, which it is statutorily required to do. If the plant is not identified, the foundation upon which a PPM system is build is placed at a great disadvantage, particularly if trying to maintain such a large and complex technical installation. A fully functional CAFM system would have been an essential component to allow the efficient maintenance of the new hospital and the systems installed. Ideally, this would have been fully functional with sufficient operator familiarisation to allow ease of use, at the opening of the Hospital. Any caring professional would consider a 60 day period after handover would be used to correct any bugs in a fully functioning, efficient and tested PPM system; not to start on its provision and construction, as appears to have been the case in this instance.*

A form of data was provided by the Contractor called ZUTEC. This is not a recognised CAFM system that is used elsewhere in the NHS in Scotland. The quality of the data provided, even on a reduced asset list, was a lower quality than expected and apparently, specified. After protracted discussion and work by the NHS IT team to create a standard template for Brookfield to populate, the delivery of ZUTEC was somewhat belated, resulting in further work by the in house team to migrate the asset data on to FM First.

***Comment**: It appears that Brookfield considered that providing ZUTEC satisfactorily discharged their contractual responsibilities to the Board for the provision of a CAFM system. The fact that there was 'protracted discussion' about this provision and the difficulties that the system has introduced to the Board because of the poor quality of what was provided leads one to conclude that the quality of the contractual requirements were not of an adequate standard to establish an unequivocal understanding of what was required.*

SUGGESTED RECOMMENDATIONS (for consideration)

21 Writers of any future contractual Employers Requirements could learn valuable lessons for the obvious lack of definition of this part of the Project.

22 It should be an express requirement for IT systems to be fully commissioned with the hospital and that these should be populated and fully functional and suitably tested to ensure the Board's satisfaction.

***Comment**: The initial absence of an efficient functioning CAFM system has affected the ability of the board to effectively operate and monitor a recognised PPM programme.*

The process of establishing an efficient operational IT system has already started and it is being aligned to SFG 20, (a 'Building Services Association', recognised industry standard PPM Schedule). Completion of this task is expected within the financial year 2018/19. Prioritisation of establishing PPM has taken place, with critical systems taking precedence. The PPM for all of the isolation rooms is currently in place and operational.

J. Leiper. B.Eng. (Hons.), C.Eng. MIHEEM,
Project Manager, NHS GG&C
October 2018

Official - Sensitive - DRAFT

***Comment**: The time and effort taken by the in house Estates Team to unpick the deficiencies of the system eventually provided through the project and to establish and efficient operational system has been an enormous task. Work continues on the PPM system to improve its effectiveness and resilience. The Board has been vulnerable in the interim period and compromised by not having an efficient operational PPM system fully functional at the handover of the hospital.*

Official - Sensitive - DRAFT

J. Leiper. B.Eng. (Hons.), C.Eng. MIHEEM,
Project Manager, NHS GG&C
October 2018

Annex 1

Extract from M&E clarification Log (Final Agreed for Contract)

> ***Comment****: This is a 'Pre Contract' clarification log. Given the scale of the derogation from the SHTM recommendations, one might have a reasonable expectation that the Board's Technical Advisors, (Wallace Whittle and / or Currie & Brown), would have fully assessed the implications of the proposal and scrutinised it in detail and advised the Board accordingly. A complication in the technical advisor arrangements at that time, was that ZBP, (Brookfield's M&E Designers), went into receivership mid contract and their 'design liability' was apparently assumed by Wallace Whittle's London office. This arrangement was put in place to allow separation and a level of independence of the two roles that Wallace Whittle were now performing, because of a potential conflict of interest.*

Ventilation:

Board Comment: Ward Air change to be 6AC/HR, currently shown as 2.5AC/HR which is not in compliance with SHTM 03-01.

Status: Agreed

Brookfield Comments: Brookfield proposal as outlined within the bid submission is to incorporate chilled beams as a low energy solution to control the environment which do not rely on large volumes of treated air or variable natural ventilation. All accommodation is single bedrooms and therefore the need for dilution of airborne microbiological contamination should be reduced (rooms could also be at slightly negative pressure to corridor). Providing 6 air changes is energy intensive and not necessary.

Agreed Position: The proposal is accepted on the basis of 40 litres per second per single room (8 litres per second per second / person) for one patient and four others. Joint review to be carried out between the Board and Brookfield of the energy model to determine any impact on the energy target/BREEAM rating. Brookfield, however, remain responsible for achievement of the energy target/BREEAM, with £250,000 added to the contract sum in this regard. Negative pressure to be created in the design solution.

Extract from, 'the M & E Clarification Log', dated 14th December 2009

Position: Agreed

The proposal is accepted on the basis of 40 litres per second per single room (8 litres per second per second) for one patient and four others. Joint review to be carried out between the Board and Brookfield of the energy model to determine any impact on the energy target/BREEAM rating. Brookfield, however, remain responsible for achievement of the energy target/BREEAM, with £250,000 added to the contract sum in this regard.

> ***Comment****: I have been advised that once the clarification log was AGREED, it subsequently became part of the contract*

J. Leiper. B.Eng. (Hons.), C.Eng. MIHEEM,
Project Manager, NHS GG&C
October 2018

Official - Sensitive - DRAFT

Annex 2

Excerpt from Scottish Health Technical Memorandum 03-01 - Ventilation for healthcare premises Part A, (SHTM 03-01 Part A) – Design and validation

Appendix 1: Recommended air-change rates – TABLE A1

Application	Ventilation	ac/Hour	Pressure (Pascals)	Supply Filter	Noise (NR)	Temp (oC)	Comments For further information see Section 6
General ward	S / N	6	-	G4	30	18-28	
Communal ward toilet	E	10	-ve	-	40	-	
Single room	S / E / N	6	0 or –ve	G4	30	18-28	
Single room WC	E	3	-ve	-	40	-	
Clean utility	S	6	+ve	G4	40	18-28	
Dirty utility	E	6	-ve	-	40	-	
Ward Isolation room	-	-	-	-	-	-	See SHPN 4; Supplement 1
Infectious disease Isolation room	E	10	-5	G4	30	18-28	Extract filtration may be required
Neutropenic patient ward	S	10	+10	H12	30	18-28	
Critical Care Areas	S	10	+10	F7	30	*18-25*	Isolation room may be –ve press

Official - Sensitive - DRAFT

J. Leiper. B.Eng. (Hons.), C.Eng. MIHEEM,
Project Manager, NHS GG&C
October 2018

Annex 3

Excerpts from Scottish Health Planning Note 04 In-patient Accommodation: Options for Choice Supplement 1: Isolation Facilities in Acute Settings, Sept 2008

Exclusions (SHPN 04 Supplement 1, page 4 of 33).
1.10 This Supplement does not describe the specialist facilities required in infectious disease units or on wards where severely immunocompromised patients are nursed. Guidance for these facilities will follow in a further Supplement to SHPN 04.

Basic design parameters (SHPN 04 Supplement 1, pages 15 & 16 of 33, Para 4.4 including Table 1).

4.4 The patient's bedroom is to have 10 air changes per hour. The entry lobby is to be at +10 Pascals with respect to the corridor. The en-suite room is to have at least 10 air changes per hour and be at a negative pressure with respect to the patient's bedroom. Table 1 gives nominal design values calculated for rooms of the size stated. The air change rates and pressure differentials below should be maintained when filters are dirty. Variable-speed control of fan motors would be an acceptable method of flow control, within the normal operating range of the fan's speed.

(SHPN 04 Supplement 1, page 16, Table 1, 'Isolation Suite – Ventilation Parameters').

Room	***Parameter***	***Nominal Design Values***
Lobby	Room volumes Bed access lobby (5m2 x 2·7m) Personnel access lobby (4m2 x 2·7m)	13·5 m^3 10·8 m^3
	Pressure differential to corridor	Nominally 10 Pascals
	Supply air flow (for a room of this size)	Bed access lobby - 238 l/s Personnel access lobby - 208 l/s
	Air change rate	Bed access lobby – 63 per hour Personnel access lobby – 69 per hour
Isolation Room	Room volume (19m2 x 2.7m)	51.3m^3
	Pressure differential to corridor	Nominally zero
	Room air flow (for a room of this size)	158 l/s
	Air changes rate	10 per hour
Ensuite	Room volume (6m2 x 2·7m)	16·2m^3
	Pressure differential to isolation room	Negative
	Extract air flow (for a room of this size)	158 l/s (If extract is fitted in the isolation room this reduces to 45 l/s in the ensuite with 113 l/s extract in the isolation room)
	Air change rate	At least 10 per hour

J. Leiper. B.Eng. (Hons.), C.Eng. MIHEEM,
Project Manager, NHS GG&C
October 2018

Official - Sensitive - DRAFT

Table 1: Isolation Suite – Ventilation Parameters

Where immunocompromised patients are to be accommodated, such as in transplant units or specialist cancer units, there could be a need for positive pressure isolation rooms.

Official - Sensitive - DRAFT

J. Leiper. B.Eng. (Hons.), C.Eng. MIHEEM,
Project Manager, NHS GG&C
October 2018

Annex 4 – Summary of Suggested Recommendations

Page 4-5 - SUGGESTED RECOMMENDATIONS (for consideration)

1 The protocols relating to the recording of the elements of Clarification Logs and other similar important project records should be reviewed to ensure they are recorded in sufficient detail to provide a full audit trail. The intention here is to achieve a clear, unambiguous description of what will be delivered; to what extent this will be done and what the expected outcome(s), implications will be. There should be a record of the possible unintended consequences and risks resulting from the decision and where identified, how these will be managed in the future; by whom and who will be responsible for associated project and life cycle costs, which should be quantified or at least estimated.

2 Accountable Officers and next in line managers should assume more accountability for the competence of those reporting to them in decision making roles. Competence will relate, in particular, to experience, expertise, formal qualifications and training of decision makers. The intention here is to ensure, as far as possible, that the person(s) signing off elements of the project, which will affect the specification and provision of important engineering services, particularly when recommendations within extant guidance is likely to be derogated, has the competence to do so.

3 All of the people involved in the proposals, acceptances and agreements, should be named and appointed in writing with a clear record showing extent of their role(s), responsibilities and accountabilities. These appointments should recorded for reference in a central register, which should form part of the important project records. The purpose here is to allow a record that may be scrutinized in the future to inform any subsequent inquiry of the level of responsibility and accountability for the outcomes and consequences of the decisions they have taken or been involved with.

Page 7 - SUGGESTED RECOMMENDATIONS (for consideration)

4 The use of Guidance as a 'pseudo specification' should be avoided.

5 Boards need to be much more specific about the outcomes they require.

6 The caring experienced, professional within the Board should be the final, but reasonable arbiter on the interpretation of Guidance, at the very least in the run up to Preferred Bidder stage.

7 Consideration should be given to the formation of a National/Regional/Health Board team of caring professionals with the skill set (achieved through training, experience and expertise) that could be deployed to represent and help Health Boards undertaking major construction projects.

8 Consideration should be given to changing the prime motivator for projects and replacing the 'on time, under budget' ambition with the principal target being to reach a specification to deliver the 'safest, most appropriate, best value' healthcare outcomes, and if possible, to achieve this prior to the Preferred Bidder stage of a project.

Page 8 - SUGGESTED RECOMMENDATIONS (for consideration)

9 The Ventilation Guidance needs to be reviewed and updated to include, perhaps a few best practice exemplar designs for IDUs and Wards where severely immunocompromised patients are cared for.

10 This Guidance should be updated, within the next financial year, by HFS in consultation with the 4 UK home nations Health Services to achieve exemplar designs that could be applied across the UK.

Page 9 - SUGGESTED RECOMMENDATIONS (for consideration)

11 Agreed items (within the contract and specifications etc) should be recorded in a manner that ensures clarity of intent and in such a way that will allow recourse, principally and primarily through informal processes, if the intended recorded outcome falls short of the recorded expectation.

12 The strategic learning outcomes from experience gained from this project should alter procedures for all future projects in order to improve patient safety; governance assurance and the quality of the practical outcomes achieved. The Post Project Evaluation process is helpful but there is little evidence to show that the experiences in one project are being effectively applied to improve the outcomes of

J. Leiper. B.Eng. (Hons.), C.Eng. MIHEEM,
Project Manager, NHS GG&C
October 2018

Official - Sensitive - DRAFT

subsequent projects. There should therefore be an effective process to ensure an adequate review of PPEs and the subsequent application on future projects.

Page 10 - SUGGESTED RECOMMENDATIONS (for consideration)

13 From the manufacturer's information on ZUTEC, there is a Module (Chilled Beam Unit) which can deliver 55lts/sec. It would be helpful to determine the exact maximum airflow capacity of the module installed and to find out if it was possible to increase the airflow through the installed system

Page 15 - SUGGESTED RECOMMENDATIONS (for consideration)

14 The associated risk arising from the TCT single AHU should be assessed and recorded in the Board's Risk Register along with the mitigation employed by the Board to manage the risk.
15 The provision of a second AHU should be fully investigated and costed for consideration.
16 Consider the merits of replacing the Chilled Beam system

Page 16 - SUGGESTED RECOMMENDATIONS (for consideration)

17 Investigate the technical possibility and cost of establishing Positive Pressure Ventilated Lobby in this location (at the TCT) and give consideration to the patient benefit to be derived from its introduction.

Page 17 - SUGGESTED RECOMMENDATIONS (for consideration)

18 Identify and review any existing SCRIBE Assessment in relation to the ventilation system and in particular, with reference to Thermal Wheel installations.
19 Consider, with appropriate input from clinical and infection control colleagues, if the operation of a Thermal wheel is still appropriate in the prevailing clinical environment, recording findings to provide a record of the assessment.

Page 21 - SUGGESTED RECOMMENDATIONS (for consideration)

20 There appears to be a need to improve the confidence of the Client in the efficacy of the commissioning process. Review the range of duties and responsibilities of the Independent Examiner to improve the confidence of the Client in the process.

Page 22 - SUGGESTED RECOMMENDATIONS (for consideration)

21 Writers of any future contractual Employers Requirements could learn valuable lessons for the obvious lack of definition of this part of the Project.
22 It should be an express requirement for IT systems to be fully commissioned with the hospital and that these should be populated and fully functional and suitably tested to ensure the Board's satisfaction.

Official - Sensitive - DRAFT

J. Leiper. B.Eng. (Hons.), C.Eng. MIHEEM,
Project Manager, NHS GG&C
October 2018

NHS Greater Glasgow & Clyde
QEUH RHC Wards 2A & 2B Project Board
7th March 2022

Project Manager's Report

1. **Current Programme**
   - o Construction works are complete.
   - o Validation of all systems now complete, ventilation report issued with this paper for noting.
   - o Demonstrations of all systems to NHSGGC Estates and clinicians took place over w/c 14 February and 21 February 2022.
   - o Significant dialogue has been undertaken with SG/NHS Assure in relation to the water safety within the ward. This has involved the ongoing enhanced sampling, trend analysis, temperature logging, SOP reviews and risk assessments. This has involved the input of many NHS stakeholders including ICDs, Healthcare Scientists, Estates, Facilities, Senior Clinicians and Senior Management. NHS Assure have now confirmed their endorsement subject to some recommendations which will be in place prior to the 9th March. It should be noted that this piece of work reported to its own Water Technical Group, the minutes of this group and associated documentation should be referred to for more information.
   - o The Ward is now mobilising for occupation on 9 March 2022.

   - o Programme update as follows;
     - Feasibility Study and Sketch Designs – 14th June 2019 (Complete)
     - Approval of Design Intent – 6th September 2019 (latest revision plus Stage 3 supplement) – (Comments received but no formal agreement to derogations)
     - Tender Issue – 9th September 2019 (Complete)
     - Tender Returns – 10th October 2019 (Complete)
     - Contract Appointment – 1st November 2019 (Complete)
     - Contract Commencement – 14th November 2019 (Complete)
     - Completion of Physical Works – 21 February 2022 (Complete)
     - Indicative Completion of T&C Activities and Handover – Complete
     - Secondary verification check – Complete
     - NHS commissioning works - Complete
     - Clinical move in date – 9 March 2022

2. **Progress**
   Construction Works are now complete and the site has been handed over to NHS GGC. The following work might need to be considered post-occupation;
   - The service have advised they might need to change the specification of the door finger guard strips within the MIBG suite. Those fitted are made of a silicone based material which radioactive isotopes might stick to. Alternative, plastic type finger guards are being sourced.

3. **Commissioning, Handover & Remobilisation**
   Weekly non-technical mobilisation meetings with Operational and Clinical personnel are ongoing and a tracker has been developed identifying all required actions and action owners, which will be used to track progress in the lead up to ward re-opening on 9 March 2022.

4. **Information Required**
   None at present.

5. **Funding**
   Refer to finance report reflecting current allocation and spend.

6. **Risks - Programme & Financial**
   MPMH are projecting a final account significantly higher than what the Cost Advisor believes will be due, there is a high risk of an elongated period to resolve the final account that will stretch beyond the completion date. The Board should be cited on this risk and the potential liability, however this will have no bearing on ward occupation and activity.

7. Change Requests

Post-contract Change Control Requests now implemented all as reported in previous Board Reports. During the final remobilisation period, a significant number of additional small items are being requested and being undertaken by local joiners, painters, etc out with the contract. These are not of a value that warrant a change control process.

8. Risk Register

A summary of the top-rated risks is detailed at the end of the report.

9. SHTM Derogations

- Derogation 1, 3 and 4 have been issued, agreed an added to the boards central derogations register.
- Derogation 2 is not required due to change in design to include drip trays.
- Derogation 5 in relation to system tolerances not required, a file note was issued and agreed.

10. Quality Control

Final clinical and IC snagging site visits ongoing.

11. Health & Safety / Infection Control

Construction Works are now complete and MPMH have left the site. Operation & Maintenance files inclusive of H&S file will be issued imminently once final commentary is incorporated.

12. Site Visits

Numerous site visits have been undertaken or are being planned for the following groups;

- Site visits have been accommodated for parties in relation to the ongoing Public Enquiry.
- Numerous visits have been ongoing with staff groups.
- Site visits for the families of patients who will be moving back into the ward are being accommodated when requested.
- A site visit was undertaken with the two families who fundraised for the new ETYC on Saturday 5th March. They were delighted with the finished room.

13. Comms

A comms strategy has been agreed which includes the following;

- Existing patients and families were notified direct or via phone calls, with letters and a Q&A leaflet issued. A video was also circulated that introduced the ward.
- The W&D directorate issued a comms around the wider staff base to advise of the re-opening.
- A press comms was issued on the evening of Wed 2nd March with coverage in most major Scottish news outlets the following day.
- A core brief was issued on Fri 4th to all NHS GG&C staff noting the wards reopening.
- STV will be attending site on Monday 7th March for a piece on the ward reopening.

Risk Identification			Pre-mitigation risk								Owner
1	2	3	4	5	7	8	9	10	11	12	13a
3-7	COMMERICAL CLAIM ongoing dialogue in relation to commercial claims associated with EoT 1 -9 raised by MPMH.	Additional cost implications, potential dispute.	H	H	RED	Regular engagement sessions have been set up with a view to reaching a resolution. Numerous draft final accounts have been presented to MPMH by S&D to reach agreement.	Board made aware of potential liability dependent on outcome of the claim process.	H	H	RED	NHS/MPMH

NHS Greater Glasgow and Clyde

Brookfield

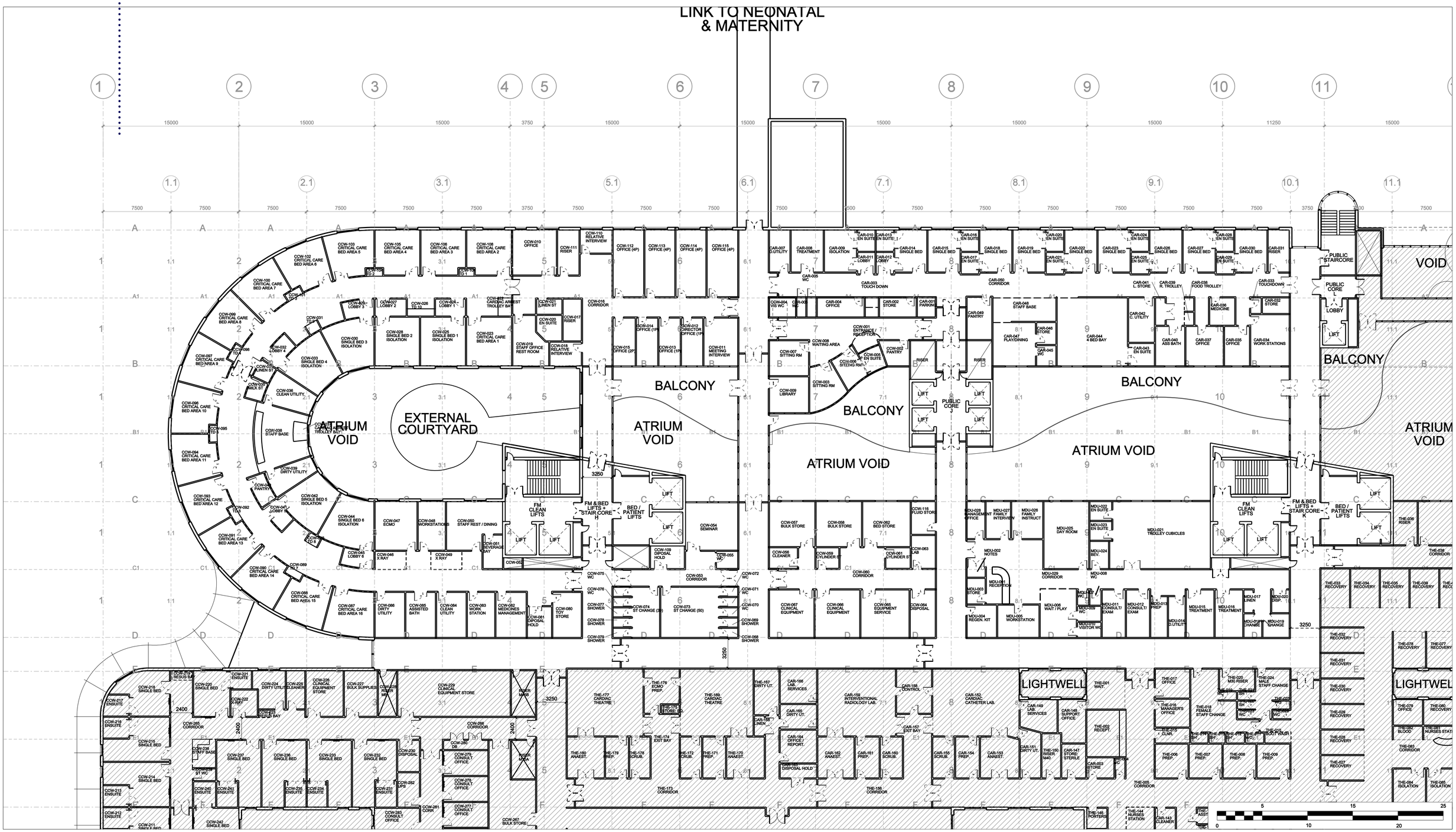
LINK TO NEONATAL & MATERNITY
ATRIUM VOID
EXTERNAL COURTYARD
BALCONY
LIGHTWELL
PUBLIC STAIRCORE
PUBLIC CORE
LIFT
FM CLEAN LIFTS
BED / PATIENT LIFTS
FM & BED LIFTS + STAIR CORE H
FM & BED LIFTS + STAIR CORE K
CCW-100 CRITICAL CARE BED AREA 7
CCW-101 TD 3
CCW-102 CRITICAL CARE BED AREA 6
CCW-103 CRITICAL CARE BED AREA 5
CCW-104 TD 2
CCW-105 CRITICAL CARE BED AREA 4
CCW-106 CRITICAL CARE BED AREA 3
CCW-107 TD 1
CCW-108 CRITICAL CARE BED AREA 2
CCW-109 TD 4
CCW-110 RELATIVE INTERVIEW
CCW-111 RISER
CCW-112 OFFICE (4P)
CCW-113 OFFICE (4P)
CCW-114 OFFICE (4P)
CCW-115 OFFICE (4P)
CCW-116 FLUID STORE
CCW-117 CARDIAC ARREST TROLLEY BAY
CCW-118 LINEN ST
CCW-119 STAFF OFFICE/ REST ROOM
CCW-120 EN SUITE
CCW-121 RELATIVE INTERVIEW
CCW-122 OFFICE (1P)
CCW-123 DIRECTOR OFFICE (1P)
CCW-124 MEETING/ INTERVIEW
CCW-125 OFFICE (2P)
CCW-126 OFFICE (1P)
CCW-127 OFFICE (1P)
CCW-128 CORRIDOR
CCW-129 LOBBY 3
CCW-130 LOBBY 2
CCW-131 TD 6
CCW-132 LOBBY 4
CCW-133 LOBBY 1
CCW-134 TD 5
CCW-135 TD 10
CCW-136 SINGLE BED 2 ISOLATION
CCW-137 SINGLE BED 1 ISOLATION
CCW-138 SINGLE BED 3 ISOLATION
CCW-139 SINGLE BED 4 ISOLATION
CCW-140 CRITICAL CARE BED AREA 1
CCW-141 CLEAN UTILITY
CCW-142 STAFF BASE
CCW-143 DIRTY UTILITY
CCW-144 LINEN ST
CCW-145 MILK ST
CCW-146 CLEANER
CCW-147 SINGLE BED 5 ISOLATION
CCW-148 SINGLE BED 6 ISOLATION
CCW-149 ECMO
CCW-150 WORKSTATIONS
CCW-151 STAFF REST / DINING
CCW-152 BEVERAGE BAY
CCW-153 LOBBY 5
CCW-154 X RAY
CCW-155 SEMINAR
CCW-156 WC
CCW-157 BULK STORE
CCW-158 BULK STORE
CCW-159 BED STORE
CCW-160 CORRIDOR
CCW-161 CYLINDER ST
CCW-162 CLEANER
CCW-163 LAB
CCW-164 DISPOSAL
CCW-165 CRITICAL CARE BED AREA 8
CCW-166 CRITICAL CARE BED AREA 9
CCW-167 CRITICAL CARE BED AREA 10
CCW-168 CRITICAL CARE BED AREA 11
CCW-169 CRITICAL CARE BED AREA 12
CCW-170 CRITICAL CARE BED AREA 13
CCW-171 CRITICAL CARE BED AREA 14
CCW-172 CRITICAL CARE BED AREA 15
CCW-173 CRITICAL CARE BED AREA 16
CCW-174 DIRTY UTILITY
CCW-175 ASSISTED BATH
CCW-176 CLEAN UTILITY
CCW-177 WORK STATION
CCW-178 MEDICINES MANAGEMENT
CCW-179 DISPOSAL HOLD
CCW-180 TOY STORE
CCW-181 SHOWER
CCW-182 WC
CCW-183 ST CHANGE (3P)
CCW-184 ST CHANGE (5P)
CCW-185 WC
CCW-186 SHOWER
CCW-187 WC
CCW-188 SHOWER
CCW-189 WC
CCW-190 SHOWER
CCW-191 WC
CCW-192 SHOWER
CCW-193 WC
CCW-194 SHOWER
CCW-195 WC
CCW-196 SHOWER
CCW-197 WC
CCW-198 SHOWER
CCW-199 WC
CCW-200 SHOWER
CCW-201 WC
CCW-202 SHOWER
CCW-203 WC
CCW-204 SHOWER
CCW-205 WC
CCW-206 SHOWER
CCW-207 WC
CCW-208 SHOWER
CCW-209 WC
CCW-210 SHOWER
CCW-211 SINGLE BED
CCW-212 ENSUITE
CCW-213 ENSUITE
CCW-214 SINGLE BED
CCW-215 SINGLE BED
CCW-216 ENSUITE
CCW-217 ENSUITE
CCW-218 ENSUITE
CCW-219 RESUS BAY
CCW-220 SINGLE BED
CCW-221 ENSUITE
CCW-222 X-RAY
CCW-223 RESUS BAY
CCW-224 DIRTY UTILITY
CCW-225 CLEANER
CCW-226 CLINICAL EQUIPMENT STORE
CCW-227 BULK SUPPLIES
CCW-228 RISER MR
CCW-229 CLINICAL EQUIPMENT STORE
CCW-230 RISER MR
CCW-231 ENSUITE
CCW-232 ENSUITE
CCW-233 SINGLE BED
CCW-234 ENSUITE
CCW-235 ENSUITE
CCW-236 SINGLE BED
CCW-237 SINGLE BED
CCW-238 STAFF BASE
CCW-239 91 WC
CCW-240 ENSUITE
CCW-241 ENSUITE
CCW-242 SINGLE BED
CCW-243 SINGLE BED
CCW-244 ENSUITE
CCW-245 ENSUITE
CCW-246 SINGLE BED
CCW-247 SINGLE BED
CCW-248 SINGLE BED
CCW-249 SINGLE BED
CCW-250 DISPOSAL
CCW-251 UPS
CCW-252 CORR
CCW-253 CONSULT OFFICE
CCW-254 CONSULT OFFICE
CCW-255 CONSULT OFFICE
CCW-256 CONSULT OFFICE
CCW-257 CONSULT OFFICE
CCW-258 CONSULT OFFICE
CCW-259 CONSULT OFFICE
CCW-260 DB
CCW-261 RISER MR
CCW-262 CORRIDOR
CCW-263 BULK STORE
CCW-264 CORRIDOR
CCW-265 CORRIDOR
CCW-266 CORRIDOR
CCW-267 BULK STORE
CCW-268 CORRIDOR
CCW-269 CORRIDOR
CCW-270 CORRIDOR
CCW-271 CORRIDOR
CCW-272 CORRIDOR
CCW-273 CORRIDOR
CCW-274 CORRIDOR
CCW-275 CORRIDOR
CCW-276 CORRIDOR
CCW-277 CORRIDOR
CCW-278 CORRIDOR
CCW-279 CORRIDOR
CCW-280 CORRIDOR
CCW-281 CORRIDOR
CCW-282 CORRIDOR
CCW-283 CORRIDOR
CCW-284 CORRIDOR
CCW-285 CORRIDOR
CCW-286 CORRIDOR
CCW-287 CORRIDOR

Department / Service	Quantity		Quantity	Size	Total		Notes
	Units			m2	m2		
NCH SoA - Version 4							***DESIGN FOR STAGE 2*** ***Reflects 240 beds with expansion for 16 beds embedded in wards etc Feb 09***
Emergency Complex							
Emergency Department					1,719		
Acute Assessment Beds							See In-patient Servcies Wards
Critical Care Transport Base					97		
					1,815		
In-Patient Services - Wards							
	beds		**Wards**				
Emergency							
Observation ward	**20**		**1.00**	**878**	**878**		Located in Emergency Complex as Generic Clusters / ward
In-Patient Beds							
24 bed Wards	**72**		**3.00**	**986**	**2,958**		83% Single Rooms in wards / clusters of 8 beds
Ward Support Accommodation			**1.00**	**1,025**	**1,025**		FM / Admin support for generic beds + family / activity etc support for all beds
Observation Room			**1.00**	**13**	**13**		Required for sleep studies in one generic ward
Scoring Room			**1.00**	**13**	**13**		Required for sleep studies in one generic ward
Nephrology/Renal - Day Case					**71**		Part of Inpatient Ward - 4 dialysis points (1 Isolation @16m2 + 3 spaces @12 +circ)
Nephrology/Renal - Bio Engineering Room					**40**		Maintenance and repair of dialysis equipment
Acute Receiving Unit	**40**		**1.00**	**1,506**	**1,506**		80% Single Rooms in wards / clusters of 8 beds
Support for Acute Receiving Unit & Shiehallion			**1.00**	**340**	**340**		
Schiehallion Ward	**22**		**1.00**	**1,108**	**1,108**		
Day Case Unit, Treatment & Base	**4**		**1.00**	**452**	**452**		
Teenage Cancer Trust	**4**		**1.00**	**193**	**193**		Needs further clarification with NHS Board and TCT
Cardiology Beds							
Cardiology Beds	**14**		**1.00**	**690**	**690**		
Additional Accommodation Cardiology			**1.00**	**99**	**99**		
Critical Care Beds	**22**		**1.00**	**2,275**	**2,275**		
Total (before Psychiatry, Day & 23 hour)	**198**				**11,661**		

Department / Service	Quantity		Quantity	Size	Total		Notes
	Units			m2	m2		
Revised Bed Complement							
As Above	198						
Neo-natal Ward	12						In Maternity Building
Add: Child Psychiatry	6						See Supplementary Schedule
Add: MDU	10						See below
Add: Day & 23 Hour Unit	30						See below
Total Beds (excl dialysis & recovery)	**256**						*Per Decisions on Bed Numbers following CHKS & March 07 Reviews*

Operating Facilities, 23 Hour Unit, CT / MRI & Interventional Radiology							
Day & 23 Hour Unit	**30**		**1.00**		**0**		Included Theatre SoA
Operating Theatres & Recovery	9 Theatres		**1.00**	**4,447**	**4,447**		Includes anaesthetic department
CT & MRI Suite	1 MRI 1 CT		**1.00**	**657**	**657**		
Cardiac Catheter & Interventional Radiology	1 Cardiac Cath 1 Intervent Radiology		**1.00**	**492**	**492**		
					5,596		

Diagnostic / Support Departments							
Radiology							
Plain Film	3						DR Technology. Chest Bucky & Skull / OPG included in 2 rooms
Ultrasound	2						
Nuclear medicine							Part of joint facility with SGH
MRI	1						Additional MRI in theatre area
Fluoroscopy - Diagnostic	1						
Interventional Radiology Lab							In theatre area
Cardiac Catheter Lab							In theatre area
Bone Mineral Densitometry	1						
Radiology Total			**1.00**	**1,730**	**1,730**		
Pharmacy (OPD Dispensing & Non Sterile Prep)					**0**		Now incorporated into a Joint dispensary with SGH
Bio Engineering & Medical Devices Library					**90**		
Medical Illustration					**100**		Provisional estimate for clinical service only
					1,920		

Department / Service	Quantity		Quantity	Size	Total		Notes
	Units			m2	m2		
Other Patient / Support Departments							
Endoscopy							Carried out in generic theatres
Cardio / Respiratory Investigation					277		Includes Case Review / Viewing
Clinical Investigations / Medical Day Unit	Chairs &				450		
Rehab Suite - Physiotherapy & Orthotics					961		Gym, Parallel Bars, Treatment, Gait Analysis, Hydrotherapy & Orthotics
Special Feeds Prep Area					82		
					1,770		
Out-Patient Services							
Fracture Clinic							Allowance included in emergency and OPD SoAs
Outpatient Services					2,486		
OPD Addition for Psychology & Liaison Psychiatry					110		Include in a main OPD cluster
Child Protection Suite	100				69		
Lung Function Suite							Area within OPD
Audiology	4 x test rooms				444		Reflects expanded service and new national standards
					3,108		
Admin & Training & Education							See 10 November 2006 Briefing Note (transfer of 1500m2 to another project)
Management Offices & Meetings Rooms					273		Very provisional (Trust Offices & Op Management)
					273		
Main Entrance / Public Areas							
Main Entrance & Reception Area					811		
					811		
FM & Staff Facilities							Requires further FM input
Main Dining Room & Servery (900 meals)					0		Shared with SGH
End Kitchen (2800 Meals)					0		Shared with SGH
Occupational health centre					0		Shared with SGH
Staff changing - manual					0		Shared with SGH (allowances for clinical staff in depts & wards)
Staff Accommodation					0		
Junior Doctors' Mess					0		
Security					0		Included in main entrance
IT & Telephone services					0		Shared with SGH
Hotel Services & Domestic / Portering					100		Includes local Domestic Equip Store, Porters Base & FM Supervisors
Clean Laundry					0		See Clean Supplies
Laundry					0		External compound
Clean Supplies Unloading Area					0		Shared with SGH
Clean Supplies / Laundry Store & Distribution					150		Very provisional for local sorting - most shared with SGH
Creche / Nursery					0		Shared with SGH
					250		

Department / Service	Quantity		Quantity	Size	Total		Notes
	Units			m2	m2		
TOTAL					**27,205**		
ALLOWANCE FOR COMMUNICATION & PLANT SPACE (29.5%)					**8,026**		Based on OBC Pref Option 18.5% commiunication and 11% plant
GROSS AREA					**35,231**		
Supplementary Schedule							
Child Psychiatry							
Dept of Child Forensic Psychology					**772**		
					772		
TOTALS OF MAIN & SUPPLEMENTARY SCHEDULES							
Main Schedule - Gross Area					**35,231**		
Child Psychiatry - Gross Area					**772**		
TOTAL GROSS AREA					**36,003**		

EMERGENCY DEPARTMENT

Description	Qty	Unit Area m²	Total Area m²	ADB CODE	Comment
Entrance, reception & waiting facilities					
Car parking spaces for people with disabilities & parents with young children	1			G0927	In circulation allowance
Ambulance parking bay	1			G0905	In circulation allowance
Main entrance draught lobby	1	11.0	11.0	J0107	
Main entrance draught lobby	1	11.0	11.0	J0112	
Parking bay: 6 wheelchairs	1	4.0	4.0	G0119	
Parking bay: 3 accident trolleys & 3 wheelchairs	1	12.0	12.0	G0128	
Reception: 2 staff	1	10.0	10.0	J0206	
Waiting area: 25 - 30 persons including 2 wheelchair users incl Play Area	1	40.5	40.5	J1116	
Waiting play area: 10 children	1	18.0	18.0	J1410	
Public telephone: single booth, accessible	1	2.0	2.0	G0705	
Refreshment: drinking water dispenser	1	0.5	0.5	P0810	
Triage Rooms	2	12	24		
WC & handwash: semi ambulant	4	2.5	10.0	V1106	
WC & handwash: accessible, wheelchair assisted	1	4.5	4.5	V0904	
Nappy change room with handwash	1	4.0	4.0	V1113	
Infant feeding room	1	5.5	5.5	S0010	
Sub-Total			**157.0**		

Assessment & Treatment Facilities (Minors Area)					
Assess & Treatment room: Paediatric, A&E	6	16.0	96.0	C0304	Open Fronted Bays with curtains Include 1 x ENT & 1 x Ophthalmic.
Infant Feeds Pantry	1	6.0	6.0		
Staff Base - 3 person	1	11.0	11.0		
WC & handwash: specimen; accessible, wheelchair	1	4.5	4.5	V1406	
Waiting area: 10 persons including 1 wheelchair user	1	25.5	25.5	J1201	
Sub-Total			**143.0**		

Assessment & Treatment Facilities (Majors Area)					
Assess & Treatment room: A&E, multi-functional	12	16.0	192.0	X0242	
Assess / Treatment with Mental Health Issues	1	11.0	11.0		
Procedures Room	3	16.0	48.0		
Treatment room: Plaster	1	16.0	16.0	X0207	
Waiting Room for Family Members	1	12.0	12.0		
WC & handwash: accessible, wheelchair assisted	1	4.5	4.5	V0904	
Staff & communication base: 5 staff	1	30.0	30.0	T0212	
Clean Utility	1	12.0	12.0	T0316	
Sub-Total			**325.5**		

Patient resuscitation facilities					
Resuscitation room: 4 places	1	116.0	116.0	X0238	
Sub-Total			**116.0**		

Distressed & bereaved persons facilities					
Sitting & body viewing room	1	16.0	16.0	S0029	
Body viewing/bier room	1	10.0	10.0	L1612	
Sub-Total			**26.0**		

Support facilities: Clinical					
Near patient testing/status laboratory	1	8.5	8.5	L1305	
Dirty utility: bedpan disposal & urine test	2	12.0	24.0	Y0311	
Parking bay: ultrasound unit	1	1.0	1.0	G0139	
Sub-Total			**33.5**		

Staff support facilities: Rest and recreation					
Rest & dining room: 35 staff	1	40.0	40.0	D0407	
Beverage / Rest Point	1	18.0	18.0		
Sub-Total			**58.0**		

Staff support facilities: Sanitary & changing					
WC & wash: ambulant	8	2.0	16.0	V1005	
Shower: ambulant (non patient)	4	2.5	10.0	V0801	
Staff changing room: 30 places	1	16.0	16.0	V0517	
Staff changing room: 50 places	1	25.0	25.0	V0515	
Sub-Total			**67.0**		

Staff support facilities: Offices					
Office: 1 staff	2	9.0	18.0	M0219	
Office: 3 staff	2	18.0	36.0	M1002	
Office: 4 staff (workstations)	3	24	72	M1014	
Interview & counselling room: 5 persons	1	9.0	9.0	M0704	
Sub-Total			**135.0**		

Staff support facilities: Education and training					
Seminar & training room: 20 persons	1	37.5	37.5	H0513	
Library & study room: 5 persons	1	18.0	18.0	H0339	
Sub-Total			**55.5**		

Support facilities: Holding & storage					
Store: equipment & supplies	1	30.0	30.0	W1320	
Medicines Management Room	1	12.0	12.0		
Store: major incident equipment	1	6.0	6.0	W1303	
Store: ready to use medical gas cylinders	1	9.0	9.0	W1313	
Sub-Total			**57.0**		

Support facilities: Miscellaneous					
Hold: disposal	1	10.0	10.0	Y0614	
Cleaners (Housekeeping) room	1	7.0	7.0	Y1501	
Switchgear room	1	4.0	4.0	K0101	
Battery & UPS room	1	9.0	9.0	K0109	
Sub-Total			**30.0**		

Total Net			**1,203.5**
Planning	**5%**		**60.2**
Sub-Total			**1,263.7**
Engineering	**3%**		**37.9**
Circulation	**33.0%**		**417.0**
Total			**1,718.6**

Critical Care Transport Base					
Ambulance bay with 32amp hook up points with sufficient space behind each vehicle space for full length ramp extension	4		0.0		external
Additional Ambulance response car space	1				external
On call staff car parking spaces adjacent to base	6				external
Secure medical gas starage	1				external
Clinical work room with preparation area and work stations; comprehensive equipment store	1	30.0	30.0		
Trolley store: accommodation for 6 intensive care trolleys/incubators	1	30.0	30.0		
Protective Clothing Store	1	6.0	6.0		
Laundry/Drying room	1	9.0	9.0		
Sub-Total			**75.0**		

Total Net			**75.0**
Planning	**5%**		**3.8**
Sub-Total			**78.8**
Engineering	**3%**		**2.4**
Circulation	**20.0%**		**15.8**
Total			**96.9**

OBSERVATION WARD

Description	Qty	Unit Area m²	Total Area m²	ADB CODE	Comment
Entrance					
Enquiry & Admin Area (Staff base)	1	8.0	8.0		
Waiting & Play Area	1	25.0	25.0		
Sub Total			**33.0**		
Bed Area					
Single bedroom: Children/young people, with relatives overnight stay	18	16.5	297.0		
Isolation single bedroom: Children/young people, with relatives overnight stay	2	16.5	33.0		
Lobby: air lock to bedroom	2	7.0	14.0		
Shower, WC & wash: accessible, wheelchair assisted	20	4.5	90.0		
Office Area with workstations	1	18.0	18.0		
Staff & communication base, enclosed: 2 staff	1	8.0	8.0		
Sub Total			**460.0**		
Utility Area					
Clean utility	1	14.0	14.0		
Cleaners Room	1	7.0	7.0		
Parking bay: resuscitation trolley	1	1.0	1.0		
Medicines Management Room	1	12.0	12.0		
Dirty utility: bedpan disposal & urine test	1	12.0	12.0		
Hold: disposal & recycling	1	12.0	12.0		
Store: linen	1	3.0	3.0		
Store: clothing back-up	1	3.0	3.0		
Store: general	1	6.0	6.0		
Bed, Cot & Equipment Store	1	20.0	20.0		
Sub Total			**90.0**		
Patient Support Area					
Parking bay:	1	5.0	5.0		
Pantry: serving ward & Regeneration & Wash Up	1	12.0	12.0		
Visitor WC	2	2.5	5.0		
Ward Food trolley parking bay	1	1.5	1.5		
WC & handwash: ambulant - staff	2	2.0	4.0		
Sub Total			**27.5**		

Total net			**610.5**
Planning	**5%**		**30.5**
Sub-Total			**641.0**
Engineering	**3%**		**19.2**
Circulation	**34.0%**		**217.9**
Grand Total			**878.2**

GENERIC WARDS
INPATIENT FLOOR (3 WARDS)

Description	Qty	Unit Area m²	Total Area m²	ADB CODE	Comment
Bed Area					
Single bedroom: Children/young people, with relatives overnight stay	20	16.5	330.0		
Lobby: air lock to bedroom	2	7.0	8.0		
Shower, WC & wash: accessible, wheelchair assisted	20	4.5	90.0		
Multi-bed room & day space: Children/young people, 4 beds, with relatives overnight stay	1	68.0	68.0		
Shower, WC & wash: accessible, wheelchair assisted	1	7.0	7.0		
Office Area with workstations (x4)	1	18.0	18.0		
Office - clinical - 2 person	1	12.0	12.0		
Staff & communication base, open 2 staff	1	5.0	5.0		
Touchdown	2	2.0	4.0		
Sub Total			**542.0**		

Utility Area					
Bath, WC & wash: treatment, assisted	1	14.0	14.0		
Clean utility	1	14.0	14.0		
Cleaners Room	1	7.0	7.0		
Parking bay: resuscitation trolley	1	1.0	1.0		
Dirty utility: bedpan disposal & urine test	1	12.0	12.0		
Store: linen & Clothing Back-up	2	2.5	5.0		
Store: general	1	5.0	5.0		
Store: equipment	1	5.0	5.0		
Sub Total			**63.0**		

Patient Support Area					
Treatment room: child	1	16.5	16.5		
Interview & counselling room: 5 persons	1	9.0	9.0		
Parking bay:	1	5.0	5.0		
Pantry: serving ward	1	12.0	12.0		
Ward Food trolley parking bay	1	1.5	1.5		
WC & handwash: ambulant - staff	1	2.0	2.0		
Sub Total			**46.0**		

Recreation, Play & Dining Area					
Dining room & Playroom: 10 - 15 patients	1	25.0	25.0		
Store Room	1	5.0	5.0		
WC & handwash: accessible, wheelchair assisted	1	4.5	4.5		
Sub Total			**34.5**		

Total Net			**685.5**
Planning	**5%**		**34.3**
Sub-Total			**719.8**
Engineering	**3%**		**21.6**
Circulation	**34.0%**		**244.7**
Total			**986.1**

SUPPORT CENTRE

Description	Qty	Unit Area m²	Total Area m²	ADB CODE	Comment
Parent / Family Facilities					
Enquiry & Admin Area	1	10.0	10.0		
Sitting room with beverage & snack preparation bay: 20 visitors	1	45.0	45.0		
WC & handwash: accessible, wheelchair assisted plus shower	1	6.0	6.0		
WC - Ambulatory	2	2.0	4.0		
Nappy change room with WC & handwash, single side table access	1	7.5	7.5		
Infant feeding room	1	5.5	5.5		
Sub Total			**78.0**		

Activity, Play & Classroom Facilities					
Supervised Play for Inpatients - (Discharge Lounge)	1	100.0	100.0		
Medicinema	1	138.0	138.0		
WC & handwash: accessible, wheelchair assisted	1	4.5	4.5		
WC - Ambulatory	2	2.0	4.0		
Sub Total			**246.5**		

Social Work					
Social Workers	1	12.0	12.0		
Sub Total			**12.0**		

Staff Facilities					
Staff Rest with beverage point	1	15.0	15.0		
Staff WC/wash	4	3.0	12.0		
Staff locker room - F	1	30.0	30.0		100 handbag lockers.
Staff locker room - M	1	10.0	10.0		30 lockers.
Staff shower	2	4.0	8.0		
Accessible shower / WC	1	4.5	4.5		Includes lockers
Sub Total			**79.5**		

Total Net			**416.0**
Planning	**5%**		**20.8**
Sub-Total			**436.8**
Engineering	**3%**		**13.1**
Circulation	**25.0%**		**109.2**
Total			**559.1**

FM & ADMINISTRATION SUPPORT FOR 72 BEDS (3 x 24 BED WARDS)

Description	Qty	Unit Area m²	Total Area m²	ADB CODE	Comment
Staff Offices, Workstations, Education & Support					
Office - 4 Person	2	24.0	48.0		
Workstations x 6	3	24.0	72.0		
Medicines Management	1	15.0	15.0		
Near patient testing/status laboratory	1	8.5	8.5		
Seminar / Education Room (15 places)	2	28.0	56.0		
Sub Total			**199.5**		
Shared FM & Other Support					
Cleaners (Housekeeping) room	1	7.0	7.0		
Disposal Hold & Recycling Point	1	20.0	20.0		
Regen Kitchen	1	30.0	30.0		
Allowance for Wash Up	1	12.0	12.0		
Clean Equipment Store	1	8.0	8.0		
Bulk Fluid Store	1	15.0	15.0		
Sub Total			**92.0**		
Bed, Cot & Equipment Store	1	55.0	55.0		
Sub Total			**55.0**		

Total Net			**346.5**
Planning	**5%**		**17.3**
Sub-Total			**363.8**
Engineering	**3%**		**10.9**
Circulation	**25.0%**		**91.0**
Total			**465.7**

Total of FM / Admin Support + Support Centre **1,024.8**

ACUTE RECEIVING UNIT (40 BEDS)

Description	Qty	Unit Area m²	Total Area m²	ADB CODE	Comments
Bed Area					
Single bedroom: Children/young people, with relatives overnight stay	32	16.5	528.0		
	2	7.0	8.0		
Shower, WC & wash: accessible, wheelchair assisted	32	4.5	144.0		
Multi-bed room & day space: Children/young people, 4 beds, with relatives overnight stay	2	68.0	136.0		
Shower, WC & wash: accessible, wheelchair assisted	2	7.5	15.0		
Office Area with workstations (x4)	1	18.0	18.0		
Office - clinical - 2 person	1	12.0	12.0		
Staff & communication base, open 2 staff	2	5.0	10.0		
Touchdown	3	2.0	6.0		
Sub Total			**877.0**		
Utility Area					
Bath, WC & wash: treatment, assisted	1	14.0	14.0		
Clean utility	1	14.0	14.0		
Cleaners Room	1	7.0	7.0		
Parking bay: resuscitation trolley	2	1.0	2.0		
Dirty utility: bedpan disposal & urine test	1	12.0	12.0		
Store: linen & Clothing Back-up	2	2.5	5.0		
Store: general	1	5.0	5.0		
Store: equipment	1	5.0	5.0		
Sub Total			**64.0**		
Patient Support Area					
Treatment room: child	2	16.5	33.0		
Interview & counselling room: 5 persons	2	9.0	18.0		
Parking bay:	1	5.0	5.0		
Pantry: serving ward	1	12.0	12.0		
Ward Food trolley parking bay	1	1.5	1.5		
WC & handwash: ambulant - staff	1	2.0	2.0		
Sub Total			**71.5**		
Younger Children's Play & Dining Area					
Dining room & Playroom: 10 - 15 patients	1	25.0	25.0		
Store Room	1	5.0	5.0		
WC & handwash: accessible, wheelchair assisted	1	4.5	4.5		
Sub Total			**34.5**		

Total Net			**1,047.0**
Planning	**5%**		**52.4**
Sub-Total			**1,099.4**
Engineering	**3%**		**33.0**
Circulation	**34.0%**		**373.8**
Total			**1,506.1**

ADDITIONAL SUPPORT ACCOMMODATION - Shiehallion & ARU

Description	Qty	Unit Area m²	Total Area m²	ADB CODE	Comments
Staff Offices, Workstations, Education & Support					
Office - 2 Person	1	12.0	12.0		
Workstations x 6	2	24.0	48.0		
Medicines Management	1	15.0	15.0		
Sub Total			**75.0**		

Shared FM & Other Support					
Disposal Hold & Recycling Point	1	10.0	10.0		
Staff Rest with beverage point	1	15.0	15.0		
Group Activity (Adolescents)	1	60.0	60.0		Supports all adolescent needs and includes office & TCT Communal Area
Data Management & BMT Compliance Office	1	18.0	18.0		
Hospital at Night Office	1	12.0	12.0		
Regeneration Kitchen & Wash up (Check with FM)	1	30.0	30.0		
WC & handwash: ambulant - staff	2	2.5	5.0		
Seminar Room	1	28.0	28.0		Schiehallion
Sub Total			**178.0**		

Total Net			**253.0**
Planning	**5%**		**12.7**
Sub-Total			**265.7**
Engineering	**3%**		**8.0**
Circulation	**25.0%**		**66.4**
Total			**340.0**

SCHIEHALLION WARD (22 BEDS)

Description	Qty	Unit Area m²	Total Area m²	ADB CODE	Comments
Bed Area					
Single bedroom: Children/young people, with relatives overnight stay	21	16.5	346.5		
Lobby: air lock to bedroom	8	7.0	56.0		
Shower, WC & wash: accessible, wheelchair assisted	21	4.5	94.5		
Office Area with workstations (x4)	1	18.0	18.0		
Office - clinical - 2 person	1	12.0	12.0		
Staff & communication base, open 2 staff	1	5.0	5.0		
Touchdown space	2	2.0	4.0		
Sub Total			**532.0**		

Utility Area					
Bath, WC & wash: treatment, assisted	1	14.0	14.0		
Clean utility	1	14.0	14.0		
Cleaners Room	1	7.0	7.0		
Parking bay: resuscitation trolley	1	1.0	1.0		
Dirty utility: bedpan disposal & urine test	1	12.0	12.0		
Store: linen & Clothing Back-up	2	2.5	5.0		
Store: general	1	5.0	5.0		
Store: equipment	1	5.0	5.0		
Sub Total			**63.0**		

Patient Support Area					
Treatment room: child	1	16.5	16.5		
Chemotherapy Room	1	12.0	12.0		
School Room	1	18.0	18.0		
Play Room	1	25.0	25.0		
Store Room	1	5.0	5.0		
Interview & counselling room: 5 persons	2	11.0	22.0		
Parking bay:	1	5.0	5.0		
Pantry: serving ward	1	12.0	12.0		
Ward Food trolley parking bay	1	1.5	1.5		
WC & handwash: ambulant - staff	1	2.0	2.0		
Sub Total			**119.0**		

Radiotherapy Treatment Suite					
Radiation shielded patient bedroom	1	20.0	20.0		Part of overall Schiehallion bed complement (22)
Radiation shielded toilet/shower (and drain)	1	4.5	4.5		
Secure shielded ante-room for storage of radioisotope/radioactive injection rig/radioactive waste	1	10.0	10.0		
Radiation shielded controlled lobby	1	6.0	6.0		
Adjoining relatives bed space	1	10.0	10.0		
Ensuite bathroom for relatives	1	6.0	6.0		
Sub Total			**56.5**		

External play area including covered area	1		**0.0**		
Sub Total			**0.0**		External Area

Total Net			**770.5**
Planning	**5%**		**38.5**
Sub-Total			**809.0**
Engineering	**3%**		**24.3**
Circulation	**34.0%**		**275.1**
Total			**1,108.4**

DAY CASE UNIT (Incl Treatment) & Staff Base

Description	Qty	Unit Area m²	Total Area m²	ADB CODE	Comments
Day Unit					
Reception	1	5.0	5.0		
Waiting/Play area	1	20.0	20.0		
Consult/Exam/Treatment Room	4	16.5	66.0		Note specific requirements in Operational Policy
Haemophilia Unit Consult/Exam/Treatment Room	1	16.5	16.5		
Haemophilia Unit Office (2 Person)	1	12.0	12.0		Co-located with Haemophilia/Consult/Exam/Treatment room
Day Stay Ward	1	68.0	68.0		
Patient WC	2	2.5	5.0		Ensuite to Day Stay Ward
Disabled WC	1	4.5	4.5		
Patient WC	1	2.5	2.5		
BMT Waiting Area	1	9.0	9.0		FACT-JACIE requirement
BMT Day Stay Ward	1	36.0	36.0		
Store: linen & Clothing Back-up	1	2.5	2.5		
Store: general	1	5.0	5.0		
Clean Utility	1	14.0	14.0		
Dirty utility: bedpan disposal & urine test	1	12.0	12.0		
Managers Office	1	9.0	9.0		
Interview Room	1	9.0	9.0		
Office Area with workstations (x4)	1	18.0	18.0		
Sub Total			**314.0**		

Total Net			**314.0**
Planning	**5%**		**15.7**
Sub-Total			**329.7**
Engineering	**3%**		**9.9**
Circulation	**34.0%**		**112.1**
Total			**451.7**

TEENAGE CANCER TRUST

Description	Qty	Unit Area m²	Total Area m²	ADB CODE	Comments
Teenage Cancer Trust Accomodation					Adjacent to Shiehallion Ward
Single bedroom: Children/young people, with relatives overnight stay	4	16.5	66.0		
Shower, WC & wash: accessible, wheelchair assisted	4	4.5	18.0		(As per HBN 04-01)
Contingency	1	50.0	50.0		
Sub Total			**134.0**		

Total Net			**134.0**
Planning	**5%**		**6.7**
Sub-Total			**140.7**
Engineering	**3%**		**4.2**
Circulation	**34.0%**		**47.8**
Total			**192.8**

CARDIOLOGY (14 BEDS)

Description	Qty	Unit Area m²	Total Area m²	ADB CODE	Comments
Bed Area					
Single bedroom: Children/young people, with relatives overnight stay	10	16.5	165.0		
Lobby: air lock to bedroom	2	7.0	14.0		
Shower, WC & wash: accessible, wheelchair assisted	10	4.5	45.0		
Multi-bed room & day space: Children/young people, 4 beds, with relatives overnight stay	1	68.0	68.0		
Shower, WC & wash: accessible, wheelchair assisted	1	7.0	7.0		
Office Area with workstations (x4)	1	18.0	18.0		
Office - clinical - 2 person	1	12.0	12.0		
Clinical Workstations (x6)					
Staff & communication base, open 2 staff	1	5.0	5.0		
Touchdown	1	2.0	2.0		
Sub Total			**336.0**		
Utility Area					
Bath, WC & wash: treatment, assisted	1	14.0	14.0		
Clean utility	1	14.0	14.0		
Cleaners Room	1	7.0	7.0		
Parking bay: resuscitation trolley	1	1.0	1.0		
Dirty utility: bedpan disposal & urine test	1	12.0	12.0		
Store: linen & Clothing Back-up	1	3.0	3.0		
Store: general	1	5.0	5.0		
Store: equipment	1	5.0	5.0		
Sub Total			**61.0**		
Patient Support Area					
Treatment room: child	1	16.5	16.5		
Interview & counselling room: 5 persons	1	9.0	9.0		
Parking bay:	1	5.0	5.0		
Pantry: serving ward	1	12.0	12.0		
Ward Food trolley parking bay	1	1.5	1.5		
WC & handwash: ambulant - staff	2	2.0	4.0		
Sub Total			**48.0**		
Recreation, Play & Dining Area					
Dining room & Playroom: 10 - 15 patients	1	25.0	25.0		
Store Room	1	5.0	5.0		
WC & handwash: accessible, wheelchair assisted	1	4.5	4.5		
Sub Total			**34.5**		

Total Net			**479.5**
Planning	**5%**		**24.0**
Sub-Total			**503.5**
Engineering	**3%**		**15.1**
Circulation	**34.0%**		**171.2**
Total			**689.8**

ADDITIONAL ACCOMMODATION - Cardiology

Staff Offices, Workstations, Education & Support					
Office - 2 Person	1	12.0	12.0		
Workstations x 6	1	24.0	24.0		
Medicines Management	1	8.0	8.0		
Sub Total			**44.0**		

Shared FM & Other Support					
Cleaners (Housekeeping) room					
Disposal Hold & Recycling Point	1	10.0	10.0		
Regen Kitchen & Wash Up Allowance	1	12.0	12.0		
Clean Equipment & Fluid Store	1	8.0	8.0		
Sub Total			**30.0**		

Total Net			**74.0**
Planning	**5%**		**3.7**
Sub-Total			**77.7**
Engineering	**3%**		**2.3**
Circulation	**25.0%**		**19.4**
Total			**99.5**

CRITICAL CARE

Description	Qty	Unit Area m²	Total Area m²	ADB CODE	Comment
Entrance/Reception/Administration facilities			0.0		
Combined entrance	1		0.0		In circulation allowance
Visitors Foyer	1		0.0		In circulation allowance
Visitors waiting area:	1	15.0	15.0		
Visitors wc: Disabled/ wheelchair user	1	4.5	4.5		
Telephone area: single booth; low height	1	2.0	2.0		
Reception desk/office: 4 places					
Sub-Total			**21.5**		
Family & Friends facilities (adjacent to main entrance)			0.0		
Private (single) Family Sitting	2	10.0	20.0		
Relatives en-suite wc: Disabled/ wheelchair user	1	4.5	4.5		For 1 of the above rooms
Relatives sitting room: 12 places	1	16.0	16.0		
Relatives pantry/beverage bay	1	6.0	6.0		
Sub-Total			**46.5**		
Clinical areas			0.0		
Critical care bed area: single room; Isolation (access via gowning lobby)	6	25.5	153.0		
Gowning lobby: single bedroom	6	7.0	42.0		
Relatives interview room	2	9.0	18.0		close to 4 bed areas
Critical care bed area:	16	25.5	408.0		
Workstation & X-ray Viewing Area	2	12.0	24.0		
Central Communications / Staff Base + Reception	1	34.0	34.0		
Communications "Touch down bases"	11	2.0	22.0		(as per HBN 04-01) (1 per 2 rooms)
Sub-Total			**701.0**		
Utility/clinical area support facilities			0.0		
Clean utility (including blood bank area)	2	17.0	34.0		
Status laboratory	1	8.5	8.5		
Dirty utility with urine testing	1	12.0	12.0		
Dirty Utility with urine testing/equipment cleaning	1	18.0	18.0		
Disposal hold	2	10.0	20.0		
Housekeepers (cleaners) room	1	10.0	10.0		
Patients pantry	1	6.0	6.0		
Milk store	1	4.0	4.0		
Play Leader Base & Toy Store	1	16.0	16.0		
Medicines Management Room	1	18.0	18.0		
ECMO Prep Area + Ensuite Store & Office	1	24.0	24.0		
Patients assisted bathroom, wc & wash (Stretcher hoist)	1	16.0	16.0		
Sub-Total			**186.5**		
Storage/holding facilities			0.0		
Bulk supplies store	2	25.0	50.0		
Clinical equipment store	2	25.0	50.0		
Equipment service room	1	24.0	24.0		
Linen bay/store	2	4.0	8.0		
Furniture / Bed Store	1	20.0	20.0		
Ready use medical gas cylinders store	2	4.0	8.0		
Mobile imaging equipment bay (x-ray & Ultrasound) with image intensifiers	2	8.0	16.0		
Cardiac arrest/emergency trolley bay	2	3.0	6.0		
Sub-Total			**182.0**		

CRITICAL CARE

Staff facilities			0.0		
Clinical directors office: 1 place	1	12.0	12.0		
Office: 1 place	2	12.0	24.0		
Offices: 2 place	1	13.0	13.0		
Clinical staff office: 4 places	5	24.0	120.0		
Hot Desk Room / Library	1	18.0	18.0		
Meeting room/interview room (8 person)	1	20.0	20.0		
Staff rest room with dining area	1	30.0	30.0		
Staff snack/beverage preparation bay	1	8.0	8.0		
Staff changing facilities 30 places	1	15.0	15.0		
Staff changing facilities 50 places	1	25.0	25.0		
Staff shower	5	2.5	12.5		
Staff wc & wash: Ambulant user	5	2.0	10.0		
Seminar/training room: 25 places	1	30.0	30.0		
Staff office/restroom	1	13.0	13.0		
Staff office/restroom en-suite shower, wc & wash	1	5.0	5.0		
Sub-Total			**355.5**		

Engineering facilities			0.0		
Switchgear cupboard	2	2.0	4.0		
Battery/UPS room	2	9.0	18.0		
Sub-Total			**22.0**		

Total Net			**1515.0**
Planning	**5%**		**75.8**
Sub-Total			**1,590.8**
Engineering	**3%**		**47.7**
Circulation	**40.0%**		**636.3**
Total			**2,274.8**

OPERATING THEATRES

Description	Qty	Unit Area m²	Total Area m²	ADB CODE	Comment
Main Entrance/Reception Area					
Entrance Foyer	1	0.0	0.0		In circulation allowance
Reception, administration office & communication base: 4 staff	1	24.0	24.0		
Manager's Office	1	12.0	12.0		
Offices - 2 person	1	13.0	13.0		
Waiting & Play Area (unsupervised)	1	20.0	20.0		
Sub Total			**69.0**		
Multifunction Area (Pre-op Assess & AODOS)					
Nurses Station	1	8.0	8.0		
Duty porters area: 2 porters	1	5.0	5.0		
WC & handwash: accessible, wheelchair assisted	2	4.5	9.0		
Nappy Change	1	6.0	6.0		
Assessment/Pre-op/Changing Rooms (With couch)	4	14.0	56.0		
Assessment/Pre-op/Changing Rooms (With chair)	4	7.0	28.0		
Clothes Store Trolley Area	1	4.0	4.0		Lockable space for 2 x "patient/carer baggage trolleys" prior to their transfer to wards)
Pre-op Playroom (supervised)	1	45.0	45.0		Should be sub-dividable to support children with challenging behaviours
Playroom Store	1	6.0	6.0		En-suite to playroom
Adolescent's Mess Room	1	30.0	30.0		
Holding Area	2	13.5	27.0		
Cleaners (Housekeepers room)	1	7.0	7.0		
Sub Total			**231.0**		
Operating Theatre Entrance/Exit/Interface Area					
Lobby	1	12.0	12.0		
Additional Waiting Parking Area For Theatre Trolleys (4-5 empty trolleys)	1	10.0	10.0		
Sub Total			**22.0**		
Operating theatre suites facilities					
Operating theatre: general	4	55.0	220.0		
Operating theatre: ultra clean	3	55.0	165.0		
Operating Theatre - cardiac	2	63.0	126.0		
ECMO Prep Area + Ensuite Store	1	20.0	20.0		Accessible from both cardiac theatres
Anaesthetic room: bed space	9	19.0	171.0		
Scrub-up & gowning room	9	11.0	99.0		
Preparation room	9	12.0	108.0		
Exit/parking bay: theatre, 1 bed/trolley	9	12.0	108.0		
Store: equipment, local to theatre	5	2.0	10.0		1 between 2 theatres
Dirty utility: serving 2 theatres	4	14.0	56.0		1 between 2 theatres
Dirty utility: serving 1 theatre	1	12.0	12.0		
Offices - 2 person	2	13.0	26.0		Located within clinical areas to support management of the operating theatre/recovery function
WC & wash: ambulant	4	2.0	8.0		Servicing Theatres & Reception/Recovery
Sub Total			**1129.0**		

Reception/Recovery Unit Facilities					
Reception/Recovery bay: post anaesthetic, 1 place	18	13.5	243.0		
Recovery room: post anaesthetic, 1 place	3	16.5	49.5		
Nurses Station	1	8.0	8.0		
Charge Nurse/Sister's Office	1	9	9.0		
Clean utility	1	14.0	14.0		
Dirty utility: bedpan disposal & urine test	1	12.0	12.0		
Cleaners Room	1	7.0	7.0		
Sub Total			**342.5**		

Post Acute Recovery (23 hour ward)					
Clean Store & Utility	1	14.0	14.0		
Dirty Utility	1	8.0	8.0		
Store Room	1	8.0	8.0		
Linen Room	1	4.0	4.0		
Disposal Hold	1	8.0	8.0		
Cleaners Room	1	7.0	7.0		
Parents Changing Room (With WC & Shower) (Disabled access)	1	6.0	6.0		
Parents Room	1	22.0	22.0		
Parents pantry/beverage bay	1	6.0	6.0		en-suite to Parents room
Pantry/Beverage Area with Re-gen Area	1	16.0	16.0		
Staff Base	1	8.0	8.0		
Offices - 2 person	1	13.0	13.0		
Single Rooms	10	16.5	165.0		
Patients en-suite with chamfered shower as per HBN 00-02	10	4.5	45.0		En-suite to single rooms
4 Bed Bay	3	73.0	219.0		
En-suite WC, Wash & Shower	3	7.0	21.0		1 per 4 bed bay
Trolley Bay (8 trolley cubicles)	1	78.0	78.0		Forms part of the total ward of 20 beds / trolleys
En-suite WC, Wash & Shower	1	7.0	7.0		
Discharge Lounge for Adolescents & Young People	1	20.0	20.0		
Step Down Playroom (supervised)	1	35.0	35.0		
Staff WC	2	2.0	4.0		
WC - Disabled	1	4.5	4.5		
Sub Total			**718.5**		

Support facilities					
Office: medical reporting, 1 staff	1	10.5	10.5		
Blood bank refrigerator bay	1	3.0	3.0		
Near patient testing/status laboratory	1	8.5	8.5		
Store room: flexible endoscope	1	10.0	10.0		Equiped with endoscope storeage cabinets to support daily scope requirements
Generic Laboratory	1	16.0	16.0		
Service room: equipment	1	21.0	21.0		
Parking bay: mobile x-ray & ultrasound unit	2	5.0	10.0		
Parking bay: resuscitation trolley	1	1.0	1.0		
Parking bay: fibre optic bronchoscope light source trolley	1	1.0	1.0		
Store: satellite pharmacy	1	6.0	6.0		
Store: bulk supplies	3	35.0	105.0		
Store: clinical equipment	2	30.0	60.0		
Store: linen	1	6.0	6.0		
Store: ready to use medical gas cylinders	1	4.0	4.0		
Hold: disposal	1	15.0	15.0		
Cleaners (Housekeeping) room	1	7.0	7.0		
Switchgear room	1	4.0	4.0		
UPS & IT hub room	1	9.0	9.0		
Sub Total			**297.0**		

Staff support facilities					
Rest & dining room with beverage & snack preparation bay: 40 staff	1	56.0	56.0		include 6 IT points (NOT workstations)
Workstations (6)	1	24.0	24.0		Immediately adjacent to rest/dining area and joined by a flexible partition to allow whole area to be "opened up"
Utility: footwear washing	1	4.0	4.0		
Staff changing room including boot change: 40 places	1	20.0	20.0		Male staff
Staff changing room including boot change: 70 places	1	35.0	35.0		Female staff
WC & wash: ambulant	4	2.0	8.0		
WC & handwash: accessible, wheelchair assisted	1	4.5	4.5		
Shower: ambulant (non patient)	5	2.5	12.5		
Interview/meeting room: 8 persons	1	18.0	18.0		
Seminar room: 30 persons	1	55.0	55.0		
Library & study room: 10 persons	1	30.0	30.0		
Sub Total			**267.0**		

Anaesthetic Department Facilities					
Clinical Director's Office	1	14.0	14.0		
Office: 2 staff	9	13.0	117.0		
Office: 2 staff	1	13.0	13.0		
Office: 8 staff	1	40.0	40.0		
Office - Pain Team	1	15.0	15.0		
WCs	2	2.0	4.0		
WC - Disabled	1	4.5	4.5		
Store: general & stationery	2	9.0	18.0		
Cleaners Room	1	7.0	7.0		
Sub Total			**232.5**		

Total Net			**3308.5**
Planning	**5%**		**165.4**
Sub-Total			**3,473.9**
Engineering	**3%**		**104.2**
Circulation	**25.0%**		**868.5**
Total			**4,446.6**

CT, MRI and INTERVENTIONAL SUITE

Description	Qty	Unit Area m²	Total Area m²	ADB CODE	Comment
Cross-sectional Imaging facilities: CT					
Sub-waiting area: 5 places, incl. 1 wheelchair place	1	9.0	9.0		
Assisted patient changing cubicle	1	3.5	3.5		
Patients/staff belongings locker bay	1	2.0	2.0		
Anaesthetic Room/Minor procedures room	1	19.0	19.0		
CT scanner room	1	40.0	40.0		
Lead apron & protection gear holding area	2	0.5	1.0		
Counselling/interview room: 5 places	1	9.0	9.0		
Control Room	1	16.0	16.0		
Radiologists Office / Reporting area	1	8.0	8.0		
CT Prep Room (Clean Utility)	1	14.0	14.0		
Dirty Utility	1	9.0	9.0		
Sub Total			**130.5**		

Cross-sectional Imaging facilities: MRI					
Non Controlled Area:					
Sub-waiting area: 5 places, incl. 1 wheelchair place	1	9.0	9.0		
Interview & Patient / Staff locker bay	1	9.0	9.0		
Trolley / Transfer Area to MRI Compatible Trolley	1	16.0	16.0		
Dirty Utility	1	9.0	9.0		
Controlled Area:					
Controlled Lobby			0.0		In circulation allowance
Anaesthetic Room	1	19.0	19.0		NB If located within controlled area will need to be spec'd accordingly
Ambulant Changing Cubicle	1	1.5	1.5		
Assisted patient changing cubicle	1	4.5	4.5		
Visitors & patients wc: Disabled/ wheelchair user - asstd	1	4.5	4.5		
MRI scanner engineering/technical room	1	24.0	24.0		
MRI scanner room (3 Tesla):	1	84.0	84.0		
Cleaners' room with non-ferromagnetic equipment/materials	1	7.0	7.0		
Image Review / Analysis Workstation Room	1	8.0	8.0		
Prep & Store Room (Clean Utility)	1	14.0	14.0		
Control Room	1	20.0	20.0		Includes safety records and slave anaesthetic monitors
Sub Total			**229.5**		

Shared facilities: CT & MRI & Interventional Labs					
Sub-reception/administration/records area: 2 reception & 2 workstation position	1	16.0	16.0		
Waiting area: 15 places, incl. 2 wheelchair places	1	25.0	25.0		
Allowance for children wait / play	1	15.0	15.0		
Drinking water dispenser	1	0.5	0.5		
Supt Office (2 person)	1	15.0	15.0		
WC Ambulant Asstd	1	2.5	2.5		
Visitors & Patients WC - disabled / wheelchair user - asstd	1	4.5	4.5		
Patients bed/trolley sub-waiting area: 4 places	1	20.0	20.0		include medical gases - patients may be from critical care or ED & have to wait etc
Cleaners Room	1	7.0	7.0		
Store Rooms	2	6.0	12.0		
Sub Total			**117.5**		

Total Net			**477.5**
Planning	**5%**		**23.9**
Sub-Total			**501.4**
Engineering	**3%**		**15.0**

Circulation	**28.0%**		**140.4**
Total			**656.8**

INTERVENTIONAL RADIOGRAPHY AND ANGIOGRAPHY SUITE

Description	Qty	Unit Area m²	Total Area m²	ADB CODE	Comment
Interventional Radiology & Angiography Suite					
Store room (linen)	1	2.0	2.0		
Disposal Hold	1	6.0	6.0		Also used bty CT / MRI
Dirty utility	2	12.0	24.0		En-suite to labs
Prep Rooms - en-suite to Labs	2	12.0	24.0		ensuite to labs
Interventional Radiology laboratory	1	65.0	65.0		
Cardiac Catheter (Biplane) laboratory + Theatre Set Up / Capacity	1	75.0	75.0		
Control room - shared	1	20.0	20.0		
Catheter (angiography) laboratory computer/engineering services room	2	16.0	32.0		
Scrub-up/gowning room: 3 places	2	11.0	22.0		ensuite to labs
Anaesthetic room	2	19.0	38.0		ensuite to labs
Patient bed/trolley theatre exit bay parking bay: 1 place	2	12.0	24.0		
Interventional Sterile Supplies Storage Area	1	10	10		
Office / Reporting - 4 stations	1	16	16		
Sub Total			**358.0**		

Total Net			**358.0**
Planning	**5%**		**17.9**
Sub-Total			**375.9**
Engineering	**3%**		**11.3**
Circulation	**28%**		**105.3**
Total			**492.4**

RADIOLOGY - MAIN DEPT

Description	Qty	Unit Area m²	Total Area m²	ADB CODE	Comment
Main entrance, reception & waiting facilities					
Wheelchair parking bay: 6 wheelchairs	1	4.0	4.0		
Reception/appointments desk: 3 position	1	15.0	15.0		
Central waiting area: 55 places, incl. 3 wheelchair places	1	88.0	88.0		
Staff Base (Near A&E and OPD Entrances)	1	16.0	16.0		
Trolley Wait - 4 positions	1	20.0	20.0		
Resus Bay	1	1.0	1.0		
Paeds waiting area & play area	1	15.0	15.0		
Visitors & patients wc: Ambulant user	2	2.5	5.0		
Visitors & patients wc: Disabled/ wheelchair user	1	4.5	4.5		
Porters room: 2 person (enclosed)	1	5.0	5.0		
Staff WC	2	2.5	5.0		
Disposal Hold	1	10.0	10.0		
Cleaners Room	1	7.0	7.0		
Equipment store	1	12.0	12.0		
Baby/infant feeding room	1	6.0	6.0		
Sub Total			**213.5**		

General x-ray imaging facilities					
Ambulant patients pass through changing cubicle	3	2.5	7.5		
Disabled/wheelchair patients pass through changing cubicle	1	4.5	4.5		
Bone mineral densitometry imaging room incl. control area	1	18.0	18.0		
General computed radiography x-ray room incl. control cubicle	3	40.0	120.0		
Store Room	1	8.0	8.0		
Computed radiography imaging film processing/ viewing area serving 3 exam rooms	1	30.0	30.0		
Clean Utility	1	12.0	12.0		
Dirty Utility	1	9.0	9.0		
Linen Trolley Bay	1	2.0	2.0		
Sub Total			**211.0**		

Ultrasound imaging facilities					
Visitors & patients wc: Disabled/ wheelchair user	1	4.5	4.5		
Ambulant patients changing cubicle	2	1.5	3.0		
Disabled/wheelchair patients changing cubicle	1	3.5	3.5		
Patients belongings locker bay: 12 lockers	1	1.5	1.5		
General Ultrasound examination room	2	16.0	32.0		
Patients en-suite wc: Disabled/ wheelchair user	1	4.5	4.5		
Counselling/interview room: 5 places	1	16.0	16.0		*Also identified as "soft" expansion for future 3rd U/S)
Store Room	1	6.0	6.0		
Clean Utility	1	12.0	12.0		(Shared with fluroscopy)
Dirty Utility	1	9.0	9.0		(Shared with fluroscopy)
Linen Trolley Bay	1	2.0	2.0		(Shared with fluroscopy)
staff reception	1	11.0	11.0		(Shared with fluroscopy)
Sub Total			**105.0**		

Fluoroscopy & fluorography diagnostic imaging facilities					
Ambulant patients changing cubicle	1	1.5	1.5		
Disabled/wheelchair patients changing cubicle	1	3.5	3.5		
Patients belongings locker bay: 4 lockers	1	0.5	0.5		
Lead apron & protection gear holding area	1	0.5	0.5		
Universal or remote fluoroscopy room incl. control area	1	40.0	40.0		
Computed radiography imaging film processing/viewing area	1	15.0	15.0		
Patients en-suite wc: Disabled/ wheelchair user	1	4.5	4.5		
Store Room	1	6.0	6.0		
Sub Total			**71.5**		
Offices, Reporting & Admin facilities					
Manager / CD	1	14.0	14.0		
Consultant Office - 2 person	5	13.0	65.0		
Senior radiographers office: 3 place	3	15.0	45.0		
Radiologists Communal Reporting area:	1	48.0	48.0		6 to 8 positions
Lead clinician's room	1	16.0	16.0		2 positions
Image Analysis Laboratory & Reporting Room	1	26.0	26.0		near to MRI
Head of Paediatric Clinical Physics	1	13.0	13.0		with meetings area
Secretairal / Admin office:	1	30.0	30.0		
Office supplies store	1	6.0	6.0		
Radiographer's reporting room	1	18.0	18.0		
Photocopy room / Store	1	6.0	6.0		
Sub Total			**287.0**		

Whole Department: Staff facilities					
Staff wc & wash: Ambulant user	2	2.5	5.0		
Staff wc: Disabled/wheelchair user	1	4.5	4.5		
Staff shower	2	2.5	5.0		Split M:F
Staff Lockers	1	18.0	18.0		Split M:F
Seminar room: 20 places	1	35.0	35.0		Equiped with 4 workstations. (En-suite to hot desk/staff support to allow whole area to be "opened up" into an 80m2 space
Hot Desk/Staff Support Area (6 x workstations)	1	45.0	45.0		With 50/50 split via temporary partition between workstation and support area
Sub Total			**112.5**		

MRI Suite					
Non Controlled Area:					
Sub-reception/administration/records area	1	11.0	11.0		
Sub-waiting area / patient familiarisation / Simulator	1	26.0	26.0		
Interview & Patient / Staff locker bay	1	9.0	9.0		
Trolley / Transfer Area to MRI Compatible Trolley	1	16.0	16.0		Also supports secondary function as an infrequent "recovery area"
WC - Disabled	1	4.5	4.5		
Clean Utility	1	12.0	12.0		May be shared with ultrasound/fluro if design allows

Dirty Utility	1	9.0	9.0		May be shared with ultrasound/fluro if design allows
Linen Trolley Bay	1	2.0	2.0		May be shared with ultrasound/fluro if design allows
Controlled Area:					
Controlled Lobby	0	17.0	0.0		In circulation allowance
Ambulant Changing Cubicle	1	1.5	1.5		
Assisted patient changing cubicle	1	3.5	3.5		
Visitors & patients wc: Disabled/ wheelchair user - asstd	1	4.5	4.5		
MRI scanner engineering/technical room	1	24.0	24.0		
MRI scanner room (3 Tesla):	1	84.0	84.0		Size varies 65m2 to 84m2 according to position of room and if some of field is external to building and access restricted. Access to install / remove magnet is critical to design - identify exterrnal wall (panels?)
Cleaners' room with non-ferromagnetic equipment/materials	1	7.0	7.0		
Image Review / Analysis Workstation Room	1	8.0	8.0		
Patient Prep & Store Room	1	16.0	16.0		
Feed/sleep area	1	9.0	9.0		Transferred from CT & MRI Schedule
Control Room	1	20.0	20.0		Includes safety records and slave anaesthetic monitors
Sub Total			**267.0**		

Total Net			**1,267.5**
Planning	**5%**		**63.4**
Sub-Total			**1,330.9**
Engineering	**3%**		**39.9**
Circulation	**27%**		**359.3**
Total			**1,730.1**

CARDIOLOGY TESTING

Description	Qty	Unit Area m²	Total Area m²	ADB CODE	Comment
Testing Area					
Sub-reception: 1 position	1	8.0	8.0		
Sub-waiting area: 10 places, incl. 2 wheelchair	1	16.0	16.0		
Drinking water dispenser	1	0.5	0.5		
Patient Trolley / Chairs Bay	1	8.0	8.0		
Visitors & patients wc: Disabled/ wheelchair user	1	4.5	4.5		
Physical measurement bay	1	3.5	3.5		
Echocardiography room	3	18.0	54.0		
Exercise ECG room:	2	16.0	32.0		
Other Testing / Consult	2	16.0	32.0		Including Holter Tape
Sterile supplies store	1	6.0	6.0		
Equipment store	1	4.0	4.0		
Sub Total			**168.5**		

Case Conference / Pre Op Reviews					
Meetings / Seminar Room	1	30.0	30.0		With Audio-Visual equip
Sub Total			**30.0**		

Total Net			**198.5**
Planning	**5%**		**9.9**
Sub-Total			**208.4**
Engineering	**3%**		**6.3**
Circulation	**30%**		**62.5**
Total			**277.2**

CLINICAL INVESTIGATION/ MEDICAL DAY UNIT

Description	Qty	Unit Area m²	Total Area m²	ADB CODE	Comment
Entrance and Reception					
Reception & Nurse Base - 2 position	1	10.0	10.0		
Workstation Area - 4 positions	1	16.0	16.0		
Manager's Office	1	9.0	9.0		Opens into workstation / reception area
Waiting & Play Area	1	24.0	24.0		
Visitors wc: Ambulant user	1	2.5	2.5		
Visitor / Patients wc: Disabled/ wheelchair user	1	4.5	4.5		
Sub Total			**66.0**		
Patient investigation & treatment spaces					
Consulting/examination room: dual sided couch access	2	13.5	27.0		With med gas
Prep Room / Clean Store	1	8.0	8.0		
Treatment room	2	16.0	32.0		With Med Gas.
Dirty utility	1	9.0	9.0		
Day Room (8 chairs)	1	36.0	36.0		With Med gas for 8 chairs.
Ensuite	2	4.5	9.0		
Patient trolley area - 10 trolley cubicles	1	80.0	80.0		With Med gas and parent's chair for each trolley space
Sub Total			**201.0**		
Other areas					
Family Interview room	1	11.0	11.0		
Family Instruction / Staff Training Room	1	14.0	14.0		with clinical WHB
Beverage preparation bay	1	6.0	6.0		
Sub Total			**31.0**		
Sanitary facilities					
Staff WC	1	2.0	2.0		
Staff Lockers & change	2	5.0	10.0		
Patients wc: Disabled/ wheelchair user	1	4.5	4.5		
Sub Total			**16.5**		
Support spaces					
Resuscitation trolley parking bay: 1 trolley	1	1.0	1.0		
Notes Cupboard	1	2.0	2.0		
General store	1	4.0	4.0		
Disposal hold	1	6.0	6.0		
Linen Cupboard	1	2.0	2.0		
Sub Total			**15.0**		

Total Net			**329.5**
Planning	**5%**		**16.5**
Sub-Total			**346.0**
Engineering	**3%**		**10.4**
Circulation	**27%**		**93.4**
Total			**449.8**

REHABILITATION: THERAPY & ORTHOTICS

Description	Qty	Unit Area m²	Total Area m²	ADB CODE	Comment
Entrance & Waiting					
Sub-reception: 1 position	1	8.0	8.0		
Sub-waiting area: 20 places, incl. 2 wheelchair places	1	32.0	32.0		
Drinking water dispenser	1	0.5	0.5		
Social Work	1	12	12		
Visitors & patients wc: Ambulant user	2	2.5	5.0		
Allowance for Classroom(s) & Assoc Accomm	1	80.0	80.0		
Visitors & patients wc: Disabled/ wheelchair user	1	4.5	4.5		
Sub Total			**142.0**		
Hydotherapy Pool					
Staff base: 2 staff	1	6.0	6.0		
Waiting area: 3 persons including 1 wheelchair user	1	6.0	6.0		
Patient changing room with cubicles, 6 places, ambulant persons	1	12.0	12.0		
WC dual access & handwash: accessible, wheelchair assisted	1	5.5	5.5		
Hydrotherapy pool	1	30.0	30.0		
Store: equipment, hydrotherapy pool & cleaning	1	5.0	5.0		
Hydrotherapy: laundry & utility room	1	6.0	6.0		
Sub Total			**70.5**		
Therapy Treatment & Orthotics					
Small Gymnasium (Equipment Room)	1	24.0	24.0		
ADL Kitchen (small)	1	22.0	22.0		
Flexible Treatment / Consult Rooms	10	12.0	120.0		
Consult / Exam / Exam (Single Sided)	2.0	13.5	27.0		
Treatment - large	1	16.0	16.0		
Store: exercise equipment, activity area	1	6.0	6.0		
Store: exercise equipment, therapy treatment cubicles	1	6.0	6.0		
Therapy Room	1	14.0	14.0		
Group Teaching Room	1	15.0	15.0		
Machine Room	1	25.0	25.0		
Fabrication Workroom	1	50.0	50.0		
Store Room	1	28.0	28.0		
Cast Rectification Room	1	20.0	20.0		
Casting Rooms	3	10.0	30.0		
Store Room	1	8.0	8.0		
Sub Total			**411.0**		
Staff Facilities					
Offices -1 person	2	9.0	18.0		
Staff Base / Workstations	2	18.0	36.0		
OT Base	1	24.0	24.0		
Staff Restroom & Beverages	1	18.0	18.0		
Staff WCs	3	2.0	6.0		
Cleaners Room	1	7.0	7.0		
Sub Total			**109.0**		

Total Net			**732.5**
Planning	**5%**		**36.6**
Sub-Total			**769.1**
Engineering	**3%**		**23.1**
Circulation	**22%**		**169.2**
Total			**961.4**

OUTPATIENTS

Description	Qty	Unit Area m²	Total Area m²	ADB CODE	Comment
Outpatient Entrance					
Enquiry / reception point	1.0	10.0	10.0		
Vending Area & Telephones	1.0	3.0	3.0		
Sub Total			**13.0**		
Phlebotomy Room (1 position)	2.0	8.5	17.0		
Physical Measurement (5 Bays)	1.0	18.0	18.0		
Medicines Management Room / Dispensing	1.0	15.0	15.0		
Youth Booth	1.0	16.0	16.0		
Baby / Infant Feeding Room	1.0	5.0	5.0		
Nappy Change Room	1.0	4.0	4.0		
Toilets	4.0	2.5	10.0		
Disabled WC	1.0	4.5	4.5		
Store	1.0	6.0	6.0		
Cleaners Room	1.0	6.0	6.0		
Sub Total			**101.5**		
Total for Outpatient Entrance			**114.5**		

Admin & FM & Staff Areas etc					
Medical Records Sorting / Holding	1.0	15.0	15.0		
Disposal Hold	3.0	6.0	18.0		
Resus Bays	1.0	1.0	1.0		
OPD Manager	1.0	10.0	10.0		
OPD Sister	1.0	10.0	10.0		
Admin / Clinical Notes Workstations	1.0	16.0	16.0		
Changing & Shower / WC - Male Staff	1.0	8.0	8.0		
Changing & Shower / WC - Female Staff	1.0	18.0	18.0		
Sub Total			**96.0**		

Generic OPD Cluster A					
Waiting Area (incl parent supervised play)	1.0	45.0	45.0		
Reception / Office - 3 position	1.0	12.0	12.0		
WC - Disabled Size	1.0	4.5	4.5		
Nurse Base	1.0	4.0	4.0		Adjacent to waiting area
Relatives / Interview / Counselling Room	1.0	9.0	9.0		
Treatment Room (with prep area)	1.0	16.5	16.5		
Consult / Exam Room	8.0	16.5	132.0		
Equipment / General Store	1.0	5.0	5.0		
Sub Total			**228.0**		

Generic OPD Cluster B					
Waiting Area (incl parent supervised play)	1.0	30.0	30.0		
Reception / Office - 3 position	1.0	12.0	12.0		
WC - Disabled Size	1.0	4.5	4.5		
Nurse Base	1.0	4.0	4.0		Adjacent to waiting area
Relatives / Interview / Counselling Room	1.0	9.0	9.0		
Treatment Room (with prep area)	1.0	16.5	16.5		
Consult / Exam Room	8.0	16.5	132.0		
Equipment / General Store	1.0	5.0	5.0		
En-suite Bathroom / WC to Treatment Room			6.0		
Additional Space Allowance for Treatment Room			4.5		
Sub Total			**223.5**		

OPD Cluster C (Nephrology & Dental)					
Waiting Area (incl parent supervised play)	1.0	30.0	30.0		
Reception - 3 position	1.0	12.0	12.0		
WC - Disabled Size	1.0	4.5	4.5		
Nurse Base	1.0	4.0	4.0		Adjacent to waiting area
Dental Room (1 chair)	2.0	20.0	40.0		
Dental Lab	1.0	6.0	6.0		
Consult / Exam / Exam (Single Sided)	5.0	13.5	67.5		
Treatment Room (with prep area)	1.0	16.5	16.5		
Equipment / General Store	1.0	6.0	6.0		
Sub Total			**186.5**		

Generic OPD Cluster D					
As Cluster A			228.0		
Plaster Treatment Room & Store			36.0		4 couches + Desk etc + Store
Sub Total			**264.0**		

Utility Room Support for Clusters A & B					
Clean Utility	1.0	14.0	14.0		
Dirty Utility	1.0	9.0	9.0		
Store Room	1.0	8.0	8.0		
Specimen / Disabled WC	1.0	4.5	4.5		with hatch to dirty utility
Linen Cupboard	1.0	1.0	1.0		
Staff WC	1.0	2.0	2.0		
Cleaners Room	1.0	6.0	6.0		
Sub Total			**44.5**		

Utility Room Support for Clusters C & D					
As for Clusters A&B			44.5		
Sub Total			**44.5**		

OPD Cluster E (Ophthalmology & Dietician)					
Waiting Area (incl parent supervised play)	1.0	45.0	45.0		
Reception - 3 position	1.0	12.0	12.0		
WC - Disabled Size	1.0	4.5	4.5		
Nurse Base	1.0	4.0	4.0		Adjacent to waiting area
Orthoptic Examination Room	3.0	20.0	60.0		
Ophthalmology consulting/examination room	4.0	13.0	52.0		
Equipment / General Store	1.0	6.0	6.0		
Sub Total			**183.5**		

OPD Cluster F (Audiology)					
Waiting Area (incl parent supervised play)	1.0	30.0	30.0		
Reception - 3 position	1.0	12.0	12.0		
WC - Disabled Size	1.0	4.5	4.5		
Nurse Base	1.0	4.0	4.0		Adjacent to waiting area
Audiometric Test Room	4.0	30.3	121.2		
Lobby & Control Areas	4.0	8.0	32.0		with window to test room
Workshop	1.0	12.0	12.0		
Interview / Fitting / Consult / Vestibular Function	4.0	16.0	64.0		Sound dampened - see National standards
Equipment / General Store	1.0	6.0	6.0		
Sub Total			**285.7**		

Utility Room Support for Clusters E & F					
Electrophysiology Room	2.0	21.0	42.0		
Clean Utility	1.0	14.0	14.0		
Store Room	1.0	8.0	8.0		
Linen Cupboard	1.0	1.0	1.0		
Staff WC	1.0	2.0	2.0		
Sub Total			**67.0**		

OPD Cluster G (Neurology)					
Waiting Area (incl parent supervised play)	1.0	12.0	12.0		
Reception - 1 position	1.0	8.0	8.0		
WC - Disabled Size	1.0	4.5	4.5		
Staff WC	1.0	2.0	2.0		
Standard Single Sided Consult Rooms	4.0	13.5	54.0		
EEG	2.0	16.0	32.0		
Reporting / Viewing Room	1.0	25.0	25.0		
meeting rooms	2.0	20.0	40.0		
Treatment Room	1.0	16.0	16.0		
Family Room	1.0	13.5	13.5		
Assessment Classroom	1.0	12.0	12.0		
Library	1.0	12.0	12.0		
Sub Total			**231.0**		

Lung Function Suite					
Lung Volumes Lab	1	21.5	21.5		
Exercise Test lab	1	23	23		
Sweat Test Lab	1	12.5	12.5		
Infant Lung Function Lab	1	13	13		
Fitness to Fly Lab	1	12	12		
Clinical Prep/Store	1	7	7		
Reporting room	1	18	18		
Shower	1	6.5	6.5		
Sub Total			**113.5**		

Total Net			**2,082.2**
Planning	**5%**		**104.1**
Sub-Total			**2,186.3**
Engineering	**3%**		**65.6**
Circulation	**31%**		**677.8**
Total			**2,929.7**

Main OPD Area	**2,486.0**
Audiology	**443.7**

PSYCHOLOGY & LIAISON PSYCHIATRY

Description	Qty	Unit Area m²	Total Area m²	ADB CODE	Comment
Outpatient Area					Position alongside a main OPD Cluster
General Office & Reception	1	12.0	12.0		with overview of waiting area
Sub - Waiting Area	1	12.0	12.0		
WC - Asstd Ambulatory	1	2.5	2.5		
Clinical Interview Rooms	2	12.0	24.0		
Interview Room (Obs Family / Play)	1	20.0	20.0		
Observation Room	1	8.0	8.0		
Sub Total			**78.5**		

Total Net			**78.5**
Planning	**5%**		**3.9**
Sub-Total			**82.4**
Engineering	**3%**		**2.5**
Circulation	**30%**		**24.7**
Total			**109.6**

CHILD PROTECTION UNIT

Description	Qty	Unit Area m²	Total Area m²	ADB CODE	Comment
Child Protection Suite					
Consult / Treatment	2	16.5	33.0		Includes use of scopes. 2 way mirror
Family / Police Room	1	12.0	12.0		
Clinical Bathroom	1	6.0	6.0		
Sub Total			**51.0**		

Total Net			**51.0**
Planning	**5%**		**2.6**
Sub-Total			**53.6**
Engineering	**3%**		**1.6**
Circulation	**25%**		**13.4**
Total			**68.5**

DEPT OF CHILD FORENSIC PSYCHOLOGY

Description	Qty	Unit Area m²	Total Area m²	ADB CODE	Comment
DCFP					
Reception	1	10	10		Reception / waiting combined
Large group interview room(Therapy room)	1	18	18		
Observation room	1	9	9		
Therapy Rooms	3	10	30		
Soft Play ball	1	100	100		
Staff room (max 10 people)	1	15	15		
Multi disciplinary team room (10 person)	1	20	20		
Assisted Bathroom	1	14	14		
Assisted Shower room	1	8	8		
Nurses Station	1	12	12		
Work Station room	1	15	15		
Dining room	1	20	20		
Living room	1	18	18		
Quiet room	1	10	10		
OT/SLT Therapy room	1	15	15		
Therapy room with wet and dry areas	1	15	15		
2 - Bed room	2	34	68		
1 - Bed room	3	16.5	49.5		
Ensuite WC & WHB	2	4.5	9		
Store - therapy equipment	1	5	5		
school - classrooms	1	10	10		
school - classrooms	1	15	15		
school - office (3 staff)	1	15	15		
school - store	1	5	5		
school - wc's (disabled)	2	4.5	9		
ward pantry	1	12	12		
clinic treatment room	1	16.5	16.5		
DSR	1	7	7		
Sluice	1	10	10		
Storage	1	10	10		
Ward Manager Office	1	9	9		
Sub Total			**579.0**		

Total Net			**579.0**
Planning	**5%**		**29.0**
Sub-Total			**608.0**
Engineering	**3%**		**18.2**
Circulation	**24%**		**145.9**
Total			**772.1**

MAIN ENTRANCE & PUBLIC AREAS

Description	Qty	Unit Area m²	Total Area m²	ADB CODE	Comment
Entrance					
Entrance draught lobby	1	12.0	12.0		
Entrance concourse	1	30.0	30.0		
Patient trolley/wheelchair parking bay:	1	6.0	6.0		
Refreshment vending machine bay	1	3.0	3.0		
Telephones w/chair height	1	1.5	1.5		
Telephones	2	1.0	2.0		
Shopping & pushchair bay	1	8.0	8.0		
Pay-on-foot car park ticket bay	1	6.0	6.0		
Sub Total			**68.5**		
Reception					
Main Reception & Information	1	15.0	15.0		
Cashiers office	1	12.0	12.0		With security hatch & safe
Waiting area: 25 places, incl. 3 wheelchair places	1	40.0	40.0		
Sub Total			**67.0**		
Sanitary facilities					
WC: visitor ambulant user	4	2.5	10.0		
WC: visitors disabled/ wheelchair user	2	4.5	9.0		
Baby/infant feeding room	1	5.5	5.5		
Nappy change room	1	4.0	4.0		
Disabled changing/WC	1	10	10		
Cleaners Room & Equipment Store	1	12.0	12.0		
Sub Total			**50.5**		
Elective Admission & Discharge Lounge					
Reception/admissions office	1	12	12.0		
Interview rooms	2	9	18.0		
Ambulance Crew Room	1	12.0	12.0		
Sub Total			**42.0**		
Security & Porters					
Security (local) & Porters room:	1	14.0	14.0		
Sub Total			**14.0**		
Chaplaincy					
Vestibule	1	5.0	5.0		
Washing Area	1	4.0	4.0		
Chapel	1	30.0	30.0		Multi - worship
Quiet / Counselling Room	1	9.0	9.0		
Vestry office: 2 places	1	13.0	13.0		
Sub Total			**61.0**		
Radio Lollipop & Siblings Creche					
Entrance / Office	1	10.0	10.0		
Lobby & Waiting to Studio & Creche	1	8.0	8.0		
Broadcasting Studio	1	12.0	12.0		
En-suite store to Studio	1	3.0	3.0		
Siblings Creche	1	25.0	25.0		
Sub Total			**58.0**		

Volunteers Service					
Office - 2 person	1	13.0	13.0		
Volunteers Lounge & Meetings Room	1	18.0	18.0		With Beverage area
Sub Total			**31.0**		

Family Bereavement Service					
Waiting Area (4 persons)	1	6.0	6.0		
Office -- 1 person + visitors	2	11.0	22.0		
Children's Therapy Room	1	11.0	11.0		
Counselling Room	2	9.0	18.0		
WC - Ambulatory Asstd	1	2.5	2.5		
Sub Total			**59.5**		

Patient Information & Support					
Patients advocates room	1	12.0	12.0		
Interview Room - 5 places	2	9.0	18.0		
Family Information & resource centre (including Internet & NHS Information Stations x 4)	1	25.0	25.0		
Office - 2 person	1	13.0	13.0		
Sub Total			**68.0**		

Total Net			**519.5**
Planning	**5%**		**26.0**
Sub-Total			**545.5**
Engineering	**3%**		**16.4**
Circulation	**25%**		**136.4**
Total			**698.2**

Retail & Café					Gross area allowances
General Retail Space			20.0		
Snack Bar (incl seating area)			48.0		
Gross Total			**68.0**		

Additional Atria Allowance

GROUND FLOOR TOTAL **766.2**

WC Allowance for Upper Floors
3 floors @ 15m2 per floor **45.0**

DEPARTMENT TOTAL **811.2**

CONSULTANT OFFICES AND SUPPORT ACCOMMODATION

Description	Qty	Unit Area m²	Total Area m²	ADB CODE	Comment
Management & Meeting Rooms					
Management Offices	2	14.0	28.0		
Admin & Secretarial Support - 5 person (25m2) + files annexe (5m2)	1	30.0	30.0		
Other Operational Management Offies - 2 person	4	13.0	52.0		
Store Rooms	2	4.0	8.0		
Photocopying Rooms	1	6.0	6.0		
Conference / Meeting Rooms	2	25.0	50.0		
Beverage Bay	1	6.0	6.0		
Cleaner's Room	1	7.0	7.0		
WCs - Ambulant User	2	2.0	4.0		
WCs - Independent Wheelchair	1	4.5	4.5		
Sub Total			**195.5**		

Total Net			**195.5**
Planning	**5%**		**9.8**
Sub-Total			**205.3**
Engineering	**3%**		**6.2**
Circulation	**30%**		**61.6**
Total			**273.0**

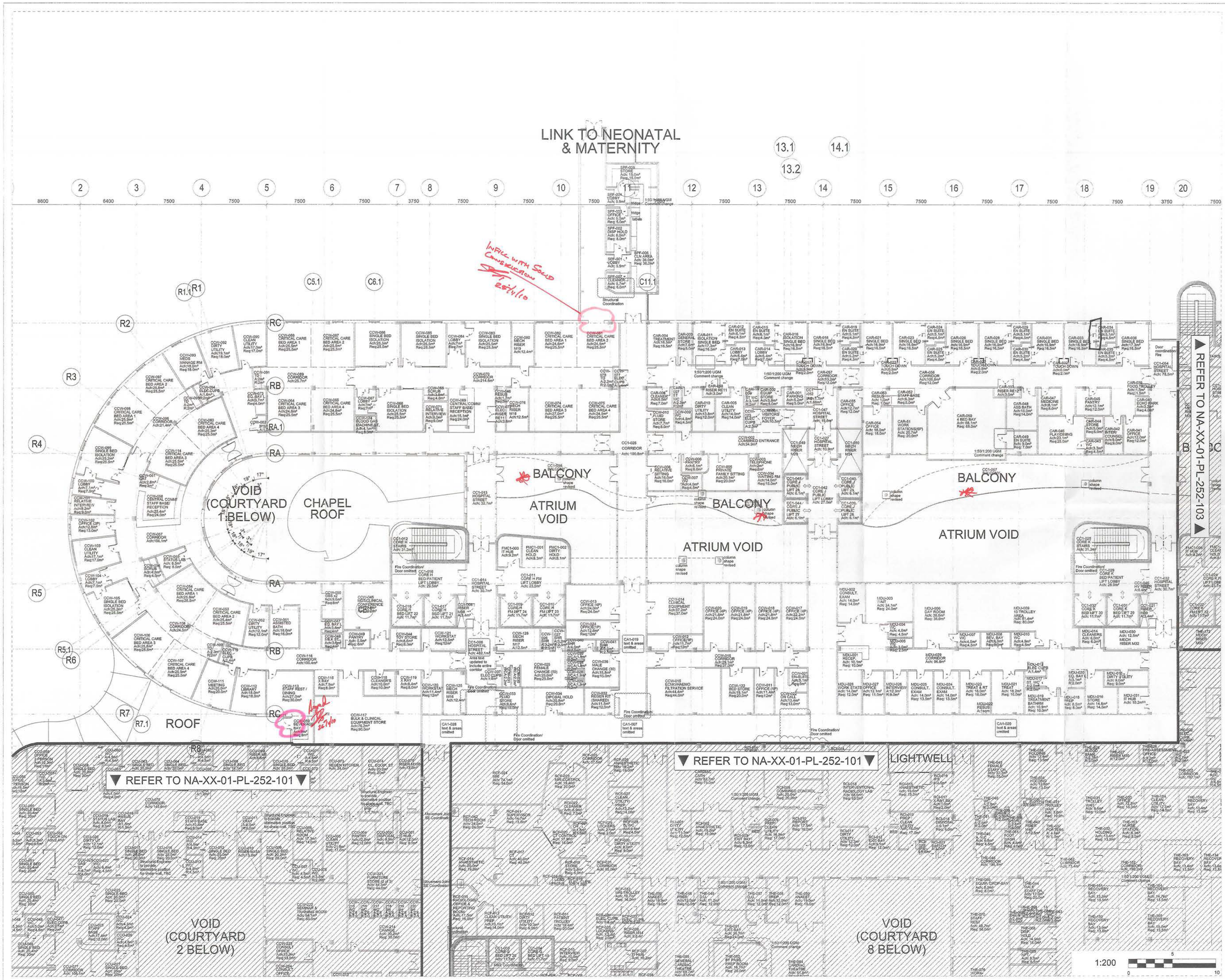

Notes:
- This drawing is copyright.
- Do not scale dimensions from this drawing.
- All discrepancies on this drawing are to be reported to the architect.
- Do not modify any element of this drawing.
- Use drawing only for purpose(s) issued.

Designer Identification of Hazard/Risk

X TYPE YOUR NOTES HERE

* Agreed to review GAMA boileamings at stage 3.

WHAT IS THIS OPENING? INFILL SOLID AS NOTE

BAYED DOORS CHANGE TO DOUBLE. ALL EN SUITES. Agreed [redacted]

ROOF ACCESS? SINGLE DOOR. Agreed [redacted]

Rev	Date	Drw	Revision Notes	Chk	App
06	22/09/10	CQ	Updated from 1:50 UGM comments. Issued for Appendix K (FBC)	GH	X
05	24/08/10	CQ	Coordination of room number & room area with SoA. Coordination comments included following Board Structural review.	AB	AB
04	30/07/10	GO	Plan amended as bubbled, revised for M&E services and Structural coordination, including any 1:200 comments from the 1:50 User Group Meetings	AB	AB
03	14/06/10	GO	General amendments & Coordination post 1:200 UGM's	JH	JH
02	03/06/10	GO	FIRST ISSUE - SPECIAL FEEDS FIRST ISSUE - CARDIOLOGY WARD FIRST ISSUE - MDU	JH	JH
01	25/05/10	GO	FIRST ISSUE - CRITICAL CARE	JH	JH

Room Project
(Full Business Case) FBC APPENDIX

	BROOKFIELD	NSGH BOARD
Name:	[redacted]	[redacted]
Date:		8/10/10
Sign:		[redacted]
Status: (A or B)		

PM 15/10/2010

Client

NHS Greater Glasgow and Clyde

Contractor

Brookfield

NIGHTINGALE associates architects
87-91 Newman Street
London
W1T 3EY
Tel: 0207 079 9900
Fax: 0207 079 9901
www.nightingaleassociates.com

Project
NEW SOUTH GLASGOW HOSPITALS (NSGH) PROJECT

Drawing Title
FIRST FLOOR PLAN
NCH CRITICAL CARE (Picu) / CARDIOLOGY WARD / SUPPORT / MDU AND SPECIAL FEEDS

Job No	Drawn	Checked	Approved
09080	GO	JH	JH
Status: Design Development		Date: 02/09/09	Scale@A1: 1:200

Drawing No						Rev
Origin	Zone	Level	Type	Content	Sequential	
NA	XX	01	PL	252	103	06

A49618520

NHS National Services Scotland

Scottish Health Planning Note 04

In-patient Accommodation: Options for Choice
Supplement 1: Isolation Facilities in Acute Settings

Health Facilities Scotland
Engineering and Environment

September 2008

A49618520

Contents

page

1. **Introduction** **3**
1.1 Context 3
1.4 Purpose of the guidance 3
1.10 Exclusions 4

2. **Operational policies and planning principles** **5**
2.1 The need to isolate patients 5
2.5 Isolation facilities 5
2.6 Enhanced single room with en-suite facilities 6
2.9 Enhanced single room with en-suite facilities and ventilated lobby (isolation suite) 6
2.12 Advantages 6
2.13 Creating pleasant environments 6
2.16 Record keeping 7
2.17 Maintenance and cleaning 7

3. **Design guidance** **9**
3.1 New build isolation facilities 9
3.1 Enhanced single room with en-suite facilities 9
3.3 Enhanced single room with en-suite facilities and ventilated lobby (isolation suite) 9
3.10 Converting existing facilities 11
3.13 Converting a single room with en-suite facilities 11
3.16 Converting a single room without en-suite facilities 12
3.18 Creating an enhanced single room with en-suite facilities and ventilated lobby (isolation suite) 12
3.23 Converting a multi-bed bay 14

4. **Engineering requirements** **15**
4.1 Engineering design philosophy 15
4.4 Basic design parameters 15
4.5 Isolation suite 16
4.5 Ventilation-general 16
4.9 Fire strategy 17
4.12 Extract ventilation 17
4.18 Supply ventilation 18
4.23 Record keeping 19

© Health Facilities Scotland a Division of NHS National Services Scotland

4.24 Other considerations 20
4.25 Service and maintenance 20

Appendices 21
Appendix 1: Example room layouts 22
Appendix 2: Acceptance testing of isolation suite 30

References 32

Disclaimer

The contents of this document are provided by way of general guidance only at the time of its publication. Any party making any use thereof or placing any reliance thereon shall do so only upon exercise of that party's own judgement as to the adequacy of the contents in the particular circumstances of its use and application. No warranty is given as to the accuracy, relevance or completeness of the contents of this document and Health Facilities Scotland, a Division of NHS National Services Scotland, shall have no responsibility for any errors in or omissions therefrom, or any use made of, or reliance placed upon, any of the contents of this document.

1. Introduction

Context

1.1 Healthcare Associated Infection (HAI) is a burden on the NHS. It affects an estimated one in ten NHS hospital patients each year (DH, 2003) at an annual cost of £1bn (National Audit Office, 2000).

1.2 Many patients with an infection require physical isolation. However, often patients cannot be isolated because of a shortage of single rooms and isolation suites.

1.3 The key to effective isolation on acute wards is the provision of single rooms with en-suite sanitary facilities. Single rooms reduce the risk of cross-infection for non-airborne diseases and help to lower the incidence of HAI. Most patients on acute wards can be isolated in single rooms with en-suite facilities. All single rooms in new-build hospitals should have en-suite facilities so that they can be used to isolate patients for a variety of reasons and not just for infection control purposes.

Purpose of the guidance

1.4 This Supplement to SHPN 04: 'In-patient accommodation: options for choice', provides guidance on the facilities required for isolating patients on acute general wards.

1.5 For infection control purposes, a single room without en-suite is better than no single room at all. However, the guidance in this Supplement is based on best practice, and describes how a single room can be enhanced to provide an effective isolation facility for patients on acute general wards. The Supplement has two aims:

- to set a standard for new-build facilities;
- to provide Health Boards wishing to convert existing accommodation with simple design options that can be implemented relatively quickly and cost-effectively.

1.6 This guidance:

- explains how a single room with en-suite sanitary facilities can be enhanced to provide effective isolation for patients with infections that could be transmitted within healthcare;
- describes how an enhanced single room with en-suite facilities and a ventilated lobby can provide an isolation suite for patients who have airborne infections or who need to be protected from them;

- can be used for both new-build schemes and the upgrading of existing accommodation.

1.7 The guidance also contains examples of room layouts.

1.8 The guidance on isolation suites in this Supplement is based on a validated design model. The aim of this Supplement is to provide practical guidance on how to provide isolation facilities that are simple to use and meet the needs of the majority of patients on acute general wards.

1.9 Information about how good design can prevent cross-infection in healthcare premises generally is provided in SHFN 30 Version 3: 'Infection control in the built environment: design and planning' and Healthcare Associated Infection-System for Controlling Risk in the Built Environment (HAI-SCRIBE). SHPN 04 Supplement 1 should be read in conjunction with SHFN 30 and HAI-SCRIBE.

Exclusions

1.10 This Supplement does not describe the specialist facilities required in infectious disease units or on wards where severely immuno-compromised patients are nursed. Guidance for these facilities will follow in a further Supplement to SHPN 04.

2. Operational policies and planning principles

The need to isolate patients

2.1 Historically, isolation in general wards has been provided in single rooms, sometimes without en-suite facilities. Rooms without en-suite facilities often cannot be used to isolate patients effectively.

2.2 Ventilated isolation suites with en-suite facilities have also been provided. They may have a ventilation system that provides a positive pressure in the room to protect the patient from infection, or a negative pressure to prevent a patient from infecting others, or the ventilation may be switchable from positive to negative. These rooms rely on staff being able to assess the type of ventilation required when a patient arrives on the ward and, for switchable systems, knowing how to select the correct ventilation mode. Patients can be put at risk by user error if the ventilation mode is not set correctly.

2.3 The provision of isolation rooms which are switchable from positive to negative air pressure is no longer recommended because of the risk of cross contamination in the event of the setting being incorrect.

2.4 There are four main reasons for caring for patients in single rooms:

- patient susceptibility to infection from other sources;
- where a patient presents an infection risk to others;
- non-medical, for example patient preference;
- clinical but not infection-related.

In terms of infection control, only patients in the first two categories require isolation. Patients in the latter two categories can be cared for in standard single en-suite rooms.

Isolation facilities

2.5 In order to simplify the use of isolation facilities, this Supplement proposes two room designs for isolating patients in acute general settings:

- enhanced single room with en-suite facilities;
- enhanced single room with en-suite facilities and ventilated bed access lobby (isolation suite).

Enhanced single room with en-suite facilities

2.6 An enhanced single room with en-suite sanitary facilities having extract ventilation is a simple, cost-effective way to provide isolation, and will meet the needs of most patients on general wards.

2.7 The room does not require any specialist knowledge or action by the nursing staff to operate it. When not being used for isolation the room can be used for general nursing.

2.8 See Section 3 for detailed design guidance.

Enhanced single room with en-suite facilities and ventilated lobby (isolation suite)

2.9 An enhanced single room with a positive pressure ventilated bed access lobby and en-suite facilities with extract ventilation provides both source and protective isolation.

2.10 The positive pressure lobby ensures that air from the corridor does not enter the isolation room, and that air from the room does not escape into the corridor. This simple design enables the suite to be used for both source and protective isolation without the need for switchable ventilation or special training for staff. It also provides safe isolation for patients whose exact condition is unknown.

2.11 See Section 3 for detailed design guidance.

Advantages

2.12 Both rooms are suitable for caring for patients not in isolation but who require a single room for other reasons. In addition, both room designs are simple in concept, by default safe in operation, and do not require the nursing staff to have any specialist ventilation knowledge.

Creating pleasant environments

2.13 Some patients with infections need to stay in isolation in hospital for long periods of time. The number of visitors they receive and the length of time they can spend with them may be restricted. This means that patients who are already vulnerable, but not necessarily physically severely incapacitated, will be confined to the room for sometimes several weeks and can experience long periods of boredom.

2.14 Accommodation for these patients should be stimulating and as comfortable as possible. Designers should try to achieve a balance between the need for a clean environment and the comfort of patients. There are a number of publications that describe in detail, evidence that supports the concept that a therapeutic environment has a positive effect on a patient's general feeling of well-being, reduces the length of stay for many patients, reduces depression,

confusion and aggressive episodes and significantly increases a patient's level of satisfaction with the overall quality of their care.

2.15 If patients are to stay in an isolation suite, it is important that they are able to see staff from their beds. Staff should also be able to see the patient in case of emergency. This reduces the psychological problems of isolation. Observation windows should have integral privacy blinds which can be controlled by both staff and patients. The sense of containment can also be reduced by providing outside views using windows with low sills.

Record keeping

2.16 Where staff are required to record lobby air pressures as part of the local COSHH assessment, facilities for completing and storing log books should be provided in the lobby.

Maintenance and cleaning

2.17 Guidance on the maintenance and cleaning of materials and finishes is contained in SHFN 30: Infection Control in the Built Environment: design and planning, planning teams should also refer to the 'Monitoring Framework for NHSScotland National Cleaning Services Specification-Guide for NHS Managers'. All surface finishes must be washable and moisture-resistant. This does not include emulsion paint.

Single Room

En-Suite Bathroom

3. Design guidance

New build isolation facilities

Enhanced single room with en-suite facilities

3.1 The design for a new-build enhanced single room with en-suite facilities is shown in Appendix 1 Sheet No 1: Example room layouts.

3.2 The general specification for single rooms is provided in SHPN 04 (2000). The enhancements and modifications recommended for isolating patients are:

- a clinical hand-wash basin, with non-touch, fixed temperature mixer tap (see paragraph 3.20) adjacent to the exit door;
- wall-mounted hand hygiene dispensers including alcohol hand rub dispensers, and disposable towel holders;
- a foot operated lidded bin for disposing of paper towels and other non-clinical items;
- suitable extract to the en-suite bathroom;
- transfer grille in en-suite door;
- en-suite WC to be non-touch flush and hand-wash basin to have single tap with flow and temperature control (see paragraph 3.20);
- external windows should be openable, but with a fixed maximum opening width for safety. They should also be lockable. Internal windows should be fixed;
- observation window in corridor wall with integral privacy blinds that can be controlled by both patients and staff;
- all windows, including observation windows, should be low enough to provide a view for patients lying in bed.

Enhanced single room with en-suite facilities and ventilated bed-access lobby (isolation suite)

3.3 The design for a new-build enhanced single room with en-suite facilities and ventilated lobby, with bed access through the lobby, is shown in Appendix 1 Sheet No 2 Example Room layouts.

3.4 The ventilated bed access lobby ensures that:

- air entering the bedroom is the clean ventilation supply from the lobby. Air from the corridor is blocked by the ventilation supply in the lobby, that is, the patient in the bedroom is protected from air from the corridor;

- potentially contaminated air from the bedroom is prevented from escaping into the corridor by the ventilated lobby, so the patient will not present a risk of infection to others.

As the lobby simultaneously prevents unfiltered air entering the room and potentially contaminated air escaping from it, the room can be used by both infectious patients and those at risk of infecting others.

3.5 The use of personal protective equipment (PPE) will be determined by local infection control policy. Facilities for putting on and removing PPE, and washing hands, are provided in the lobby. The risk of contaminants being dislodged from used PPE by the ventilation system and blown out into the corridor is considered negligible. However, a hand-wash basin and pedal operated lidded bin are also provided in the bedroom close to the exit door so that PPE can be removed in the bedroom should local policy require.

3.6 The benefits of the isolation suite are that it is simple in concept, requires no specialist knowledge by healthcare staff to operate it, and can also be used for general nursing. In addition, if the ventilation system fails the layout of the suite still ensures a degree of protection.

3.7 The general specification for single rooms is provided in SHPN 4. The enhancements and modifications recommended for isolating patients are:

In the bed access lobby:

- a clinical hand-wash basin with non-touch, fixed temperature mixer tap (see paragraph 3.20);
- wall-mounted soap dispensers, disinfectant hand rub dispensers, and disposable towel holders;
- wall-mounted plastic apron and glove dispensers and storage for other clean PPE items;
- a clinical waste bin for disposal of used PPE;
- a bin for disposing of paper towels and other non-clinical items;
- storage for room cleaning equipment;
- a suitable air supply;
- In the isolation room;
- a clinical hand-wash basin, with non-touch, fixed temperature mixer tap (see paragraph 3.20) adjacent to the exit door;
- wall-mounted hand hygiene dispensers, including alcohol hand rub dispensers, and disposable towel holders;
- a clinical waste bin for disposal of used PPE;
- observation window in corridor wall with integral privacy blinds;
- a pressure stabiliser above bedroom door.

In the en-suite bathroom:

- suitable extract system to the en-suite bathroom;
- transfer grille in the en-suite door;
- en-suite WC to be non-touch flush and wash basin to have single tap with flow and temperature control (see paragraph 3.20).

For the suite as a whole:

- sealed, solid ceiling;
- windows to the exterior and interior to be locked shut and sealed;
- recessed luminaire rated IP44;
- where the configuration of the building permits (e.g. roof space above) consideration should be given to accessing luminaires from above for lamp changing. This will avoid the need for maintenance staff to access isolation facilities to undertake this activity.

3.8 Heating and cooling of the isolation suite will normally be provided via the ventilation system.

3.9 The provision of a two-way intercommunication system between the patient's bedroom and the nurses' base should be provided (see SHTM 2015: 'Bedhead Services').

Converting existing facilities

3.10 The majority of patients requiring isolation can be cared for in enhanced single rooms with en - suite facilities that have an extract system. Only a small number of patients will need an isolation suite.

3.11 Acute general hospitals can create enhanced single en-suite rooms and isolation suites by converting bays and adapting existing single room accommodation. The layout of existing facilities may impose constraints on design, however, and planning teams will sometimes have to resolve the conflict between what is desirable and what is achievable.

3.12 For Health Boards wanting to convert existing accommodation into isolation facilities, the easiest and least expensive option is to adapt existing single rooms with en-suite sanitary facilities. However, where existing single rooms do not have en-suite facilities, Health Boards will need to reconfigure the accommodation (see paragraph 3.16).

Converting a single room with en-suite facilities

3.13 The standard furnishing and fitment requirements for a single room are described in SHPN 04: 'In-patient accommodation: options for choice'.

3.14 The additional requirements for isolation of a single en-suite room are:

- a clinical hand-wash basin, with non-touch, fixed temperature mixer tap (see paragraph 3.20) adjacent to the exit door;
- wall-mounted hand hygiene dispensers including alcohol hand rub dispensers, and disposable towel holders;
- a foot operated lidded bin for disposing of paper towels and other non-clinical items;
- suitable extract to the en-suite bathroom;
- transfer grille in en-suite door;
- en-suite WC to be non-touch flush and hand-wash basin to have single tap with flow and temperature control;
- external windows should be openable, but with a fixed maximum opening width for safety. They should also be lockable;
- observation window in corridor wall with integral privacy blinds that can be controlled by both patients and staff;
- all windows, including observation windows, should be low enough to provide a view for patients lying in bed.

3.15 A typical layout for converting an existing single room with en-suite facilities is shown in Appendix 1 Sheet No 3: Example room layouts.

Converting a single room without en-suite facilities

3.16 In an existing building it may be possible to modify three adjacent single bedrooms into two enhanced single bedrooms each with en-suite facilities - see Appendix 1 Sheet 4: Example room layouts.

3.17 The requirements for disabled access, as set out in sections 4.2 and 4.7 of The Building (Scotland) Regulations, should be met.

Creating an enhanced single room with en-suite facilities and ventilated bed access lobby (isolation suite)

3.18 When converting a single room into an enhanced single room with en-suite and ventilated lobby, any suspended ceiling must be replaced with a sealed solid ceiling. If a single room has a suspended ceiling to permit access to overhead services, a Health Board should install a sealed ceiling with sealable access hatches or move the services.

3.19 The additional requirements for upgrade to an isolation suite are as follows:

In the bed access lobby:

- a clinical hand-wash basin with non-touch, fixed temperature mixer tap (see paragraph 3.20);

- wall-mounted soap dispensers, disinfectant hand rub dispensers, and disposable towel holders;
- wall-mounted plastic apron and glove dispensers and storage for other clean PPE items;
- a clinical waste bin for disposal of used PPE;
- a bin for disposing of paper towels and other non-clinical items;
- storage for room cleaning equipment;
- a suitable air supply.

In the bedroom:

- a clinical hand-wash basin, with non-touch, fixed temperature mixer tap (see paragraph 3.20) adjacent to the exit door;
- a clinical waste bin for disposal of used PPE;
- non-opening observation window in corridor wall with integral privacy blinds;
- a pressure stabiliser above the bedroom door into the lobby;
- In the en-suite bathroom;
- suitable extract system to the en-suite bathroom;
- transfer grille in the en-suite door;
- en-suite WC to be non-touch flush and wash basin to have single tap with flow and temperature control (see paragraph 3.20).

For the suite as a whole:

- sealed, solid ceiling;
- windows to the exterior and interior to be locked shut and sealed;
- recessed luminaire rated IP44;
- where the configuration of the building permits (e.g. roof space above) consideration should be given to accessing luminaires from above for lamp changing, This will avoid the need for estates staff to access isolation facilities to undertake this activity.

3.20 Point of use oversink, non-touch, fixed temperature water heaters may be used as an alternative to ‘fixed temperature mixer taps’.

3.21 The provision of a two-way intercommunication system between the patient’s bedroom and the nurses’ base should be provided (see SHTM 2015: ‘Bedhead services’).

3.22 An option for reconfiguring two existing single rooms to provide one enhanced single room with en-suite facilities and ventilated lobby, with bed access through the lobby, is shown in Appendix 1 Sheet 5: Example room layouts. Where space restrictions mean bed access through the lobby is not possible, an

alternative layout gives bed access directly to the bedroom from the corridor shown in Appendix 1 Sheet 6: Example room layouts. In this case the lobby would be sized for personnel access only.

Converting a multi-bed bay

3.23 An existing four-bed bay may be converted to provide two enhanced single rooms with en-suite facilities in Appendix 1 Sheet 7: Example room layouts.

3.24 In this configuration it is not possible to provide a normal observation window. As observation is critical, however, one option would be to provide fully-glazed lobby and bedroom doors, with integral privacy blinds, to enable observation from the corridor and to provide a view out for the patient.

Hand rub dispenser

4. Engineering requirements

Engineering design philosophy

4.1 This Section describes the ventilation system philosophy for an isolation suite with a patient's bedroom, en-suite sanitary facilities and ventilated lobby. A methodology for validation of the performance standard is given in Appendix 2.

4.2 The isolation suite and its ventilation system are based on a validated design. The engineering guidance given in this Section aims to provide a practical, 'fail-safe' design solution for isolating patients on acute general wards.

4.3 The ventilation system is designed on the basis that all its constituent parts, as described in Table 1, work together to form an integrated system. For example, air to the suite is supplied at high level in the lobby, with extract in the en-suite bathroom. This ensures good airflow through the entire isolation suite. Similarly, the volumetric airflow rate in the lobby is determined by the number of air changes required in the patient's bedroom. Modifying or failing to provide one element of the system will jeopardise the performance of the system as a whole.

Basic design parameters

4.4 The patient's bedroom is to have 10 air changes per hour. The entry lobby is to be at +10 Pascals with respect to the corridor. The en-suite room is to have at least 10 air changes per hour and be at a negative pressure with respect to the patient's bedroom. Table 1 gives nominal design values calculated for rooms of the size stated. The air change rates and pressure differentials below should be maintained when filters are dirty. Variable-speed control of fan motors would be an acceptable method of flow control, within the normal operating range of the fan's speed.

Room	Parameter	Nominal Design Values
Lobby	Room volumes Bed access lobby (5m2 x 2·7m) Personnel access lobby (4m2 x 2·7m)	 13·5 m^3 10·8 m^3
	Pressure differential to corridor	Nominally 10 Pascals
	Supply air flow (for a room of this size)	Bed access lobby - 238 l/s Personnel access lobby - 208 l/s
	Air change rate	Bed access lobby – 63 per hour Personnel access lobby – 69 per hour
Isolation Room	Room volume (19m2 x 2.7m)	51.3m^3
	Pressure differential to corridor	Nominally zero
	Room air flow (for a room of this size)	158 l/s
	Air changes rate	10 per hour
En-suite	Room volume (6m2 x 2·7m)	16·2m^3
	Pressure differential to isolation room	Negative
	Extract air flow (for a room of this size)	158 l/s (If extract is fitted in the isolation room this reduces to 45 l/s in the en-suite with 113 l/s extract in the isolation room)
	Air change rate	At least 10 per hour

Table 1: Isolation Suite – Ventilation Parameters

Note: In this example the design parameters are based on SHPN 04: 'In-patient accommodation: options for choice'. The en-suite is sized to comply with BS 8300 accessibility requirements.

The airflow rates quoted do not include any allowance for construction leakage. This has been set at 1 l/s of air per 1m^3 of suite envelope volume (see Appendix 2).

Where immuno-compromised patients are to be accommodated, such as in transplant units or specialist cancer units, there could be a need for positive pressure isolation rooms.

Isolation Suite

Ventilation – general

Ideally each suite should have its own dedicated supply and extract system. If two or more suites share a ventilation system there will be an inevitable increase in the complexity of the system and a corresponding reduction in reliability and serviceability. Further complications will occur when individual suites have to be isolated for deep cleaning following occupation. Routine maintenance of the ventilation system will result in complete closure of all suites

that it serves. For these reasons it is strongly recommended that each suite should have its own ventilation system. However, refer also to paragraph 4.8.

4.6 The object should be to keep the ventilation systems as simple as possible. Standby fans or motors are not required for either supply or extract. This is because the system as designed is robust enough to withstand fan failure without significantly compromising the level of protection. A flow sensor should be fitted to each system that will alarm on fan failure at a designated nurse station and the estates department.

4.7 Ductwork should be kept as direct and simple as possible. In order to facilitate duct cleaning, volume control devices and other obstructions in the distribution ducts should be avoided. Supply and extract flow rates should, where possible, be set by terminal and duct size design. In the unlikely event that volume control devices are required, iris dampers are the preferred type.

4.8 In a high-rise building a common supply and extract system may be the only feasible solution. In this case, run and standby fans would be required for the extract and a duplicate supply unit may be considered necessary. The supply and extract branches to each isolation suite should be fitted with spring-close gas-tight dampers. This will permit individual suites to be shut down for cleaning and maintenance. The common supply and extract systems will need to be controlled to ensure a constant volume in each isolation suite branch regardless of the number in use. The overall design should ensure that short-circuiting couldn't occur between isolation suites.

Fire strategy

4.9 The isolation suite is intended to be built as a single fire compartment. The positive pressure in the lobby will deter smoke originating in the corridor from entering the room. Smoke from a fire in the room will be contained within the suite and extracted via the en-suite extract. Due to this. the ventilation system serving the isolation facility should be kept running in the event of a fire.

4.10 Fire rated ductwork should be provided such that ducts can be considered an extension of the isolation suite. Fire dampers, where the ducts penetrate walls and floors, will not then be required.

4.11 A motorised smoke/fire damper should be fitted at the discharge of the supply air handling unit (AHU). The damper should close in the event of an AHU or intake fire under the control of a smoke detector mounted in the AHU.

Extract ventilation

4.12 An extract terminal should be fitted at high level in the en-suite room. An additional terminal may be fitted in certain circumstances at low level adjacent to the bedhead in the bedroom. The clinical requirement for this should be verified and such requirements would probably relate to highly infectious patients.

4.13 A transfer grille should be fitted at low level in the door between the bedroom and en-suite room.

4.14 The extract duct should be fitted with a spectacle plate or gas-tight damper so that the system can be sealed to allow the isolation suite to be disinfected. The plate or damper should be fitted at the inlet of the extract fan. This will also permit isolation of the extract fan for service and maintenance.

4.15 The extract fan unit should be located outside the building so that all ductwork within the building is under negative pressure. Access and cleaning hatches should only be fitted where absolutely necessary. If fitted they should be of the sealed type and marked with a bio-hazard symbol. If the fan has to be located inside the building it should be as close as practicable to the outside. The extract fan motor should be mounted out of the air stream and should be capable of being changed without withdrawing the impeller or opening up the ductwork. The extract fan should draw its power from the essential electrical system.

4.16 Extract filters will not be required provided that the fan can discharge in a safe location 3 m above the building height. If extract filters are fitted they should be in a 'safe change housing' outside the building on the suction side of the fan. Extract filters, where fitted, should be of H14 grade. Even if filtered, extract air must not be re-circulated.

4.17 Extract ductwork, the fan and discharge stack must be clearly marked to identify the isolation suite that they serve. Service, maintenance, cleaning and filter change of the system will be subject to a 'Permit to Work'.

Supply ventilation

4.18 The supply AHU should comply in all respects with the minimum standards set out in SHTM 2025:'Ventilation in Healthcare Premises'. (*This SHTM is under review and is listed for replacement by SHTM 03*). Heating and cooling should be provided, but not humidification. The fire/smoke damper fitted in the discharge from the AHU should close on plant shutdown and/or airflow failure, sealing the AHU from the distribution ductwork. This will prevent any reverse airflow and permit routine maintenance or system disinfection. The supply fan should draw its power from the essential electrical system.

4.19 The supply AHU and distribution ductwork must be clearly marked to identify the isolation suite that they serve. Access and cleaning hatches should only be fitted where absolutely necessary. They should be of the sealed type and marked with a bio-hazard symbol. Service, maintenance, cleaning and filter change of the system will be subject to a permit to work.

4.20 A G3 pre-filter and final filter should be fitted in the AHU. The lobby air supply terminal should be of a type into which a HEPA filter can be fitted. While it is not envisaged that a HEPA filter will be routinely required, this arrangement will allow for subsequent fitting when appropriate with the least disturbance. A

sealable upstream DOP injection test point will be required in the supply duct so that, if a HEPA filter is fitted, it can be challenge tested on installation.

4.21 A pressure stabiliser of the balanced blade type, set to operate at 10 Pascals, should be fitted above the door between the lobby and the bedroom. The stabiliser should be visible so that its correct operation can be seen. It should be of a style that will operate silently, and be correctly sized and positioned so that it does not cause a draught that would be uncomfortable for patients.

4.22 A direct reading gauge showing the pressure in the lobby with respect to the corridor should be mounted at eye level on the corridor wall adjacent to the lobby entry door. The gauge and lobby entry door must be clearly marked to identify the isolation suite to which they refer. In common systems serving more than one isolation room, automatic closing backdraught dampers will be required. Where HEPA filters are installed, these should be located so that staff can access them without recourse to entering isolation suites. Audio and visual alarms must be located at the entrance to the lobby and bedroom to warn nursing and maintenance staff of potential unsafe conditions. Continuous monitoring should be provided with remote indication at nurses stations, interlinked to the Building Management System with time delay (adjustable by Estates personnel) to take account of running-up of standby motors or damper operations or other plant items that may take time to open or close. Alarms based on sensing airflow failure should be provided rather than electrical failures. Alarm sound levels should be sufficient to attract attention without distress or annoyance and, if muted, should re-activate at 5-10 minute intervals.

Record keeping

4.23 A logbook will be required for each isolation suite. It should contain the following information:

- a schematic layout of the isolation suite and ventilation system serving it;
- information on the ventilation design parameters;
- a record of the actual ventilation performance at initial validation. (All of the tests set out in Appendix 2 ‘Acceptance testing of isolation suite’ should be carried out);
- records of the annual validations. (The parameters set out in Appendix 2 should be measured);
- records of the lobby pressure, taken by ward staff from gauges and monitoring devices provided;
- records of any routine service and maintenance activities;
- records of any repairs or modifications;
- a method statement for disinfecting the system.

Estates management should ensure that nursing staff are familiar with pressure gauges and able to record readings in the appropriate log book.

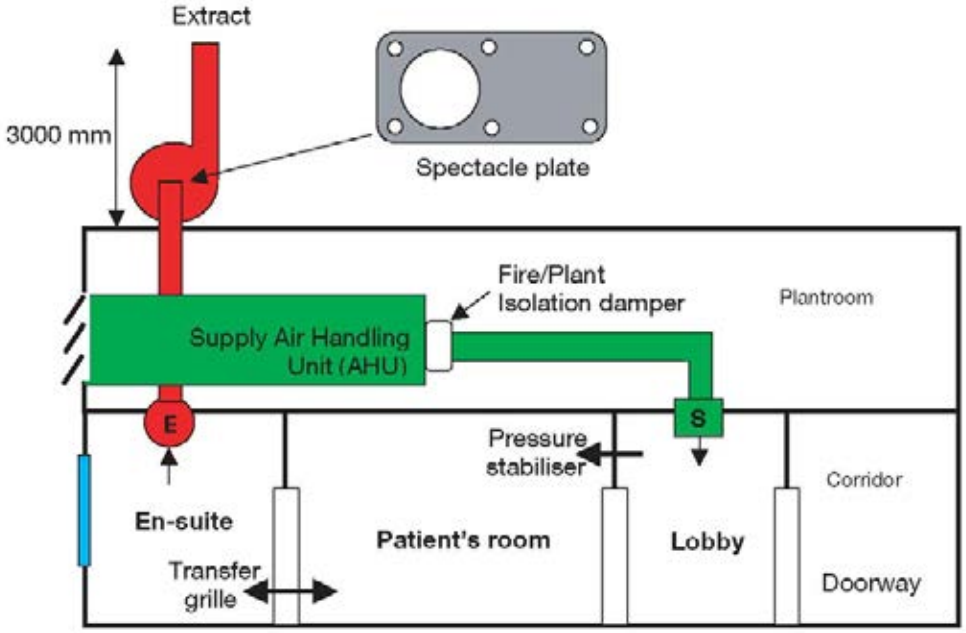

Isolation suite ventilation system – example layout

When the suite is taken out of use, the logbook should be preserved for at least five years.

Other considerations

4.24 As far as practicable, access to domestic hot and cold water services and their associated thermostatic mixing valves should be via access panels in the lobby or corridor. Every effort should be made to avoid service and maintenance staff having to enter or pass through the bedroom when carrying out routine service and maintenance tasks.

Service and maintenance

4.25 Spectacle plates or gas-tight dampers should be used to seal the system, should the suite and/or its ventilation system require disinfection. A method statement should be prepared detailing the procedure. For further guidance on disinfection refer to 'Biological agents: Managing the risks in Laboratories and healthcare premises' by the Advisory Committee on Dangerous Pathogens, available from HSE. All works of service and maintenance should be subject to a permit to work.

Appendices

Appendix 1: Example room layouts – Use of single rooms for Isolation: Key Design Principles

Appendix 2: Acceptance testing of isolation suite

Appendix 1 : Example room layouts

Use of single rooms for Isolation: Key design principles

The room layouts in this Appendix are examples and are intended as a guide. Other room configurations are possible.

Current guidance (Scottish Health Planning Note 04: In-patient accommodation: Options for choice, May 2000) recommends that *"where not in a single-bed room each bedspace should not be less than 3.0m x 2.7m".* However interim guidance, issued on the 21st February 2007 by the Scottish Executive states that having regard to ergonomic criteria, primarily the space required for patient handling and other activities which take place in the immediate vicinity of the bed it is recognised that the minimum bedspace should not be less than 3.6m x 3.7m. It also states that when planning any new in-patient accommodation or any major refurbishments of existing accommodation it is recommended that the increased bedspace is adopted.

In planning for the construction or major refurbishment of healthcare facilities it is appropriate to provide an overall single occupancy room level of between 50% and 100%.

The appropriate level within that range is a matter for each individual NHSScotland Board to consider based on the following broad criteria:

- science-based decisions relating to the clinical and nursing care of patients and overall hygiene standards;
- value-based judgements about the nature of personal services and responsiveness to the local community and generational cultures;
- operational needs, for example managing volatility in demand or changing clinical needs and priorities; and
- the need to balance these against economic considerations.

Each Board may also want to give consideration to the patient group being treated.

Sheet 1: New build single room with en-suite facilities.

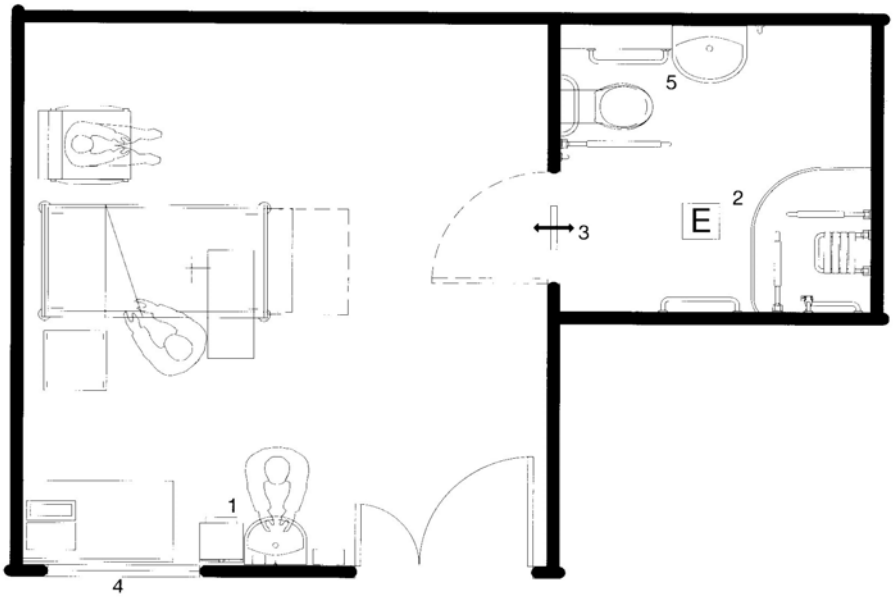

Minimum requirements:

1. Clinical hand-wash basin with non-touch, fixed temperature mixer tap.
2. Provide suitable extract fan.
3. Transfer grille to en-suite door.
4. Observation window in corridor wall with integral privacy blinds to allow for staff observation and patient views out.
5. En-suite WC to be non-touch flush and hand-wash basin to have single tap with flow and temperature control.

Sheet 2: New build single room with en-suite facilities and bed-access lobby (isolation suite)

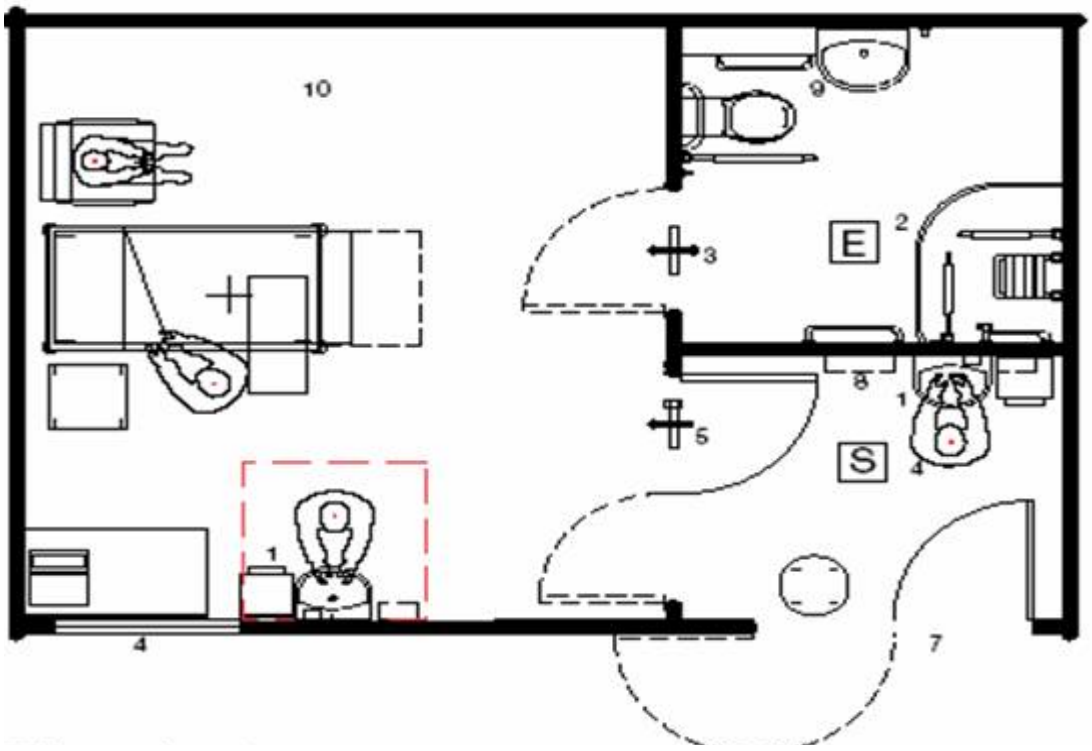

Minimum requirements:

1. Clinical hand-wash-basin with non-touch, fixed temperature mixer tap.
2. Provide suitable extract fan.
3. Install transfer grille to en-suite door.
4. Supply air.
5. Pressure stabiliser.
6. Observation window in corridor wall with integral privacy blinds to allow for staff observation and patient views out.
7. Double door for personnel and bed access.

   Disposable apron dispenser.
9. En-suite WC to be non-touch flush and hand-wash basin to have single tap with flow and temperature control.
10. Ceiling to be sealed solid construction, external window to be sealed.

Sheet 3: Existing single room with en-suite facilities

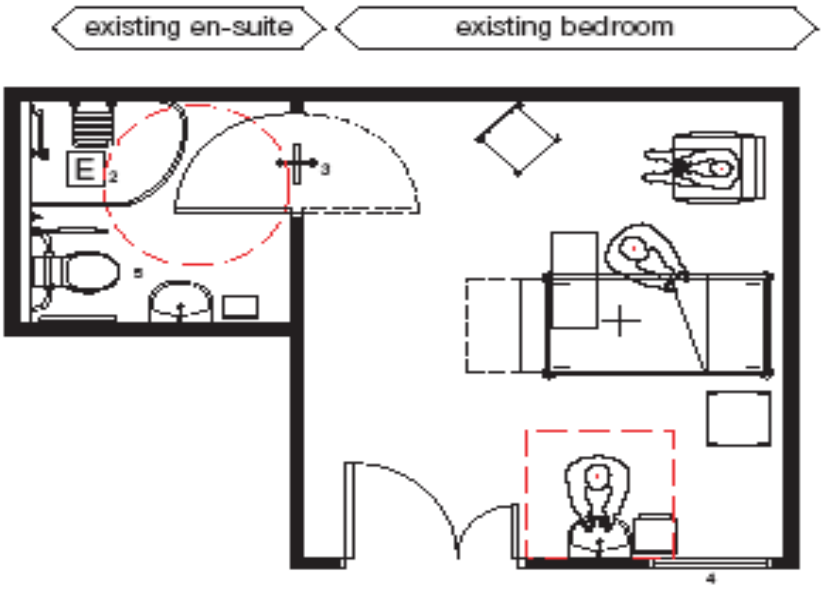

Minimum requirements to upgrade existing facilities

1. Add clinical hand-wash basin with non-touch, fixed temperature mixer tap.
2. Upgrade existing extract fan.
3. Install transfer grille to en-suite door.
4. Observation window in corridor wall with integral privacy blinds to allow for staff observation and patient views out.
5. En-suite WC to be non-touch flush and hand-wash basin to have single tap with flow and temperature control.

Sheet: 4 Single rooms without en-suite facility. Upgrading three existing single rooms to provide two single rooms with en-suite facilities

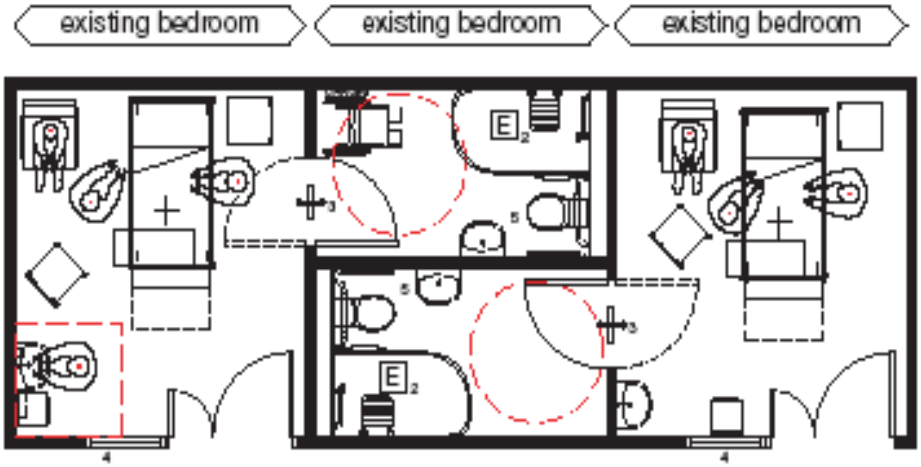

Minimum requirements to upgrade existing facilities:

1. Add clinical hand-wash basin with non-touch, fixed temperature mixer tap.
2. Provide suitable extract fan.
3. Install transfer grille to en-suite door.
4. Observation window in corridor wall with integral privacy blinds to allow for staff observation and patient views out.
5. En-suite WC to be non-touch flush and hand-wash basin to have single tap with flow and temperature control.

Sheet 5: Single rooms without en-suite facility. Upgrading two existing single rooms to provide one single room with en-suite facilities and bed access lobby

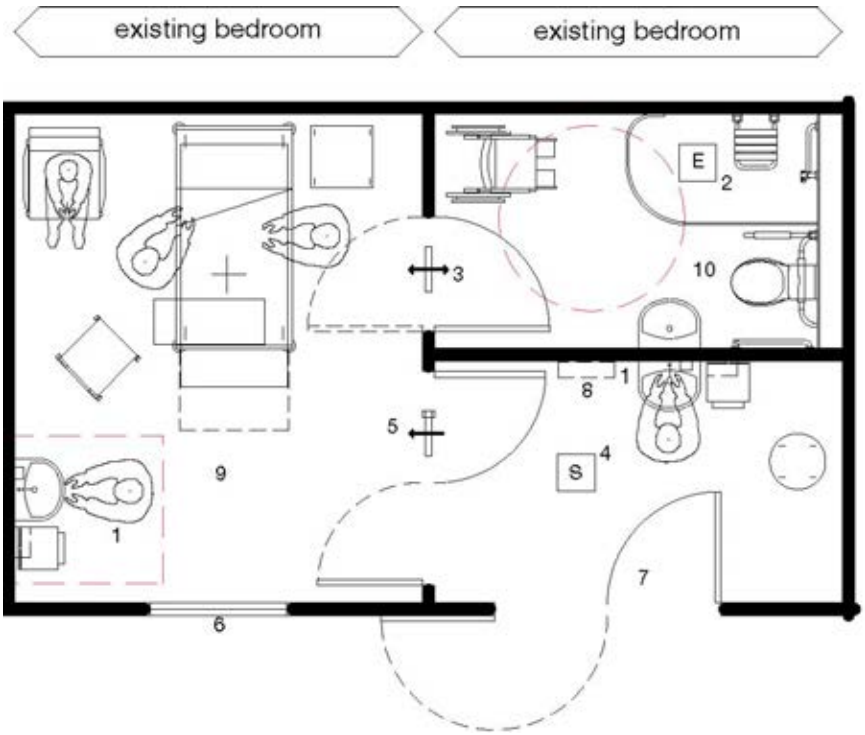

Minimum requirements to upgrade existing facilities

1. Add clinical hand-wash basin with non-touch, fixed temperature mixer tap.
2. Provide suitable extract fan.
3. Install transfer grille to en-suite door.
4. Supply air.
5. Pressure stabiliser.
6. Observation window in corridor wall with integral privacy blinds to allow staff observation and patients views out.
7. Double door for personnel and bed access.
8. Disposable apron dispenser.
9. Upgrade ceiling to sealed solid construction, external windows to be sealed.
10. En-suite WC to be non-touch flush and hand-wash basin to have single tap with flow and temperature control.

Sheet 6: Single rooms without en-suite facility. Upgrading two existing single rooms to provide one single room with en-suite facilities and personnel access lobby

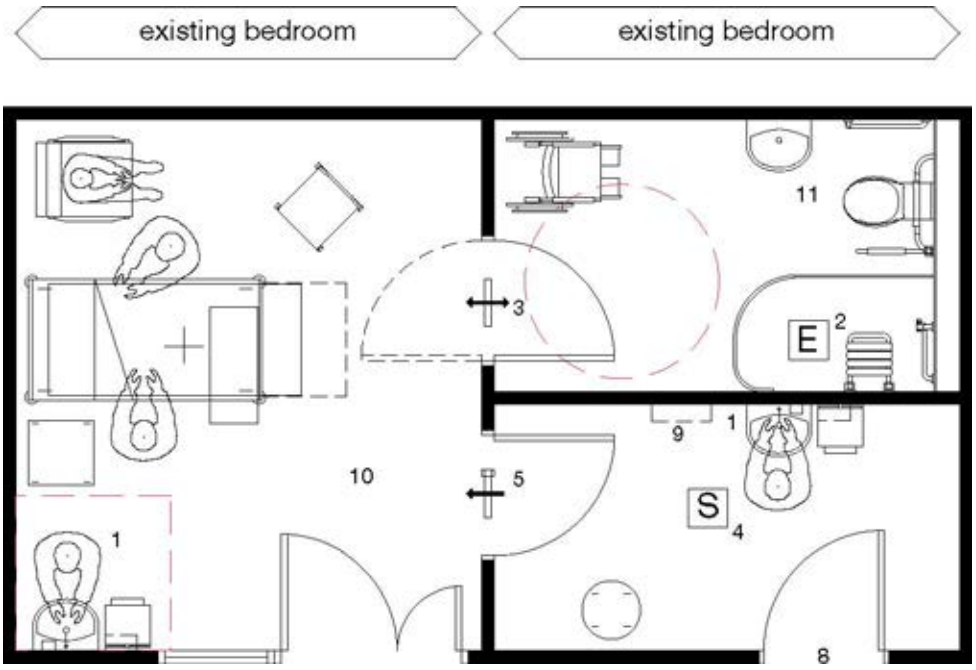

Minimum requirements to upgrade existing facilities

1. Add clinical hand-wash basin with non-touch, fixed temperature mixer tap.
2. Provide suitable extract fan.
3. Install transfer grille to en-suite door.
4. Supply air.
5. Pressure stabiliser.
6. Observation window in corridor wall with integral privacy blinds to allow for staff observation and patient views out.
7. Existing door and a half for bed access only must be kept locked and have seals to minimise air transfer.
8. Single door access via lobby.
9. Disposable apron dispenser.
10. Upgrade ceiling to sealed solid construction, external windows to be sealed.
11. En-suite WC to be non-touch flush and hand-wash basin to have single tap with flow and temperature control.

Sheet 7: Upgrading existing four bedded room to provide two single rooms with en-suite facilities.

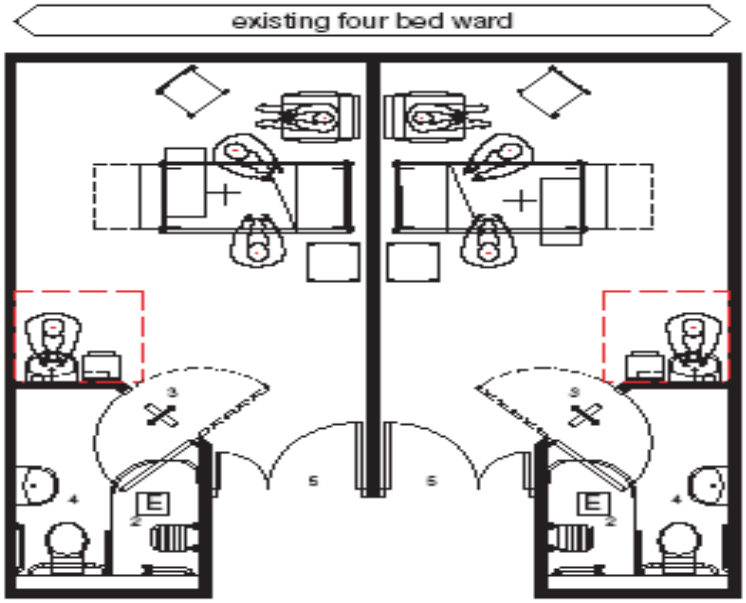

Minimum requirements

1. Clinical hand-wash basin with non-touch, fixed temperature mixer tap.
2. Provide suitable extract fan.
3. Transfer grille to en-suite door.
4. En-suite WC to be non-touch flush and hand-wash basin to have single tap with flow and temperature control.
5. Doors to be fully glazed, with integral privacy blinds, to allow staff observation and patients views out.

Appendix 2: Acceptance testing of isolation suite

Definitions

Isolation suite

Includes the entry lobby, patient's room, en-suite facility and any storage or other area directly accessible from the patient's or en-suite room.

Isolation suite envelope

The isolation room suite bounded by a solid floor, solid ceiling and full-height walls that separate it from any other adjoining space or the outside.

Validation – Isolation suite air permeability (leakage rate)

The suite will be considered fit for purpose if at a test pressure of +20 and –20 Pascals it has an average leakage rate of not more than 1 l/s of air per 1m^3 of envelope volume. The method of testing is set out below.

Rationale*:* To ensure effective isolation, it is important that air leakage to or from adjacent areas is kept to a minimum. Construction gaps should be minimised and service penetrations sealed before the suite is tested. The test pressures are significantly more than would be achieved under a ventilation fault condition within the isolation suite. When in operation, the patient's room and en-suite are designed to be at a neutral or slightly negative pressure so the actual leakage between adjoining spaces should be insignificant.

Validation

Filtration test standards

General and fine filter grades to BS EN 779:2002 should be visually inspected to ensure that they are free from tears or other damage at the time of installation. They should be a good fit in their housing, with no obvious gaps that could allow air bypass.

High Efficiency Particulate Air (HEPA) filters, where fitted, should be certified by their manufacturer for conformity to BS EN 1822:2000. When installed, their performance should be checked with a particle counter using the method set out in BS EN 1822:2000 for in situ aerosol testing.

Air permeability – Tests method

1. Establish the volume of the isolation suite envelope as defined above.
2. Turn off the suite supply and extract ventilation systems and those serving adjoining spaces. (Rationale: All adjoining spaces need to be at atmospheric pressure in order to establish the true leakage rate.)
3. Seal all supply and extract terminals.
4. Wedge all internal doors open.
5. Fit a temporary board seal and test fan in the lobby to corridor doorway.
6. Run the fan to maintain a positive test pressure of 20 Pascal for at least two minutes.
7. Measure the airflow rate of the fan.
8. Reverse the fan and run it to maintain a negative test pressure of 20 Pascal for at least two minutes.
9. Measure the airflow rate of the fan.
10. Average the two airflow readings obtained.
11. Calculate the leakage rate in l/s of air per m^3 of envelope volume. If the isolation suite envelope is correctly sealed the readings should be within 5% of each other.

Further details of the test method are contained in 'Testing buildings for air leakage', CIBSE, TM23, 2000.

Close all internal doors and, using the test fan, check that the pressure stabiliser opens at 10 Pascal and that it will carry the design airflow without flutter.

These tests should be carried out at initial commissioning and as necessary thereafter following works of refurbishment or when there is any doubt as to the actual performance standard of the suite.

System operating standard

The suite will be considered fit for purpose if, with the ventilation system operating and all doors closed, the following parameters are achieved:

- a positive pressure of between 10 and 12 Pascals between the entry lobby and the corridor;
- the patient's room has an air change rate of at least 10 per hour;
- the en-suite room is at a negative pressure with respect to the patient's room;
- a failure of either the supply or extract fan will be indicated at a designated nurse station and the estates department.

The suite should be tested following initial commissioning and thereafter re-tested at least annually for conformity with this operating standard.

References

Acts and Regulations

Control of Substances Hazardous to Health (COSHH) Regulations 2002 and subsequent amendments, SI 2002 No 2677. The Stationery Office. http://www.opsi.gov.uk/si/si2002/20022677.htm

The Building (Scotland) Regulations 2004 and Amendment Regulations 2006, 2007, SI 2000 No 2531. The Stationery Office. http://www.hmso.gov.uk/legislation/scotland/ssi2004/20040406

British Standards etc

BS 8300: 2001 Design of buildings and their approaches to meet the needs of disabled people – Code of practice. British Standards Institute, London.

BS EN 779:2002 Particulate air filters for general ventilation. Determination of the filtration performance.

BS EN 1822-4:2000 High efficiency air filters (HEPA and ULPA). Determining leakage of filter element (scan method).

BS EN 1822-5:2000 High efficiency air filters (HEPA and ULPA). Determining the efficiency of filter element.

NHSScotland Publications

Scottish Health Facilities Note (SHFN) 30: 'Infection control in the built environment: design and planning'. Health Facilities Scotland, 2007.

Scottish Health Planning Note (SHPN) 04: 'In-patient accommodation: options for choice'. Health Facilities Scotland 2001.

Scottish Health Technical Memorandum 2015: 'Bedhead Services' Health Facilities Scotland 2001.

Scottish Health Technical Memorandum 2025: 'Ventilation in healthcare premises'.
Health Facilities Scotland, August 2001. (new edition forthcoming 2008, 'SHTM 03')

Scottish Health Technical Memorandum 2027: 'Hot and cold water supply, storage and mains services'. Health Facilities Scotland, December 2001. (Revised version SHTM 04 in preparation for publication in 2008).

Scottish Health Technical Memorandum 2040: 'The control of legionellae in healthcare premises: a code of practice'. Health Facilities Scotland December 2001. (Revised version in preparation for publication in 2008 within SHTM 04).

Other publications

The management and control of hospital acquired infection in acute NHS Trusts in England. National Audit Office, 2000.

Biological agents: Managing the risks in Laboratories and healthcare premises. Advisory Committee on Dangerous Pathogens, The Stationary Office.

http://www.hse.gov.uk/biosafety/biologagents.pdf

Testing buildings for air leakage. CIBSE, TM23, 2000.

Useful websites

Hospital Infection Society	http://www.his.org.uk
Infection Control Nurses' Association	http://www.icna.co.uk
Health Protection Agency	http://www.hpa.org.uk
Royal College of Nursing	http://www.rcn.org.uk
Health Facilities Scotland	http://www.hfs.scot.nhs.uk
Health Protection Scotland	http://www.hps.scot.nhs.uk

From: Ramsay, David (Capita)
To: McKechnie, Stewart
Subject: {Disarmed} FW: QEUH – Isolation Rooms,
Attachments: 160531 QEUH Isolation Rooms Meet Agenda.pdf
21 - AHU 16 SUPPLY ISOLATION ROOM REPORT with schem.pdf
41 - 16-EF01 (1ST FLOOR ISOLATION) REPORT.pdf
HFS Isolation room status.docx
ZBP-XX-XX-SC-524-871.pdf

-----Original Appointment-----
From: Ramsay, David (Capita) [mailto:dave.ramsay@[redacted]
Sent: 27 May 2016 14:34
To: Ramsay, David (Capita); IAN POWRIE; DOUGLAS ROSS ; David Wilson; JOHN McEWAN ; DAVID LOUDON
Subject: QEUH – Isolation Rooms,
When: 31 May 2016 14:00-15:30 (UTC) Dublin, Edinburgh, Lisbon, London.
Where: Meeting Room 5, New FM & Lab Medicine Building, QEUH

ALL,
Meeting convened to discuss Isolation Rooms and SHPN 04 Supplement 1. Due to recent matters raised by ID Physicians & ICD colleagues at QEUH, NHSGGC wish to seek confirmation from Health Facilities Scotland (HFS) on certain matters relevant to SHPN 04 Supplement 1. In advance of this, the Team requires to be unified in support of any submission and supporting information.
Agenda attached. Proposed submission pack forms Part 1 of the agenda. Ian Powrie and John McEwan met on site on 25th May 2016 to view Isolation Rooms and John's Notes from that meeting forms Parts 2 and 3 of the agenda which includes relevant design and technical matters pertaining to the proposed submission.

Apologies received from David Loudon who is included in meeting notification for information purposes.

Regards,
DAVE
Dave Ramsay BSc (Hons), BArch, RIBA, RIAS
Technical Director
Property and infrastructure
Capita, 7 West Nile St, Glasgow, G1 2PR

Tel: [redacted] Mob: [redacted]
Email: dave.ramsay[redacted]
MailScanner has detected a URL mismatch from "urldefense.proofpoint.com" claiming to be www.capita.co.uk/property
<https://urldefense.proofpoint.com/v2/url?u=http-3A__www.capita.co.uk_property&d=CwMF-g&c=Gd9i_7dCjuCVW3mNb66s2Vujf-jTSUcMpPMNuR2h5uQ&r=iieMM-2VcBLfc9Q8HZ0ivKDh5550Vr8iv3OLoRFxFhXa3uB7-qb1gzGPBST1us1F&m=08ZK_N9Ppy3PWX1EyotOBQUZR-9IxD9XkPOVYKqbbHo&s=dEAQhZEijQqXsoDakoz8CkWbbagANlJvhzOzQrzGuUc&e=>

We | Listen Create Deliver

Message protected by MailControl: e-mail anti-virus, anti-spam and content filtering.
MailScanner has detected a URL mismatch from "urldefense.proofpoint.com" claiming to be http://www.mailcontrol.com
<https://urldefense.proofpoint.com/v2/url?u=http-3A__www.mailcontrol.com&d=CwMF-g&c=Gd9i_7dCjuCVW3mNb66s2Vujf-jTSUcMpPMNuR2h5uQ&r=iieMM-2VcBLfc9Q8HZ0ivKDh5550Vr8iv3OLoRFxFhXa3uB7-qb1gzGPBST1us1F&m=08ZK_N9Ppy3PWX1EyotOBQUZR-9IxD9XkPOVYKqbbHo&s=QMD-RI_eUiV6rPfFSsRm0ztMc1lEQ1Wofc31Fh_DhSg&e=>

Please consider the environment before printing this e-mail.

This email and any attachments are confidential and may be legally privileged (in which case neither is waived or lost by mistaken delivery). The contents of this email, including any attachments, are intended solely for the use of the individual or entity to whom they are addressed. Any unauthorised use is expressly prohibited. We do not waive any privilege, confidentiality or copyright associated with it. Brookfield collects personal information to provide and market our services (see our privacy policy at http://www.au.brookfield.com for more information about use, disclosure and access). Brookfield's liability in connection with transmitting, unauthorised access to, or viruses in this message and its attachments, is limited to re-supplying this message and its attachments
Message protected by MailControl: e-mail anti-virus, anti-spam and content filtering.
http://www.mailcontrol.com <http://www.mailcontrol.com/>

CAPITA

Agenda QEUH – Isolation Rooms

Project: **QEHB & RHC**

Date & Time: Tuesday 31st May 2016 at 2:00pm

Venue: Meeting Room 5, New FM & Lab Medicine Building, QEUH

Invitees:	**Ian Powrie** (IP)	NHSGGC Sector Estates Manager
	Douglas Ross (DRo)	Currie & Brown
	David Wilson (DW)	Brookfield Multiplex
	John McEwan (JMcE)	Hulley Sfm
	Dave Ramsay (DRa)	Capita
Apologies:	**David Loudon**	NHSGGC Director of Facilities and Capital Planning

Purpose Of Meeting: Due to recent formal concerns raised by ID Physicians & ICD colleagues at QEUH, NHSGGC wish to seek confirmation from Health Facilities Scotland (HFS) on certain matters relevant to SHPN 04 Supplement 1. In advance of this, the Team requires to be unified in support of any submission and supporting information. Consequently the proposed submission pack forms Part 1 of the agenda. Ian Powrie and John McEwan met on site on 25th May 2016 to view Isolation Rooms and John's Notes from that meeting forms Parts 2 and 3 of the agenda which includes relevant design and technical matters pertaining to the proposed submission.

1.0 Proposed Submission Pack to HFS

1.1 HFS Isolation room status

1.2 ZBP-XX-XX-SC-524-871

1.3 21 - AHU 16 SUPPLY ISOLATION ROOM REPORT with scheme

1.4 41 - 16-EF01 (1ST FLOOR ISOLATION) REPORT

2.0 Met with Ian this morning and had an initial review of some isolation rooms. As part of the exercise we discussed the following:

2.1 CCW-163 Bed 50 would be used as an exemplar to understand installed standard v Compliance (Also taking into consideration any PMIs or Derogations). – *Note*

2.2 Provision of "all" available validation documentation provided under the construction contract for Bed 50- *Action Ian Powrie*

2.3 Provision of "all" available verification documentation provided under the FM contract for Bed 50 - *Action Ian Powrie*

2.4 Confirmation on what design standards the rooms are built & validated to - *Action: Douglas Ross?*

3.0 Initial observations where access was gained (Using SHPN 04: Supplement 1 as reference until item 2.4 above is clarified) were as follows:

3.1 Room pressure was sitting at 8pa. This was at the magnehelic and no true readings were taken to verify. Range should be between 10 and 12 pa. (Appendix 2 Acceptance Testing)

3.2 No Alarms installed to indicate to clinical team of potential ventilation issues or remote alarm at nurses stations. Also demonstrated by low pressures having no indication (4.22)

3.3 The pressure stabiliser was not operating correctly. With corridor door open top blade remained open. Bottom blade appears to have no status change when doors are either open or closed.(4.21)

3.4 Door from lobby opens into room and in instance not closing properly leaving a greater leakage path and closing direction not as per exemplar within SHPN 04: Supplement 1. Sheet 2

3.5 Extract grille located within room ceiling and toilet. All air should be extracted via the toilet with low level transfer grille within door (4.12)

3.6 Bed location not as per exemplar within SHPN 04: Supplement 1. Sheet 2

3.7 Supply AHU (We used AHU 16 as example) is not identified with what room it serves and neither is the ductwork. (4.19 & SHTM03-01)

3.8 Air Permeability (Leakage): We were advised this was carried out using the room volumes and not the envelope volumes. This will be checked on receipt of information noted within 2.2 above.

4.0 Agree Further Actions

H & V
H & V
H & V

Commissioning Services Ltd
EST: 1975

Kilknowe Office,
16 Barrmill Road,
Galston,
Ayrshire, KA48HH.
TEL N°. 01563 821991
FAX N°. 01563 822220
E-Mail: talk2us@handv.co.uk

CONTRACT: NSGH, ADULT & CHILDRENS HOSPITAL – PLANTROOM 21

SYSTEM: 21 – AHU 16 SUPPLY ISOLATION ROOM

WITNESSING OF TESTING AND BALANCING

	Client Representative / Commissioning Manager	Client
Witnessed By:	David Wilson	
Representing:	Brookfield Multiplex	
Signature:	[redacted]	
Date:	26/8/13	
Witnessed By:		
Representing:		
Signature:		
Date:		

Remarks:

H & V
H & V
H & V

Commissioning Services Ltd
EST: 1975

Kilknowe Office,
16 Barrmill Road,
Galston,
Ayrshire, KA48HH.
TEL N°. 01563 821991
FAX N°. 01563 822220
E-Mail: talk2us@handv.co.uk

CONTRACT: NSGH, ADULT & CHILDRENS HOSPITAL – PLANTROOM 21

SYSTEM: 21 – AHU 16 SUPPLY ISOLATION ROOM

	AIR SYSTEMS PRE COMMISSIONING SHEET	✓	X	N/A
1.	Check AHU for damage and that all the components are secure	✓		
2.	Check the transit straps have been removed, if applicable	✓		
3.	Check pulleys are secure, tight, aligned and belts are correctly tensioned, if applicable			✓
4.	Check with the controls engineer that the system is available to run and that plant rotation is correct	✓		
5.	Check all ductwork/air terminals are fitted and that air regulating dampers are open	✓		
6.	Check louvres are fitted and clear from obstructions, if applicable	✓		
7.	Check fire dampers are open, if applicable	✓		
8.	Check the motor overloads are suitable and set			✓
9.	Check VAV or CAV boxes are installed correctly and ready for use.			✓
10.	Check the floor plenums are complete, if applicable			✓
11.	Complete commissioning test sheets.	✓		

COMMENTS

Hepa filters not fitted at time of test.

H & V
H & V
H & V

Commissioning Services Ltd
EST: 1975

Kilknowe Office,
16 Barrmill Road,
Galston,
Ayrshire, KA48HH.
TEL N°. 01563 821991
FAX N°. 01563 822220
E-Mail: talk2us@handv.co.uk

CONTRACT: NSGH, ADULT & CHILDRENS HOSPITAL – PLANTROOM 21

DIRECT DRIVE AHU TEST SHEET

SYSTEM: 21 – AHU 16 SUPPLY ISOLATION ROOM

AHU									
AHU Manufacturer		Barkell		Fan Size			Not Stated		
Fan Manufacturer		Flaktwoods		AHU Serial No			0200318439		
Fan Type		Plug		AHU Model N°.			GPEB-1-00-022-08-0		
		Design		**Test**				**% Design**	
Air Volume (L/S)		300		302				101	
External Static Pressure (Pa)		730		Inlet	90	Outlet	60	Total	150
Filter Test Data	Pre Filter (Pa)	Inlet	*	Outlet	*			ΔP	25
	Sec Filter (Pa)	Inlet	*	Outlet	*			ΔP	125

MOTOR				
Manufacturer	Flaktwoods	Output kW	0.75	
Serial N°	120521289	Motor Full Load Current	1.78	Amps
Voltage	400	Motor Running Current	0.8	Amps
	Design	**Test**		
Rotational Speed R.P.M	2840	2953		

DRIVE DETAILS			
Variable Speed Drive	Yes	Set Point	52Hz

Comments: *Filter pressures taken from magnehelic gauges.

Instrument Used (Ref N°.) HV03/1, HV03/4 & HV03/5

Date: 29/07/13	Engineer: Graeme Duncan & Stephen Murdoch	Sheet 3 of 6

H & V
H & V
H & V

Commissioning Services Ltd
EST: 1975

Kilknowe Office,
16 Barrmill Road,
Galston,
Ayrshire, KA48HH.
TEL N°. 01563 821991
FAX N°. 01563 822220
E-Mail: talk2us@handv.co.uk

CONTRACT: NSGH, ADULT & CHILDRENS HOSPITAL – PLANTROOM 21

DUCT VOLUME TEST SHEET **SYSTEM: 21 – AHU NO.16 SUPPLY ISOLATION ROOM**

VELOCITY PROFILE (taken facing air flow) **TEST HOLE LOCATION: PLANTROOM 21**

Test Hole Ref		Duct Dia (mm)		Duct Size (mm)		Duct Area		Design Air Volume		Design Air Velocity	
				Width x Height		M2		L/S		M/S	
TH Main		400				0.1257		300		2.39	
2.50	2.40										
2.50	2.60										
2.40	2.50										
2.30	2.30										
2.40	2.30										
2.40	2.20										
Velocity Sub Totals											
14.50	14.30										

Total Velocity	Number of Readings	Average Velocity	Measured Air Volume	% Design	Static Pressure
M/S		M/S	L/S		Pa
28.8	12	2.40	302	101	43

Remarks: Test Volume = 302 l/s ÷ Balometer Volume = 273 l/s = 1.11 Factor

Instrument Used: HV03/1

Date: 29/07/13 Engineer: Graeme Duncan & Stephen Murdoch Sheet 4 of 6

H & V
H & V
H & V

Commissioning Services Ltd
EST: 1975

Kilknowe Office,
16 Barrmill Road,
Galston,
Ayrshire, KA48HH.
TEL N°. 01563 821991
FAX N°. 01563 822220
E-Mail: talk2us@handv.co.uk

CONTRACT: NSGH, ADULT & CHILDRENS HOSPITAL – PLANTROOM 21

GRILLE TEST SHEET **SYSTEM: 21 – AHU 16 SUPPLY ISOLATION ROOM**

Design Data		Initial Test Data		Final Test & Regulation Data		
Terminal or Ref No	Design Air Volume l/s	Balometer Initial Air Volume l/s	Balometer Final Air Volume l/s	Balometer Factor	Balometer Final Air Volume l/s	% Design
SG054	300	269	273	1.11	303.03	101

Remarks: Grille pre-fixed with 524.

Instrument Used: HV03/15

Date: 29/07/13	Engineer: Graeme Duncan & Stephen Murdoch	Sheet 5 of 6

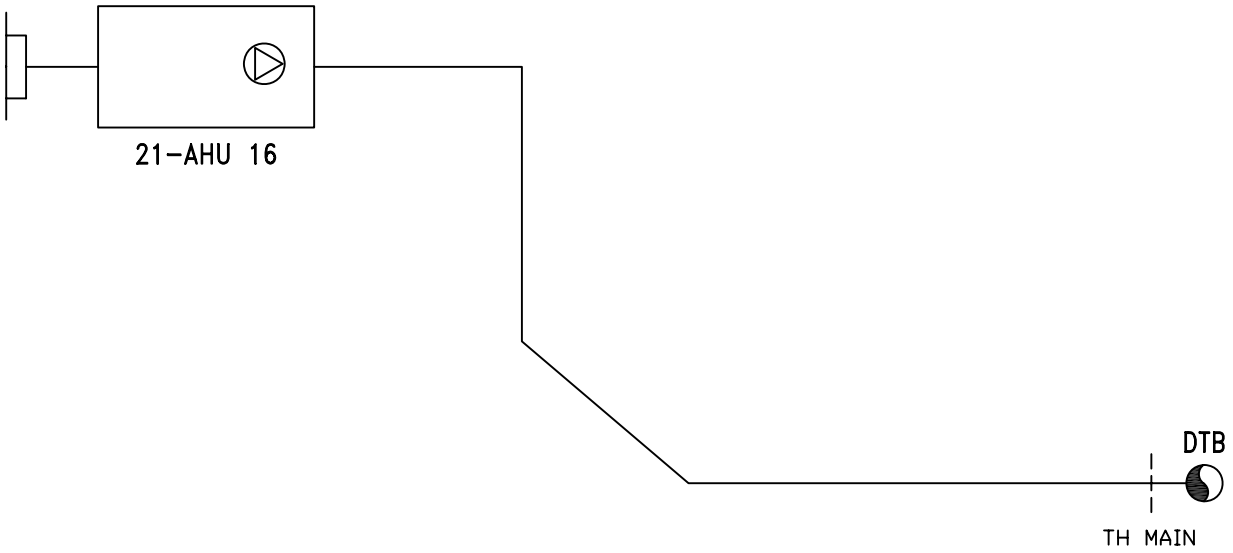

SHEET: 6 OF 6

H&V Commissioning Services Limited
Kilknowe Office
16 Barrmill Road
Galston
East Ayrshire, KA4 8HH
Tel : 01563 821991
A49618320
Fax: 01563 822220 email: talk2us@handv.co.uk

CONTRACT:
NSGH, ADULT & CHILDREN'S HOSPITAL - PLANTROOM 21

CLIENT:
MERCURY ENGINEERING UK

TITLE:
SCHEMATIC LAYOUT OF

21-AHU 16 SUPPLY - ISOLATION ROOM (FIRST FLOOR)

DRAWN: LH/GD

DATE: 29/07/13

DRG. No.: 5902/V43

H & V
H & V
H & V

Commissioning Services Ltd
EST: 1975

Kilknowe Office,
16 Barrmill Road,
Galston,
Ayrshire, KA48HH.
TEL N°. 01563 821991
FAX N°. 01563 822220
E-Mail: talk2us@handv.co.uk

CONTRACT: NSGH, ADULT & CHILDRENS HOSPITAL – PLANTROOM 41

SYSTEM: 41 – 16/EF01 (1ST FLOOR ISOLATION)

WITNESSING OF TESTING AND BALANCING

	Client Representative / Commissioning Manager	Client
Witnessed By:	Julie Miller	
Representing:	Brookfield Multiplex	
Signature:	[redacted]	
Date:	5/11/14	
Witnessed By:		
Representing:		
Signature:		
Date:		

Remarks:

H & V
H & V
H & V

Commissioning Services Ltd
EST: 1975

Kilknowe Office,
16 Barrmill Road,
Galston,
Ayrshire, KA48HH.
TEL N°. 01563 821991
FAX N°. 01563 822220
E-Mail: talk2us@handv.co.uk

CONTRACT: NSGH, ADULT & CHILDRENS HOSPITAL – PLANTROOM 41

SYSTEM: 41 – 16/EF01 (1ST FLOOR ISOLATION)

	AIR SYSTEMS PRE COMMISSIONING SHEET	✓	X	N/A
1.	Check AHU for damage and that all the components are secure	✓		
2.	Check the transit straps have been removed, if applicable	✓		
3.	Check pulleys are secure, tight, aligned and belts are correctly tensioned, if applicable			✓
4.	Check with the controls engineer that the system is available to run and that plant rotation is correct	✓		
5.	Check all ductwork/air terminals are fitted and that air regulating dampers are open	✓		
6.	Check louvres are fitted and clear from obstructions, if applicable			✓
7.	Check fire dampers are open, if applicable	✓		
8.	Check the motor overloads are suitable and set			✓
9.	Check VAV or CAV boxes are installed correctly and ready for use.			✓
10.	Check the floor plenums are complete, if applicable			✓
11.	Complete commissioning test sheets.	✓		

COMMENTS:

H & V
H & V
H & V

Commissioning Services Ltd
EST: 1975

Kilknowe Office,
16 Barrmill Road,
Galston,
Ayrshire, KA48HH.
TEL N°. 01563 821991
FAX N°. 01563 822220
E-Mail: talk2us@handv.co.uk

CONTRACT: NSGH, ADULT & CHILDRENS HOSPITAL – PLANTROOM 41

DIRECT DRIVE FAN TEST SHEET

SYSTEM: 41 – 16/EF01 (1ST FLOOR ISOLATION)

FAN										
AHU Manufacturer		Not Applicable		Fan Size			Not Stated			
Fan Manufacturer		Dynair		AHU Serial No			Not Stated			
Fan Type		Axial		AHU Model N°.			AL225/4TO55KLG			
		Design		**Test**				**% Design**		
Air Volume (L/S)		230		234				102		
External Static Pressure (Pa)		260		Inlet	133	Outlet	26	Total	159	
Filter Test Data	Pre Filter (Pa)	Inlet	N/A	Outlet	N/A			ΔP	N/A	
	Sec Filter (Pa)	Inlet	N/A	Outlet	N/A			ΔP	N/A	

MOTOR				
Manufacturer	Cantoni	Output kW	0.55	
Serial N°	12436007	Motor Full Load Current	1.9	Amps
Voltage	400	Motor Running Current	1.29	Amps
	Design	**Test**		
Rotational Speed R.P.M	1456	1223		

DRIVE DETAILS			
Variable Speed Drive	Yes	Set Point	42 Hz

Comments: N/A – Not Applicable.

Instrument Used (Ref N°.) HV01/1, HV01/4 & HV01/5

Date: 1/10/14	Engineer: Ross Parker	Sheet 3 of 6

H & V
H & V
H & V

Commissioning Services Ltd
EST: 1975

Kilknowe Office,
16 Barrmill Road,
Galston,
Ayrshire, KA48HH.
TEL N°. 01563 821991
FAX N°. 01563 822220
E-Mail: talk2us@handv.co.uk

CONTRACT: NSGH, ADULT & CHILDRENS HOSPITAL – PLANTROOM 41

DUCT VOLUME TEST SHEET

SYSTEM: 41 – 16/EF01 (1ST FLOOR ISOLATION)

VELOCITY PROFILE (taken facing air flow)

Test Hole Ref		Duct Dia (mm)		Duct Size (mm)		Duct Area		Design Air Volume		Design Air Velocity	
				Width x Height		M2		L/S		M/S	
MAIN TH		315				0.0779		230		2.95	
2.00	3.00										
2.30	3.10										
2.70	3.10										
3.50	3.40										
3.40	3.20										
3.20	3.10										
Velocity Sub Totals											
17.10	18.90										

Total Velocity	Number of Readings	Average Velocity	Measured Air Volume	% Design	Static Pressure
M/S		M/S	L/S		Pa
36	12	3.00	234	102	37

Remarks: Test Volume = 234 l/s ÷ Balomete Volumer = 200 l/s = 1.17 Factor

Instrument Used: HV01/1

Date: 30/10/14	Engineer: Ross Parker	Sheet 4 of 6

H & V
H & V
H & V

Commissioning Services Ltd
EST: 1975

Kilknowe Office,
16 Barrmill Road,
Galston,
Ayrshire, KA48HH.
TEL N°. 01563 821991
FAX N°. 01563 822220
E-Mail: talk2us@handv.co.uk

CONTRACT: NSGH, ADULT & CHILDRENS HOSPITAL – PLANTROOM 41

GRILLE TEST SHEET

SYSTEM: 41 – 16/EF01 (1ST FLOOR ISOLATION)

Design Data		Initial Test Data		Final Test & Regulation Data		
Terminal or Ref No	Design Air Volume l/s	Balometer Initial Air Volume l/s	Balometer Final Air Volume l/s	Balometer Factor	Balometer Final Air Volume l/s	% Design
EG-012	230	245	200	1.17	234	102

Remarks:

Instrument Used: HV01/15

Date: 30/10/14	Engineer: Ian McKenzie	Sheet 5 of 6

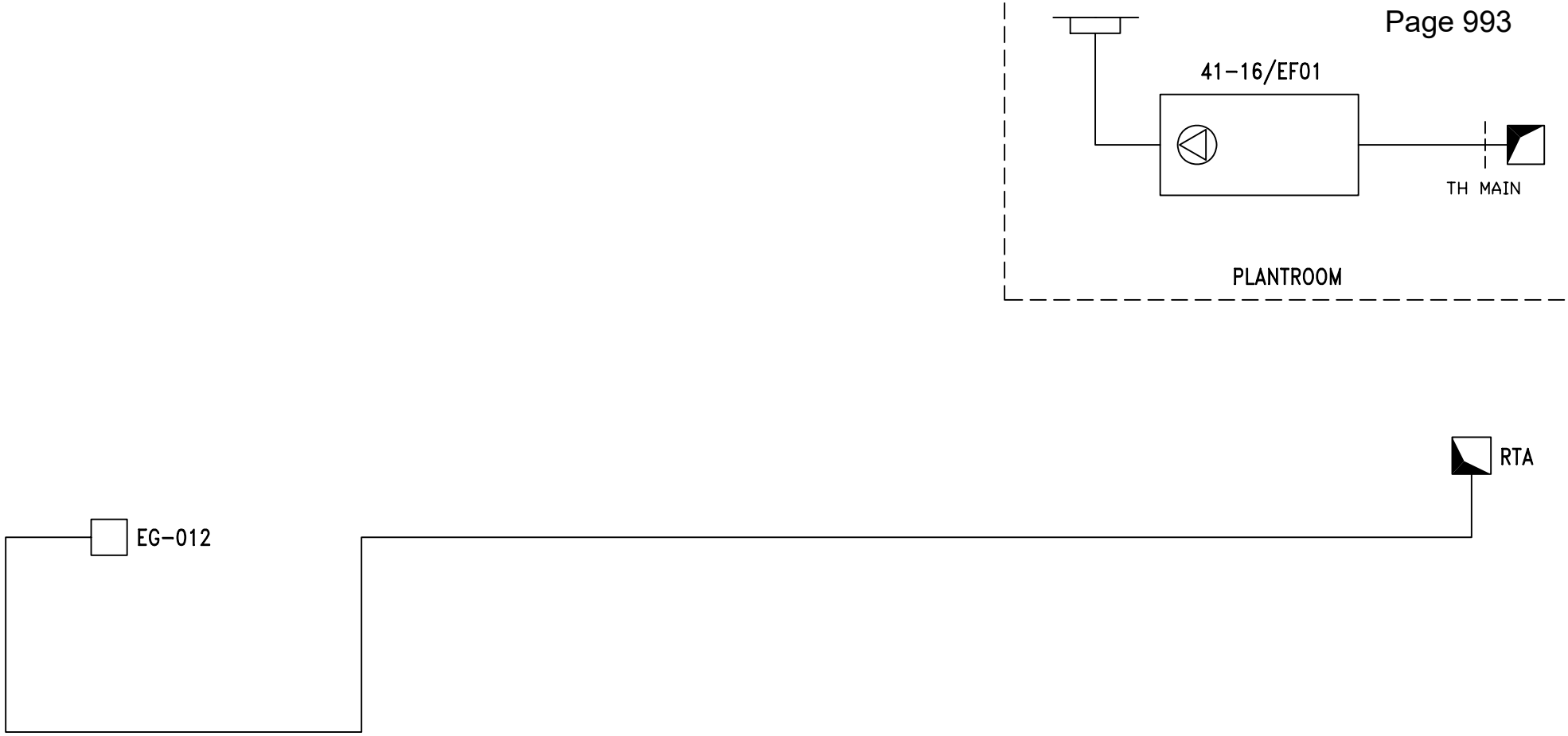

H&V Commissioning Services Limited
Kilknowe Office
16 Barrmill Road
Galston
East Ayrshire, KA4 8HH
Tel : 01563 821991
Fax: 01563 822220
email: talk2us@handv.co.uk

CONTRACT:
NSGH, ADULTS & CHILDREN'S HOSPITAL - PLANTROOM 41

CLIENT:
MERCURY ENGINEERING UK

TITLE:
SCHEMATIC LAYOUT OF

41-16/EF01 1ST FLOOR ISOLATION

DRAWN: LH/RP
DATE: 12/11/14
DRG No.: 5902/V45
SHEET: 6 OF 6

Due to recent formal concerns raised by our ID Physicians & ICD colleagues at the Queen Elisabeth University Hospital, I would like to seek confirmation from Health Facilities Scotland on the following questions.

Question 1:

Is the ventilation design criteria set out in SHPN 04 supplement 1: Isolation Facilities in Acute Settings As detailed in Table 1: Isolation Suite – Ventilation Parameters and Sheet 2: New build single room with en-suite facilities and bed-access lobby (isolation suite), suitable for safe nursing of patients with the one of the following conditions?

1. Multi Drug Resistant TB (MDRTB)?
2. MERS?
3. H1N1?

Question 2:

If the above design criterion is suitable for safe nursing of patients with any one of these conditions please advise if the following design variant is equally suitable?

See attached schematic ref: ZBP-XX-XX-SC-524-871, along with a set of commissioning documents for a representative Critical Care Ward (CCW), isolation room ventilation arrangement within the QEUH.

The following variations should be noted:

1. The main extract is located in the isolation room.
2. The alarm system to the nurse's base was deleted, including:
    - Room Lobby pressure gauge alarm.
    - The extract air flow switch; alarm to the nurses' base.
    - The supply air flow switch; alarm to the nurses' base.
3. The transfer grille between the isolation room and the en-suite was deleted.

Notes:
• This drawing is copyright.
• Do not scale dimensions from this drawing.
• All discrepancies on this drawing are to be reported to the architect.
• Do not modify any element of this drawing.
• Use drawing only for purpose(s) issued.

No	Design Risk Register

NOTES

1. FOR SYMBOLOGY REFER TO ZBP DRG No. ZBP-NX-XX-DT-SW-001
2. THIS DRAWING TO BE READ IN CONJUNCTION WITH ALL CONTRACT DOCUMENTATION

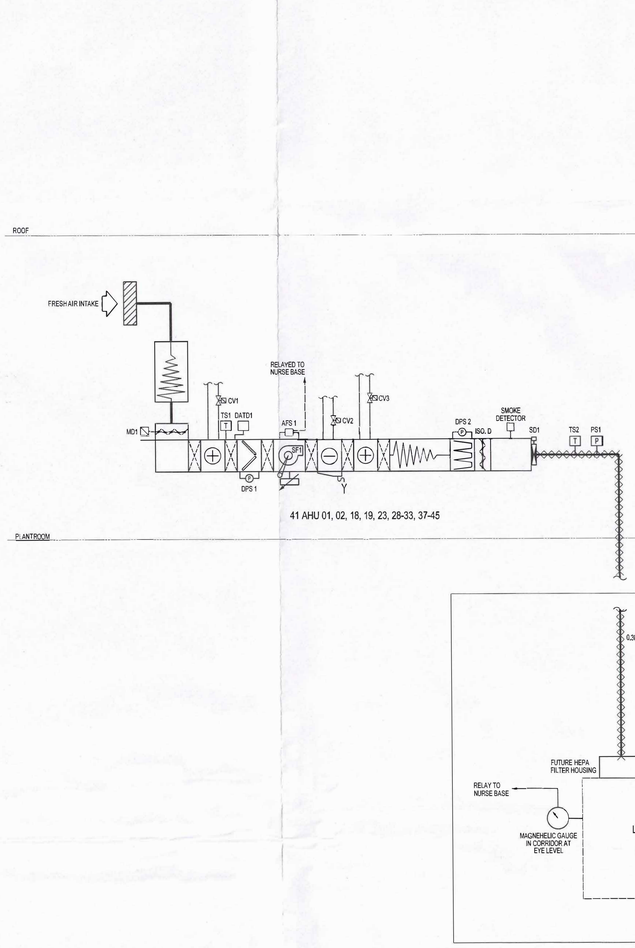

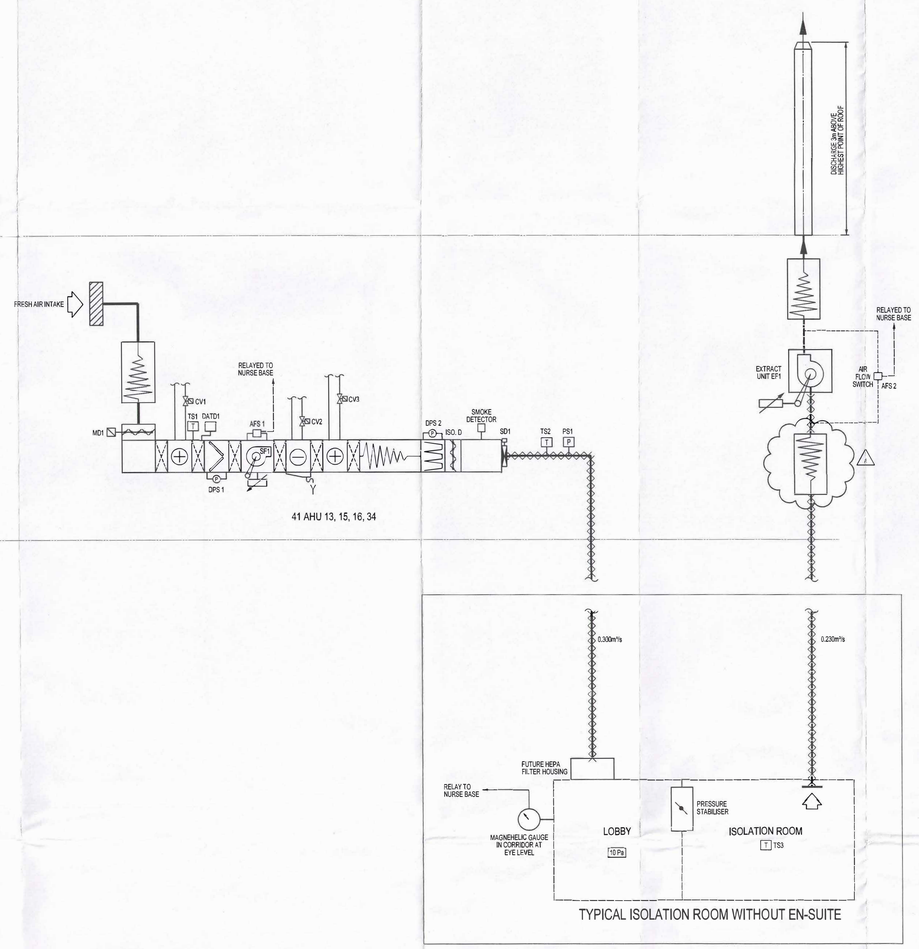

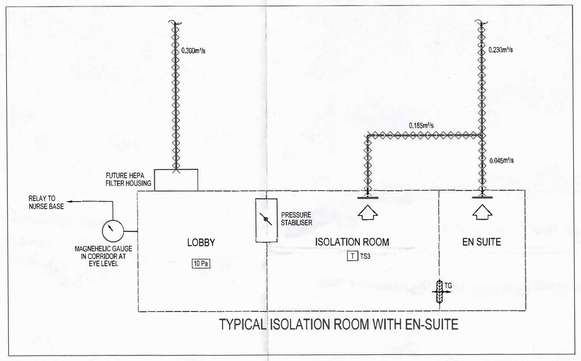

PANEL AT NURSE BASE (PAN 1)

- NORMAL
- FAULT - ALARM / MUTE
- LOBBY PRESSURE DIFFERENTIAL
- ROOM TEMPERATURE

LEGEND

- SUPPLY DUCTWORK
- EXTRACT DUCTWORK
- DIRTY EXTRACT DUCTWORK
- FIRE RATED DUCTWORK

NEW SOUTH GLASGOW HOSPITALS
TS | ACTION
09 NOV 2012
ACTION
SUPPLY TEAM

Rev	Date	Revision Notes	Drn	Chk
A	24.10.12	ISSUED FOR CONSTRUCTION T3 REVISED AS INDICATED	AEM	AP
01	12/09/12	ISSUED FOR TENDER T1	MW	AP

NEW SOUTH GLASGOW HOSPITALS LABORATORY PROJECT
NHS ADULT & CHILDREN'S HOSPITALS - DOCUMENT REVIEW
Representative Name | Date | Category | Comment
D HALL 6/12/12 A [redacted]
Comment
NO COMMENT
NHS
Brookfield MULTIPLEX BM
CONTRACTOR DOCUMENT REVIEW
New NSHG BUILDING
Consultant Multiplex Construction Only
1 Comments
2 Revise & Re-submit
3 Reference Only
Contractor [redacted]
Date 13.12.12
Brookfield MULTIPLEX BM
Zisman Bowyer & Partners LLP Consulting Engineers
www.zbp.co.uk

Project
NEW SOUTH GLASGOW HOSPITALS (NSGH) PROJECT

Drawing Title
MECHANICAL SERVICES
NCH CRITICAL CARE ISOLATION ROOMS
VENTILATION SCHEMATIC
PLANTROOM 41

Job No	Drawn	Checked	Approved
2900	VLT	AJP	AP
Status	Date	Scale @ A0	
CONSTRUCTION T3	DEC '11	NTS	

Drawing No.						Rev
Origin	Zone	Level	Type	Content	Sequential	
ZBP	XX	XX	SC	524	871	A

PLOTTED: 7/08/2012 @ 14:28:05 By:adonnell
DWG FILE: 2900 Stage 3\ZBP Drawings\Schematics\Mechanical\ZBP-XX-XX-SC-524-871.dgn

A49618520

Request for Information - Section 21 Notice - No 18 (Ventilation Systems)

5. Isolation rooms:
In respect of all isolation rooms in the QEUH, please provide a schedule of all isolation rooms with the following information:

a) **Where the room is situated**
b) **What patient group was intended to be accommodated in the room at handover**
c) **Following handover, what changes were made to the ventilation systems in the room**
d) **A description of the patient groups who are using the rooms now.**

This response will address items a) and c) for the RHC. Responses in relation to isolation rooms in the QEUH and in relation to items b) and d) are provided separately.

This response should be read in conjunction with RFI S21 No 10 submissions provided in December 2022/January 2023. Information previously provided may not been duplicated in the response below.

The following acronyms are used within this document:
PPVL refers to Positively Pressured Ventilated Lobby
NPVL refers to Negatively Pressure Ventilated Lobby
PPIR refers to Positively Pressured Isolation Room
NPIR refers to Negatively Pressured Isolation Room

There are 24 isolation rooms in the RHC.

Ward 2A
The table below identifies where the Isolation rooms in Ward 2A on the 2nd floor are situated.

Room Ref	Bed Ref	Isolation Room Current Designation
SCH 009	Bed 22	PPVL
SCH 011	Bed 23	NPVL
SCH 018	Bed 24	PPVL
SCH 019	Bed 25	PPVL
SCH-067	Bed 18	PPIR
SCH 072	Bed 19	PPIR
SCH 074	Bed 20	PPIR
SCH 066	Bed 17	PPIR

In ward 2A there are 8 isolation rooms. At handover, these rooms were all designed as PPVL rooms. In June 2015, and prior to patients being placed in the rooms, HEPA filtration was installed in the supply grilles located in the lobbies. This was a physical change to the ventilation system as this took place after handover.

Between January and March of 2018, 4 isolation rooms in ward 2A were converted from PPVL to PPIR. These rooms were identified as SCH-067 Bed 18, SCH-072 Bed 19, SCH-074 Bed 20 and SCH-066 Bed 17.

In the original configuration the extract grille was located in the patient room and the supply grille located in the lobby. Following reconfiguration, the supply grille is in the patient room and the extract grille is relocated from the room to the corridor outside the lobby. The extract in the en-suite was not altered. New pressure relief dampers were installed to allow air to flow from patient room to lobby to corridor. On completion of these works, the rooms were validated.

From 2019 the Ward 2A refurbishment programme[1] included the replacement of all 8 AHUs which served the isolation rooms. One of the remaining four PPVL rooms, SCH 011 Bed 23, was converted to a NPVL which involved relocating the extract grille from the patient room to the lobby and installing 2 HEPA filtered supply grilles within the patient room.

Ward 2A isolation rooms now consist of 3 PPVL, 1 NPVL and 4 PPIR as identified in the table above.

RHC Isolation rooms out-with Ward 2A

We have no record of HEPA filters having been installed in the remaining 16 PPVL rooms within RHC when the hospital was handed over. Where a HEPA filter has been fitted in an isolation room since handover, this is a physical change to the system. This response is based on the earliest dated verification reports which evidence the presence of a HEPA filter test in an isolation room lobby.

Clinical Decision Unit
The table below identifies where the Isolation Rooms within the Clinical Decision Unit (CDU) on the ground floor are situated.

Room Ref	Bed Ref	Isolation Room Current Designation
OBW 050	Bed 17	PPVL
OBW-051	Bed 18	NPIR

In CDU there are two isolations rooms, at handover both rooms were PPVL.

[1] Read in conjunction with response to Q1 RHC Ward 2A and 2B

The verification report for OBW 050 records that in August 2021 a terminal HEPA filter is present in the lobby. There have been no further changes to this ventilation system.

The verification report for OBW 051 records that a terminal HEPA filter was present in the lobby supply grille in September 2018 while the room was operating as a PPVL. In May 2019 OBW 051 was converted from a PPVL to a Negative Pressure Isolation Rooms (NPIR) at the request of Consultant Physicians and Infection Control Doctors (ICDs). The ventilation system changes were the installation of a supply grille in the patient room and an extract grille in the lobby. These were additional to the existing grilles. The system was then re-balanced to ensure the flow of air is always from the corridor or lobby to the patient room. Within the plant rooms, gas tight dampers were fitted to both supply and extract ductwork allowing them to be sealed for disinfection if required.

Cardiology Ward

The table below identifies where the Isolation rooms within the Cardiology Ward (CAR) on the first floor are situated.

Room Ref	Bed Ref	Ward No	Isolation Room Current Designation
CAR 016	Bed 13	1E	PPVL
CAR 011	Bed 14	1E	PPVL

In CAR there are two isolations rooms which are and have been PPVL rooms since handover.

The verification report for CAR 016 records that in September 2018 a terminal HEPA filter was present in the lobby supply grille. There have been no further changes to this ventilation system.

The verification report for CAR 011 records that in September 2018 a terminal HEPA filter was present in the lobby supply grille. There have been no further changes to this ventilation system.

Paediatric Intensive Care Unit

The table below identifies where the Isolation rooms within the Paediatric Intensive Care Unit (PICU) on the first floor are situated.

Room Ref	Bed Ref	Ward No	Isolation Room Current Designation
CCW	Bed 12	1D	PPVL
CCW	Bed 17	1D	PPVL
CCW	Bed 18	1D	PPVL
CCW	Bed 5	1D	NPIR

In PICU, all four isolations rooms were PPVL at handover. One was subsequently changed.

The verification report for CCW Bed 12 records that a terminal HEPA filter was first fitted and tested in the lobby supply grille in November 2017 and re-tested in July 2020. There have been no further changes to this ventilation system.

The verification report for CCW Bed 17 records that a terminal HEPA filter was not present in the lobby supply grille until November 2020. There have been no further changes to this ventilation system.

The verification report for CCW Bed 18 records that a terminal HEPA filter was not present in the lobby supply grille until June 2020. There have been no further changes to this ventilation system.

The verification report for CCW Bed 5 records that a terminal HEPA filter was not present in the lobby supply grille prior to the room being converted from PPVL to NPIR in May 2019. The room was converted at the request of Consultant Physicians and ICDs. The ventilation system changes were the installation of a supply grille in the patient room and an extract grille in the lobby. These were additional to the existing grilles. The system was then re-balanced to ensure the flow of air is always from the corridor or lobby to the patient room. Within the plant rooms, gas tight dampers were fitted to both supply and extract ductwork allowing them to be sealed for disinfection if required.

Acute Receiving Ward

The table below identifies where the Isolation rooms within the Acute Receiving Ward (ARU) on the second floor are situated.

Room Ref	Bed Ref	Ward No	Isolation Room Current Designation
ARU 108	Bed 5	2C	PPVL
ARU 109	Bed 6	2C	NPIR

In ARU there are two isolations rooms which at handover were PPVL rooms. One was subsequently changed.

The verification report for ARU 108 records that a terminal HEPA filter was not present in the lobby supply grille until May 2022. There have been no further changes to this ventilation system.

The verification report for ARU 109 reports that in September 2018 a terminal HEPA filter was present in the lobby supply grille. In May 2019 ARU 109 was converted from a PPVL to a NPIR at the request of Consultant Physicians and ICD's. The ventilation system changes were the installation of a supply grille in the patient room and an extract grille in the lobby. These were additional to the existing grilles. The system was then re-balanced to ensure the flow of air is always from the corridor or lobby to the patient room. Within the plant rooms, gas tight dampers were fitted to both supply and extract ductwork allowing them to be sealed for disinfection if required.

Level 3

There are six isolations rooms located on the third floor which are PPVL and have been since handover.

The table below indicates where the Isolation rooms within Level 3 are situated.

Room Ref	Bed Ref	Ward No	Isolation Room Current Designation
GW3 053	Bed 16	3A	PPVL
GW3 054	Bed 15	3A	PPVL
GW2 022	Bed 19	3B	PPVL
GW1 055	Bed 9	3C	PPVL
GW3 058	Bed 10	3C	PPVL
GW2 055	Bed 5	3C	PPVL

The verification report for GW3 053 records that a terminal HEPA filter was not present in the lobby supply grille until April 2022. There have been no further changes to this ventilation system.

The verification report for GW3 054 records that in September 2018 a terminal HEPA filter was present in the lobby supply grille. There have been no further changes to this ventilation system.

The verification reports for GW2 022 records that a terminal HEPA filter was not present in the lobby supply grille until April 2020. There have been no further changes to this ventilation system.

The verification report for GW1 055 records that a terminal HEPA filter was fitted in the lobby supply grille and tested in November 2017. There have been no further changes to this ventilation system.

The verification report for GW3 058 records that in March 2019 a terminal HEPA filter was present in the lobby supply grille. There have been no further changes to this ventilation system.

The verification report for GW2 055 records that a terminal HEPA filter was not present in the lobby supply grille until July 2020. There have been no further changes to this ventilation system.

Request for Information - Section 21 Notice - No 18 (Ventilation Systems)

11. Validation: For the period 2014 to 2015, please provide: -

a) An explanation of all validation undertaken in relation to the ventilation system, when and where it was carried out and what it showed.

b) A list should be provided of all documentation available to vouch the validation of the ventilation system. Where there are gaps in these records, an explanation should be provided.

c) A list of witnesses involved in validation of the ventilation system.

At handover in January 2015, there were no validation reports for any of the systems serving wards and isolation rooms identified in this request. We have excluded from this response any explanation of validation to the Theatres. Validation was not part of the Contractor duties.

The guidance in SHTM 03-01 Part A – Design and Validation is that Validation should "*be carried out by a suitably qualified independent Authorised Person appointed by the NHS Board."* No AP was appointed and there are no Validation records for the period 2014 to 2015 other than those listed below.

In April 2015 the Safe Change Units which extract air from the isolation rooms in Critical Care were validated by Camfil. Several units failed the initial validation and a re-validation took place in May 2015. The validation certification was provided by Camfil Engineers and certification records it was reviewed by David Wilson of Brookfield Multiplex.

Following works to upgrade the supply motor within the AHU63 which supplies air to Ward 4B, the ventilation system serving the area was validated in October 2015 by H&V Commissioning. The report provided includes room pressures, supply and extract air volumes and this section of the report is recorded as witnessed by Julie Miller of Brookfield Multiplex.

Royal Hospital for Children

Ward 2a Isolation Rooms

Tender

Draft for Comment

May 2017

Hulley & Kirkwood Consulting Engineers Ltd
Head Office
Watermark Business Park
305 Govan Road
Glasgow
G51 2SE

(t): 0141 332 5466
(f): 0870 928 1028
(e): hk.glasgow@hulley.co.uk
(w): www.hulley.co.uk

Prepared By:	Colin Peacock
Authorised By:	John McEwan
Revision:	Draft
Date:	May 2017
File Location:	K:\70520

Royal Hospital for Children

Ward 2a Isolation Rooms

Tender

Draft for Comment

April 2017

REV	DESCRIPTION	PREPARED BY	DATE
Issue No. 1	First issue - Draft	C.Peacock	May 2017

Index:

1.0 Introduction 5

2.0 Existing Systems Overview 6

3.0 Modification from PPVL to Positive Pressure Isolation within Ward 2A 7

4.0 Description of Works 8

5.0 Summary Bill 12

APPENDICES 13

Appendix A – Positive Pressure Isolation Schematic 13
Appendix B – HAI-SCRIBE 14

1.0 Introduction

Patient isolation facilities are required in healthcare premises to prevent Healthcare Associated Infection (HAI). There are two main types of patient isolation:

(a) Isolation to protect other patients and staff from a patient with an infection.

(b) Isolation to protect patients from exposure to infection.

Ward 2a of the children's hospital has currently isolation rooms constructed as Positive Pressure Ventilated Lobby.

Hulley & Kirkwood have been asked by Greater Glasgow & Clyde NHS Estates to review the requirements for changing of 4No. PPVL isolation rooms (17,18,19 & 20) within Ward 2A to positive pressure isolation rooms for the continued use for transplant and severely immune-compromised patients. This tender details the requirement to carry out this works.

It is important to note that the works will be carried out in a live ward environment and management of cleanliness is a critical factor to ensure no cross contamination within the live ward environment. Contractor will be required to demonstrate experience within similar environments using previous project references.

The project is to be priced based on the following 2no potential scenarios:

(a) All 4no rooms are available to work in (17,18,19 & 20)
(b) 2no rooms are available (17 & 18) and on successful validation and acceptance by clinical team rooms (19 & 20) will be made available.

2.0 Existing Systems Overview

The existing 4no isolation rooms are single bed rooms with PPVL and en-suite. These are located within Ward 2a (Schiehallion). Refer to drawing 70520(57)01 Proposed Isolation Rooms Ventilation Modifications within appendix A.

Each room has its own dedicated supply & extract systems:

Room 17 – Supply AHU 41/33 & Extract 41-33-EF01

Room 18 – Supply AHU 41/32 & Extract 41-32-EF01

Room 19 – Supply AHU 41/31 & Extract 41-31-EF01

Room 120 – Supply AHU 41/30 & Extract 41-30-EF01

ME-ZC-02-PL-524-508_Z1.pdf

The as-built ductwork layout ME-ZC-02-PL-524-508 Rev Z1 Identifies the current ventilation distribution within the 4no isolation rooms. Contractor will be responsible for verifying arrangements prior to going into manufacture for new ventilation installations.

3.0 Modification from PPVL to Positive Pressure Isolation within Ward 2A

As noted in the introduction there would not appear to be any published UK NHS guidance on the design of Positive Pressure (PP) Isolation rooms. However it is reasonable to take guidance from SHTM 03-01 and in particular the guidance pertaining to operating theatre ventilation system design.

SHTM 03-01 Part A Table A4 offers advice on air volume flows through doorways between rooms of different cleanliness in order to control cross-contamination. The table advises that an air flow of 0.28m3/s is adequate to offer protection to a single doorway between a room and another one level lower in the hierarchy of cleanliness. With reference to SHTM 03-01 Part A Table A2, if one assumes the patient bedroom to be 'Sterile', the lobby as 'Clean' and the ward corridor as 'Transitional' then it can be concluded that a cascading air flow from the isolation room to the ward corridor at a rate of 0.28m3/s is adequate to prevent cross-contamination. This is based on the premise that when the rooms are in use there will be a management procedure in place such that the 'corridor to lobby' and the 'lobby to bedroom' doors are not opened coincidentally. Furthermore it is assumed that the half door of the 'pair and a half' door sets is only used for bed transport and when the room is in use only the single door is opened.

Since the supply air plants appear to be capable of delivering at least 0.3m3/s to the rooms it is reasonable to allocate 0.28m3/s of this volume to the door protection leaving 0.02m3/s to the en-suite extract. While the 'en-suite' may be classed as 'dirty' in the hierarchy of cleanliness and hence requiring an air flow of 0.47m3/s for 'sterile' to 'dirty' protection, according to SHTM 03-01 Part A Table A4, it is assumed that because the en-suite is only used by the patient it does not present a risk to the patient. The extract rate of 0.02m3/s from the en-suite will maintain the room at a negative pressure with respect to the bedroom and will significantly exceed the air change rate stated in SHTM 03-01 Part A Table A1 for a single room en-suite.

As the rooms have been identified as accommodating severely immune-compromised patients and in order to create the cascade of door protection it is proposed that the existing supply system be modified to re-locate the HEPA filtered supply terminal to the bedroom. (Refer to Drg:70520(57)01 within Appendix A).The existing pressure stabiliser damper installed over the 'lobby to bedroom' door shall be reversed to allow air flow from the room to the lobby at a 10Pa pressure differential. A new pressure stabiliser damper sized for 10Pa differential pressure shall be installed in the wall between the lobby and corridor. The lobby will have a positive pressure differential from lobby to corridor. This provision will create a continuous air flow from the bedroom to the corridor with a target 20Pa positive pressure differential between the bedroom and the ward corridor.

The extract system shall be altered to divert the extract duct currently extracting air from the bedroom to instead extract from the corridor. This will balance the supply air flow and ensure that the other ventilation systems serving the ward are not adversely affected. The extract terminals shall be replaced with terminals with integrated volume control dampers that can be accessed from below through the grilles such that the existing duct mounted volume control dampers can be removed along with any associated ceiling access hatches.

The existing dial pressure gages shall be replaced with gauges with a - 30/0/30Pa scale and shall have the room side impulse tube replaced from the lobby to the patient bedroom to give visual indication of the maintained positive pressure within the bedroom to corridor.

4.0 Description of Works

4.1 Site Accommodation

Space shall be made available externally for a single container to facilitate site office / storage. Refer to the Hai-scribe document.

The contractor may use the ‘on site’ facilities for toilets and catering provided that works clothing is removed before using any catering facilities.

No materials or equipment to be stored out with the site accommodation or the works area.
Works area to be secure at all times.

Working hours shall be 8am to 6pm 7 days per week.

4.2 Isolate Works Area

The contractor shall provide a supply / install and seal a solid partition HAI containment to the site that shall be effectively air tight to prevent migration of dust. Expectations of this hoarding are as indicated in the following photograph. This installation shall be by Messrs Kwik Klik (www.kwik-klik.co.uk) or equal and approved.

Example of expectation for isolating construction from Operational

Suitable signage shall be provided to indicate works area / no entry & contact details.

A magnahelic gauge shall be taken from one of the existing rooms and shall be instated in the temporary partition to offer indication of maintained negative pressure.

4.3 Create Safe Area

The existing room supply AHU plant shall be shut down and the associated dampers closed. The existing extract systems shall be maintained in operation to negatively pressurise the works area with visible indication via the magnahelic gauge installed within the works area temporary partition. The extract fan speed shall be adjusted on the existing frequency converter drives to maintain a negative pressure with the entrance door from lobby to corridor closed.

4.4 Builderswork Elements

All builderswork shall form part of the contract and shall comprise all alterations to ceilings, forming of holes in partitions, fire sealing, sealing perimeter to achieve air permeability test, making good, decoration and final clean.

Potentially supporting Multiplex access to repair / replace damaged window blinds, while rooms are out of service.

For the purposes of tender it shall be assumed that the existing solid ceilings to the bedroom, ensuite and lobby are to be down taken and reinstated in their entirety. This will be reviewed once ductwork routes are coordinated.

A hole shall be formed in the wall between the lobby and corridor for each room for the installation of a new pressure stabiliser.

Form new holes in walls above ceilings for diverted ductwork.

Installation of a new termination for the magnahelic impulse tube within the bedroom ceiling.

Installation of the supply diffuser within the bedroom ceiling.

Installation of the extract grille in the existing tiled corridor ceiling.

Works associated with dropping a new electrical conduit down the existing partition between bedroom and corridor.

Installation of the new alarm panel at the nurses station. For the purposes of tender it shall be assumed that the existing partition shall require reinforcement for mounting the alarm panel.

Re-install all existing ceiling mounted services including but not limited to light fittings and smoke detectors.

Carry out room air leakage testing ***(Provide name – JM Action)***

On completion of works the contractor shall provide a clinical clean of the complete works area. On acceptance of cleanliness (Visual) rooms will be handed over to the Hotel Services team for sparkling clean and Board sampling.

4.5 Ductwork and Grille Modifications

Take down existing supply diffuser from the bedroom lobbies and relocate to the bedroom in a central location above bed.

Divert existing 315mm diameter galvanised spiral wound supply duct from bedroom lobby into bedroom and connect to supply diffuser. No flexible connections to be utilised.

Supply and install new HEPA filter in supply diffuser housing. Provide challenge port at AHU discharge.

Modify ensuite 160mm diameter galvanised spiral wound duct to remove volume control damper.
Supply and install a new ensuite extract grille suitable of 20 l/s extract and with face adjustable integral VCD and removable core.

Take down existing extract grille from the bedroom with associated VCD and relocate grille and VCD to the corridor.

Divert existing 315mm diameter galvanised spiral wound extract duct from bedroom into corridor and connect to extract grille.

Take down existing pressure stabiliser damper in bedroom/lobby wall and reinstate with reverse air flow or otherwise reverse blades if damper configuration permits.

Supply and install a new pressure stabiliser damper in wall between corridor and

4.6 Electrical/Controls Installations

Supply and install a new centralised alarm panel at the nurse base. This panel shall be designed, supplied and installed by Schneider Controls or their approved contractor. The panel shall be surface mounted and stove enamel white or equal finish. The panel shall incorporate a sounder and mute for common alarm condition and green (healthy) and red (alarm) lamps for each room. For each room the panel shall monitor terminal HEPA healthy condition, room magnahelic pressure healthy condition (time delay required to allow for open door conditions) and supply AHU and extract fan healthy condition. The panel shall interface with the existing building BMS for receipt of information on the plant status and relay of information for the room status. The panel supplier shall allow for graphics and software update at the head end to accommodate the alterations.

Supply and install a new magnahelic gauge mounted on the corridor wall outside each room with a -30/0/30Pa scale. The gauge shall offer visual indication of the room pressure (+20Pa design) via a dial face or digital readout and a tell tale interface with the alarm/monitoring system for room low pressure.

Supply and install an individual sounder and mute alarm on the corridor wall of each room to provide local individual room specific alarm.
Supply and install all necessary impulse tube, cable, containment, field mounted equipment and power supply from local distribution as required to provide a fully operational installation.

4.7 Test & Commission

Pressure test the supply and extract ductwork installations to DW/143 medium pressure.

Clean supply and extract ductwork systems for all bedrooms to TR/19 PDI Level 3.

Set to work existing supply and extract systems and balance to achieve design air flows as stated on drawing 70520(57)01.

DOP test the HEPA filters.

Adjust pressure stabiliser blades as required for stability under steady state conditions.
Function check all alarm interfaces

4.8 Validation and Demonstration

Validation to be carried out by H&V Commissioning or equal and approved.

All air sampling and microbiological sampling shall be carried out by others. Does not form part of this contract

4.9 O&M Information

Obtain and modify the existing ventilation installation drawings to reflect the modifications and provide in hard copy, pdf and editable electronic format.

Provide hard copy and pdf all relevant manufacturer's literature, commissioning results and test certificates.
Supply in hard copy and pdf all electrical wiring and panel diagrams.

All hard copy information to be provided in hard backed ring binder folder complete with all contractor and sub-contractor contact details.
Demonstration shall comprise two half day sessions. One session shall be provided for the clinical staff to inform them on the operation of the rooms from a user perspective. One session shall be provided for the NHS Estates staff to inform them on the technical operation of the rooms.

4.10 Client Liaison

Prior to and throughout the works duration the contractor shall allow for daily liaison with the NHS project manager and clinical stall as required.

5.0 Summary Bill

Item	Description	Cost (£)
1	Builderswork including decoration and clinical clean	
2	Ventilation ductwork including grilles, dampers etc.	
3	Alarm panel installation including room alarms, BMS interface, head end software and graphics update, magnahelics, tubing, cable containment and power.	
4	Commissioning	
5	O&M information	
6	Validation	
7	Demonstrations	
8	Prelims/overheads	
9	Forming enclosure around works area	
10	Compliance with hai-scribe	
	Total	

APPENDICES

Appendix A – Positive Pressure Isolation Schematic

Double click to launch application

70520(57)01-HK_A2.
pdf

Appendix B – HAI-SCRIBE

Appendix c – ‘As built’ ventilation ductwork layout drawing number ME-ZC-02-PL-524-508

5th May 2016

Dear Teresa,

Congratulations on your new role as Infection Control Lead. We look forward to working with you in this capacity.

As you know in May last year we moved from our purpose built ID unit on the GGH site to QEUH ward 5c. This has come with significant benefits to our patients, not least access to state of the art intensive care as well as proximity to other specialties. We were reassured that we would have access to at least two “negative pressure rooms” before we moved over. However this did not materialise and there have been some significant issues in relation to Infection Control. Safety for staff and patients has been highlighted by our recent experiences with Ebola infection. We have grave concerns that the new building is not a fit or safe environment to manage dangerous pathogens. We seek reassurances that, as lead, you are able to resolve some of the concerns below as a matter of urgency. We would like to see an urgent review of the facilities in place to manage such infections within GG&C, considering facilities available in adjacent health boards as part of that review. This would allow any interim solutions to the current problem to be considered.

Our major concern is the absence of airborne infection isolation rooms for managing dangerous pathogens, currently MERS-CoV being of highest concern. We are looking after potential patients in the positive pressure ventilated lobby rooms in HDU but we have questions about their suitability. There have been ongoing discussions about the basic engineering and lack of alarm systems. This pathogen has a high mortality rate (>36%) and clearly puts healthcare workers and other patients at risk if not managed appropriately. Nosocomial transmission is well described. We seek reassurance that the current environment meets national standards and ideally would like an independent review of these rooms.

Recently updated NICE guidelines have highlighted the issues of managing open TB in the new QEUH and possibly across the healthboard area. We previously took patients requiring inpatient care from other board areas to our negative pressure rooms, including from GRI, VIG, RAH and Inverclyde. We also often have very immunosuppressed patients on our ward, particularly HIV. We are now trying to manage PTB patients in the HDU rooms as well to avoid cross infection of TB to our other patients. The NICE guidelines highlight immunosuppression including specifically biologic agents as of particular risk in addition to HIV. Many inpatients throughout other specialties are on such agents, so are also at risk. We are not clear if the HDU rooms have enough air exchanges to keep staff safe and we do have MDR-TB presenting commonly which is of particular concern. Again we need a board wide strategy to manage in-patients with respiratory tuberculosis in terms of where they are cared for.

We are working in collaboration, on an updated SOP for VHF which I think is reasonably far forward.

We look forward to a good working relationship that leads to high quality clinical care for our patients with infection but also protects other patients and staff from such infections, particularly highly dangerous pathogens such as MERS CoV.

Kind regards,

Erica Peters David Bell Beth White Alisdair MacConnachie

Tom Evans Ray Fox Andrew Seaton John Yates Emma Thomson

ID Physicians GG&C

FW: Sealing of Suites within Childrens Hospital Ward 2A

Inkster Teresa (NHS GREATER GLASGOW & CLYDE - SGA20)

Wed 09/09/2015 16:17

To:brian.jones@[redacted] Cruickshank Anne (NHS GREATER GLASGOW & CLYDE - SGA20) <Anne.Cruickshank@g[redacted]

Importance: High

Sensitivity Confidential

Dear both ,

I was asked by Craig yesterday to cover him on Friday - I was not told of any issues . I have just received the email thread below in relation to childrens BMT . I am particularly concerned about the phrase ;
'By this Friday at the latest I am looking for infection control to feed into the process where three way Director approval will be reached that rooms 18 and 19 are passed for transplanting.'

Once again I am being asked to make a major decision about patient safety with no handover and no involvement in the background to all of this .

I am not prepared to make this decision

Can you please advise me how to respond

Kind Regards
Teresa

Dr Teresa Inkster
Consultant Microbiologist and Infection Control Doctor
Dept of Microbiology
Queen Elizabeth University Hospital
Glasgow
Direct dial : [redacted]

From: McNamee, Sandra [Sandra.McNamee[redacted]
Sent: 09 September 2015 16:05
To: Redfern James (NHS GREATER GLASGOW & CLYDE - SGA20)
Cc: pamela.joannidis[redacted] Williams Craig (NHS GREATER GLASGOW & CLYDE - SGA20); Inkster Teresa (NHS GREATER GLASGOW & CLYDE - SGA20); alison.balfou[redacted]
Subject: FW: Sealing of Suites within Childrens Hospital Ward 2A

Hi Jamie
I am acting up for Tom so could you cc me into any correspondence regarding this issue.

In response to your e mail:

- My understanding is that the ICDs who will give advice after reviewing the results of this weeks testing will be Dr. Alison Balfour (Thursday) or Dr T Inkster (Friday). We will let you know when these are available.
- Craig will be back on Monday and can advise on the testing of the other rooms due to be sealed next week.
- Pamela is meeting with Billy tomorrow to progress the issues regarding the cleaning of the unit.

Thanks
Sandra

Sandra McNamee
Associate Nurse Director
Infection Prevention & Control
[redacted]
A49618520

[redacted]

From: Hamilton, Pauline
Sent: 09 September 2015 15:41
To: McNamee, Sandra
Subject: FW: Sealing of Suites within Childrens Hospital Ward 2A

fyi

From: Redfern, Jamie
Sent: 09 September 2015 15:08
To: Joannidis, Pamela
Cc: Williams, Craig
Subject: FW: Sealing of Suites within Childrens Hospital Ward 2A

Hi Pamela

In Craig's absence will you and colleagues in infection control / microbiology be following up on actions set for him following Monday's meeting?
That is
- update on the pending microbiology test results in rooms 18 / 19 ward 2a rhc hopefully received today and fully reported by Friday?
- completion on test results of 2 additional rooms in ward 2a rhc which will be fully sealed next week 1 on the Wednesday and 1 on the Friday by Brookfield.
By this Friday at the latest I am looking for infection control to feed into the process where three way Director approval will be reached that rooms 18 and 19 are passed for transplanting.
We aim to start transplant of a patient next Monday so this timeline is absolutely key. If concerns around it I need to be made aware immediately.
Our aim as quick as possible is then to have the 2 further rooms fully sealed and passed by Brookfield/ estates and subsequently infection control to same standard of rooms 18 / 19.
This will require you guys as noted abobe to be able to do the necessary microbiology tests the minute sealing and permeability is finished on these two additional rooms. Again if this causes any concerns can you let me know.

Jamie

From: Redfern, Jamie
Sent: 09 September 2015 14:46
To: Armstrong, Jennifer; Archibald, Grant; Williams, Craig; Loudon, David
Subject: FW: Sealing of Suites within Childrens Hospital Ward 2A

Dear all

See attached email below which confirms that by next Friday I would hope all things being equal we move from 2 to 4 rooms in ward 2a fully sealed and with passed permeability testing completed. Prof Gibson is aware of this plan as is SCN for the ward.
I will keep you updated on progress of this and also liaise direct with microbiology around additional testing they will be looking to do on the newly sealed rooms. As also noted at end of next week we will then agree a timetable to have the 4 remaining rooms (out of the 8) in ward 2a sealed and tested.
The proposal to do additional estates work on say 2 of the 8 rooms (meet the LEeds spec) will require further discussion which estates colleagues agreed to take up direct with Gillon in the first instance.

Jamie

From: Redfern, Jamie
Sent: 09 September 2015 14:38
To: Hunter, William
Cc: 'Gillon Armstrong'; Dawes, Heather
Subject: RE: Sealing of Suites within Childrens Hospital Ward 2A
A49618520

Hi Billy

I did a walk round each ward area TODAY in RHC where sealing / permeability testing in cubicles remains outstanding.
Gillon has now met the senior charge nurse for each area and agreed a provisional plan for the majority of these rooms.
He seemed very happy with the progress we have made.
Included in this is a draft plan next week to seal and test two further rooms in ward 2a.
This would be 1 room Tuesday / Wednesday and the 2nd room Thursday Friday.
So by close of play next Friday we would aim to have 4 rooms sealed and tested in this ward as per agreement at Monday's meeting.
For the two additional rooms would then look for microbiology to do their additional testing.
At the end of next week we will review progress in 2a and look to agree a plan with Gillon to do the 4 remaining rooms in 2a and what remains outstanding across rest of hospital which should in effect be 2 rooms in critical care.
Hopefully this makes sense. Gillon is going to provide a spreadsheet which highlights this in a more structured fashion.
Cheers

Jamie

From: Hunter, William
Sent: 08 September 2015 09:19
To: Redfern, Jamie
Cc: 'Gillon Armstrong'
Subject: Sealing of Suites within Childrens Hospital Ward 2A

Jamie,

I have spoken to Gillon Armstrong this morning in connection with above and he is keen to complete the job of sealing all suites within ward 2A, to reflect the level of air permeability within which has been achieved within the two BMT suites.

Gillon, on behalf of Brookfield, requires access to these rooms and I had suggested that you may be best placed to arrange this. I also understand that you guys are scheduled to meet tomorrow therefore it would be helpful if access arrangements could be agreed which would then go some way to support our risk migration strategy as described last night by the Medical Director.

Can you please drop me an email to confirm that above request is ok.

Regards
Billy

William Hunter \ General Manager \ South & Clyde Sector Facilities Directorate \ NHS Greater Glasgow & Clyde \ New Laboratory Medicine & FM Building, Southern General Hospital \ Tel: [redacted]) \ Fax: [redacted] \ email: william.hunter[redacted]

****
NHSGG&C Disclaimer
The information contained within this e-mail and in any attachment is confidential and may be privileged. If you are not the intended recipient, please destroy this message, delete any copies held on your systems and notify the sender immediately; you should not retain, copy or use this e-mail for any purpose, nor disclose all or any part of its content to any other person.
All messages passing through this gateway are checked for viruses, but we strongly recommend that you check for viruses using your own virus scanner as NHS Greater Glasgow & Clyde will not take responsibility for any damage caused as a result of virus infection.
****

RE: Sealing of Suites within Children's Hospital Ward 2A

McNamee, Sandra <Sandra.McNamee[redacted]

Fri 11/09/2015 09:43

To Inkster Teresa (NHS GREATER GLASGOW & CLYDE - SGA20) <teresa.inkste[redacted]

Teresa - I have some additional information could you call me urgently.
kind regards
Sandra

Sandra McNamee
Associate Nurse Director
Infection Prevention & Control
[redacted]

From: Inkster Teresa (NHS GREATER GLASGOW & CLYDE - SGA20) [mailto:teresa.inkste[redacted]
Sent: 10 September 2015 15:43
To: McNamee, Sandra
Cc: Joannidis, Pamela; Balfour, Alison; Jones, Brian
Subject: RE: Sealing of Suites within Childrens Hospital Ward 2A
Importance: High

Dear Sandra ,

I have not been involved in any discussions or attended any meetings regarding childrens BMT and I have not received a handover. This is a complex issue and, ideally, any decision should be made in conjunction with estates colleagues, Prof Williams (ICD for RHC) and Dr John Hood (local ventilation expert who has been closely involved).

Pamela, Alison and myself met today and reviewed the particle counts from Friday 4th September and these are still elevated in rooms 18 and 19 . Pamela has reviewed the unit today and has expressed concerns re practice and procedures. Pamela has also noted outside construction work in close vicinity to the unit.

Whilst particle counts are only one parameter , they would indicate that further investigations are necessary to ensure safety for patients. It would be helpful to have sight of the following ;

1) Validation reports including leak test results
2) Minutes from relevant previous meetings
3) The most recent report and recommendations from Dr Hood

In light of the information currently available to us , Alison, Pamela and I feel that we must err on the side of caution and cannot recommend that the unit is safe for transplant procedures.

Kind Regards
Teresa

Dr Teresa Inkster
Consultant Microbiologist and Infection Control Doctor
Dept of Microbiology
Queen Elizabeth University Hospital
Glasgow
[redacted]

From: McNamee, Sandra [Sandra.McNamee[redacted]
Sent: 09 September 2015 16:05
To: Redfern James (NHS GREATER GLASGOW & CLYDE - SGA20)
Cc: pamela.Joannidis@g[redacted]Williams Craig (NHS GREATER GLASGOW & CLYDE - SGA20); Inkster Teresa (NHS GREATER GLASGOW & CLYDE - SGA20); alison.balfou[redacted]
Subject: FW: Sealing of Suites within Childrens Hospital Ward 2A

Hi Jamie
I am acting up for Tom so could you cc me into any correspondence regarding this issue.

In response to your e mail:

- My understanding is that the ICDs who will give advice after reviewing the results of this weeks testing will be Dr. Alison Balfour (Thursday) or Dr T Inkster (Friday). We will let you know when these are available.
- Craig will be back on Monday and can advise on the testing of the other rooms due to be sealed next week.
- Pamela is meeting with Billy tomorrow to progress the issues regarding the cleaning of the unit.

Thanks
Sandra

Sandra McNamee
Associate Nurse Director

Infection Prevention & Control
[redacted]

From: Hamilton, Pauline
Sent: 09 September 2015 15:41
To: McNamee, Sandra
Subject: FW: Sealing of Suites within Childrens Hospital Ward 2A

fyi

From: Redfern, Jamie
Sent: 09 September 2015 15:08
To: Joannidis, Pamela
Cc: Williams, Craig
Subject: FW: Sealing of Suites within Childrens Hospital Ward 2A

Hi Pamela

In Craig's absence will you and colleagues in infection control / microbiology be following up on actions set for him following Monday's meeting?
That is
- update on the pending microbiology test results in rooms 18 / 19 ward 2a rhc hopefully received today and fully reported by Friday?
- completion on test results of 2 additional rooms in ward 2a rhc which will be fully sealed next week 1 on the Wednesday and 1 on the Friday by Brookfield.
By this Friday at the latest I am looking for infection control to feed into the process where three way Director approval will be reached that rooms 18 and 19 are passed for transplanting.
We aim to start transplant of a patient next Monday so this timeline is absolutely key. If concerns around it I need to be made aware immediately.
Our aim as quick as possible is then to have the 2 further rooms fully sealed and passed by Brookfield/ estates and subsequently infection control to same standard of rooms 18 / 19.
This will require you guys as noted abobe to be able to do the necessary microbiology tests the minute sealing and permeability is finished on these two additional rooms. Again if this causes any concerns can you let me know.

Jamie

From: Redfern, Jamie
Sent: 09 September 2015 14:46
To: Armstrong, Jennifer; Archibald, Grant; Williams, Craig; Loudon, David
Subject: FW: Sealing of Suites within Childrens Hospital Ward 2A

Dear all

See attached email below which confirms that by next Friday I would hope all things being equal we move from 2 to 4 rooms in ward 2a fully sealed and with passed permeability testing completed. Prof Gibson is aware of this plan as is SCN for the ward.
I will keep you updated on progress of this and also liaise direct with microbiology around additional testing they will be looking to do on the newly sealed rooms. As also noted at end of next week we will then agree a timetable to have the 4 remaining rooms (out of the 8) in ward 2a sealed and tested.
The proposal to do additional estates work on say 2 of the 8 rooms (meet the LEeds spec) will require further discussion which estates colleagues agreed to take up direct with Gillon in the first instance.

Jamie

From: Redfern, Jamie
Sent: 09 September 2015 14:38
To: Hunter, William
Cc: 'Gillon Armstrong'; Dawes, Heather
Subject: RE: Sealing of Suites within Childrens Hospital Ward 2A

Hi Billy

I did a walk round each ward area TODAY in RHC where sealing / permeability testing in cubicles remains outstanding.
Gillon has now met the senior charge nurse for each area and agreed a provisional plan for the majority of these rooms.
He seemed very happy with the progress we have made.
Included in this is a draft plan next week to seal and test two further rooms in ward 2a.
This would be 1 room Tuesday / Wednesday and the 2nd room Thursday Friday.
So by close of play next Friday we would aim to have 4 rooms sealed and tested in this ward as per agreement at Monday's meeting.
For the two additional rooms would then look for microbiology to do their additional testing.
At the end of next week we will review progress in 2a and look to agree a plan with Gillon to do the 4 remaining rooms in 2a and what remains outstanding across rest of hospital which should in effect be 2 rooms in critical care.
Hopefully this makes sense. Gillon is going to provide a spreadsheet which highlights this in a more structured fashion.
Cheers

Jamie

From: Hunter, William
Sent: 08 September 2015 09:19
To: Redfern, Jamie
Cc: 'Gillon Armstrong'
Subject: Sealing of Suites within Childrens Hospital Ward 2A

Jamie,

I have spoken to Gillon Armstrong this morning in connection with above and he is keen to complete the job of sealing all suites within ward 2A, to reflect the level of air permeability within which has been achieved within the two BMT suites.

Gillon, on behalf of Brookfield, requires access to these rooms and I had suggested that you may be best placed to arrange this. I also understand that you guys are scheduled to meet tomorrow therefore it would be helpful if access arrangements could be agreed which would then go some way to support our risk migration strategy as described last night by the Medical Director.

Can you please drop me an email to confirm that above request is ok.

Regards
Billy

William Hunter \ General Manager \ South & Clyde Sector Facilities Directorate \ NHS Greater Glasgow & Clyde \ New Laboratory Medicine & FM Building, Southern General Hospital \ Tel: [redacted]

****
NHSGG&C Disclaimer
The information contained within this e-mail and in any attachment is confidential and may be privileged. If you are not the intended recipient, please destroy this message, delete any copies held on your systems and notify the sender immediately; you should not retain, copy or use this e-mail for any purpose, nor disclose all or any part of its content to any other person.
All messages passing through this gateway are checked for viruses, but we strongly recommend that you check for viruses using your own virus scanner as NHS Greater Glasgow & Clyde will not take responsibility for any damage caused as a result of virus infection.
****

****

This message may contain confidential information. If you are not the intended recipient please inform the sender that you have received the message in error before deleting it.
Please do not disclose, copy or distribute information in this e-mail or take any action in reliance on its contents: to do so is strictly prohibited and may be unlawful.

Thank you for your co-operation.

NHSmail is the secure email and directory service available for all NHS staff in England and Scotland

Dear All

I Can now confirm the above meeting for **today at 12 Noon** in Jamie's Office, Ground Floor, Royal Hospital for Children, Govan Road, Glasgow.

Jamie's office is located off the main entrance. Passed Radio lollipop on the right hand said. Left at the patient information office and Jamie's office is second last door on the right.

Thank you.

Jacquie Bruce
PA to Kevin Hill, Director, Women & Children's Directorate and
Jamie Redfern, General Manager, Hospital Paediatrics & Neonatology
Zone 2, Area 2, Office Block
SGUH
Govan Road, Glasgow, G51 4TF
Tel: [redacted]
Email: Jacquie.Bruce[redacted]

PS. I've signed up to improving our email culture

From: Redfern, Jamie
Sent: 11 September 2015 08:40
To: McNamee, Sandra; Bruce, Jacquie
Cc: Hunter, William; Bruce, Jacquie
Subject: Bmt

Hi Sandra
I spoke to Grant earlier today.
He is not available just now
Can we meet urgently today with the microbiologist who was working on this yesterday with Billy Hunter to discuss bmt. We may have to meet Grant later. My secretary will try to coordinate.
In meantime I will also try to get a hold of Brenda Gibson.
Your help with this much appreciated.
Cheers
Jamie

Jacquie
Asap for today as early as possible can you liaise with Sandra and Billy to get us in my office to discuss. Sandra can link you to microbiologist. Check too if Alan is about. If not we need to go without him and I'll brief him later.
Cheers
Jamie

Sent from my Samsung device

****
NHSGG&C Disclaimer

The information contained within this e-mail and in any attachment is confidential and may be privileged. If you are not the intended recipient, please destroy this message, delete any copies held on your systems and notify the sender immediately; you should not retain, copy or use this e-mail for any purpose, nor disclose all or any part of its content to any other person.

Re: BMT service at Royal Hospital for Children

Mathers, Alan <Alan.Mathers[redacted]

Fri 11/09/2015 16:32

To: Inkster Teresa (NHS GREATER GLASGOW & CLYDE - SGA20) <teresa.inkste[redacted]; Williams Craig (NHS GREATER GLASGOW & CLYDE - SGA20) <Craig.Williams[redacted]

Cc: Gibson, Brenda <Brenda.Gibson[redacted]k>; Redfern James (NHS GREATER GLASGOW & CLYDE - SGA20) <Jamie.Redfern[redacted]; brian.jones[redacted] <brian.jones[redacted] Mcnamee Sandra (NHS GREATER GLASGOW & CLYDE - SGA20) <Sandra.McNamee[redacted]

Thanks : very helpful

Sent from my BlackBerry 10 smartphone on the EE network.

From: Inkster Teresa (NHS GREATER GLASGOW & CLYDE - SGA20)
Sent: Friday, 11 September 2015 15:58
To: Mathers, Alan; Williams, Craig
Cc: Gibson, Brenda; Redfern, Jamie; Jones, Brian; McNamee, Sandra
Subject: RE: BMT service at Royal Hospital for Children

Dear Alan,

Thanks for your email . I appreciate that this is a difficult risk assessment. Whilst I cannot comment on the haematological risk, from my perspective, based on available evidence as discussed this morning, I am unable to state that the rooms are microbiologically safe.

Antifungal prophylaxis is not 100% effective. Furthermore the efficacy of prophylaxis would be reduced in an environment with an increased fungal burden . The prevention of invasive fungal disease in SCT patients is achieved through a combination of both antifungal chemoprophylaxis and the provision of a clean air environment.

I hope this advice is useful and I would be happy to discuss further.

Please find attached a spreadsheet and lab reports of fungi grown from June onwards. We are awaiting mycology reports from fungi grown in August/September .

Kind Regards
Teresa

Dr Teresa Inkster
Consultant Microbiologist and Infection Control Doctor

Dept of Microbiology
Queen Elizabeth University Hospital
Glasgow
[redacted]

From: Mathers, Alan [Alan.Mather[redacted]
Sent: 11 September 2015 14:53
To: Williams Craig (NHS GREATER GLASGOW & CLYDE - SGA20); Inkster Teresa (NHS GREATER GLASGOW & CLYDE - SGA20)
Cc: Gibson, Brenda; Redfern James (NHS GREATER GLASGOW & CLYDE - SGA20)
Subject: BMT service at Royal Hospital for Children

Dear Teresa,

Thanks for input today.
Appreciate that you were catapulted into a difficult situation.

"We" (ie local team) have to weigh up a whole range of risks as you appreciate from, in particular the acute patient situation. There is inherent mortality risk and this escalates with time passing and in addition the donor is being worked up and there is a risk that we lose them. So: risk assessment continues to evolve.

Would you be able to send a list of the fungi grown and the site and provide a view as to how effective anti-fungal prophylaxis would be (there is a Double prophylaxis option too)?

The use of another place in Glasgow (such as Beatson) is considered untenable for the patient foremost in our thoughts due to lack of Paediatric Intensive care.

A meeting on Monday will be convened and so info for then would be very helpful.

Appreciate if you can reply to all.

Kind regards

Alan

Dr Alan M Mathers
Chief of Medicine Women and Children
Consultant Obstetrician and Gynaecologist
Greater Glasgow and Clyde Health Board
[redacted]
alternative: email alan.mather[redacted]

Re: BMT RHC

McNamee, Sandra <Sandra.McNamee[redacted]

Mon 14/09/2015 08:25

To:alan.mather[redacted]; Archibald Grant (NHS GREATER GLASGOW & CLYDE) <Grant.Archibald[redacted]; Armstrong Jennifer (NHS GREATER GLASGOW & CLYDE) <Jennifer.Armstrong[redacted]

Cc:Redfern James (NHS GREATER GLASGOW & CLYDE) <Jamie.Redfern[redacted]; Archibald Grant (NHS GREATER GLASGOW & CLYDE) <Grant.Archibald[redacted]; Williams Craig (NHS GREATER GLASGOW & CLYDE) <Craig.Williams@[redacted]; Inkster Teresa (NHS GREATER GLASGOW & CLYDE) <teresa.inkster[redacted]

Hi to be fair, additional information regarding the type of fungal spores became available between these conversations. Sandra
Sent from my BlackBerry 10 smartphone on the EE network.

From: Mathers, Alan
Sent: Monday, 14 September 2015 08:17
To: Archibald, Grant; Armstrong, Jennifer
Cc: Redfern, Jamie; McNamee, Sandra; Archibald, Grant
Subject: Re: BMT RHC

Dear All
I am doing a theatre list this morning at GRI and will be over for an already packed afternoon at RCH around 2pm providing theatre goes to plan.
I sense that none of the local measures that could be / are being put in place will militate against the risk that the majority bacteriological advice is providing and there is a matter of determining whose opinion trumps others: every time the advisory circle increases and different people are round the table there is more heat than light.

I was quoted very different risks from bacteriological about some of the organisms last Friday and obviously the context of how they might reach the patient is critical.
Kind regards

Alan

Sent from my BlackBerry 10 smartphone on the EE network.

From: Archibald, Grant
Sent: Monday, 14 September 2015 07:57
To: Armstrong, Jennifer

Cc: Mathers, Alan; Redfern, Jamie; McNamee, Sandra; Archibald, Grant
Subject: Re: BMT RHC

In on site now and this an if discussions are required

Grant Archibald
Chief Officer

On 14 Sep 2015, at 6:58 am, Armstrong, Jennifer <Jennifer.Armstrong[redacted]> wrote:

> Just for clarity, what I asked for is that the estates team and the infection control team work together over the weekend to urgently address the issues identified in the unit. They would then put in place any additional measures to mitigate the risks. I was keen that we engender a sense of urgency to address the problem. However I note further meeting today so hopefully there may be some progress and review of all the data with a risk assessment of different courses of action.
> J
>
> Sent from my BlackBerry 10 smartphone on the EE network.
>
> **From:** Mathers, Alan
> **Sent:** Friday, 11 September 2015 17:52
> **To:** Redfern, Jamie; McNamee, Sandra
> **Cc:** Armstrong, Jennifer; Archibald, Grant
> **Subject:** RE: BMT RHC
>
> Dear Jamie,
>
> Just spoke with Brian Jones, listened and have advised him to organise further testing over weekend irrespective of any pre-conceived perceived doubts about value.
> He quoted different lethality of some of the Fungi described earlier in day but isn't hopeful for a bacteriology clean bill of health (no pun at all intended).
>
> Interim results from plates placed on Saturday would be available Wednesday / Thursday.
>
> Kind regards
>
> Alan
>
> **From:** Redfern, Jamie
> **Sent:** 11 September 2015 16:30
> **To:** McNamee, Sandra

Cc: Armstrong, Jennifer; Mathers, Alan; Archibald, Grant
Subject: BMT RHC

Hi Sandra

I have just spoken to Jennifer A and she has asked that infection control be instructed to carry out further [redacted] over the weekend. She is also keen that we get the reported results on these tests as quickly as possible into next weekend preferably ahead of when the [redacted] arrives on Thursday night to hospital for treatment beginning on the Monday 21st. Can you please put the processes in place to make this happen and confirm to all ccd into this email when actioned. Thanks

Jamie

PS: I will try to follow this email up by phone call to you

NHSGG&C Disclaimer

The information contained within this e-mail and in any attachment is confidential and may be privileged. If you are not the intended recipient, please destroy this message, delete any copies held on your systems and notify the sender immediately; you should not retain, copy or use this e-mail for any purpose, nor disclose all or any part of its content to any other person.

All messages passing through this gateway are checked for viruses, but we strongly recommend that you check for viruses using your own virus scanner as NHS Greater Glasgow & Clyde will not take responsibility for any damage caused as a result of virus infection.

FYI

Dr Teresa Inkster
Consultant Microbiologist and Infection Control Doctor
Dept of Microbiology
Queen Elizabeth University Hospital
Glasgow
Direct dial : [redacted]

Mark as unread

Redfern, Jamie <Jamie.Redfern[redacted]
Sat 24/10/2015 14:47

Brenda
I will arrange a meeting on Monday with you, Ian Powrie, jean, heather and Craig. Anyone who thinks they also need to be involved let me know.
Jamie

Sent from my Samsung device

-------- Original message --------
From: "Gibson, Brenda" <[redacted]
Date: 24/10/2015 12:56 PM (GMT+00:00)
To: "Kirkwood, Jean" [redacted], "Powrie, Ian" [redacted] "Redfern, Jamie" [redacted], "Dawes, Heather" [redacted], "Williams, Craig" [redacted], "Inkster, Teresa (NHSmail)" [redacted] "Loudon, David" [redacted] "Kane, Mary Anne" [redacted] "Hunter, William" [redacted] "Ewins, Anna-Maria" [redacted] "Hutton, Melanie" [redacted]
Cc: "MacKinnon, Yvonne" <[redacted]
Subject: RE: Critical care rooms

Sorry , I have just returned from Toronto but had heard about this problem before reading this e-mail. I have to join Jean Kirkwood in asking whether these rooms are fit for purpose. I have also been told that the negative pressure was first noted by a parent , which if true is unacceptable. I am aware that there has been a meeting about this issue , but would like another to understand the extent of the problem and the long term consequences.

B.W.

Brenda

Prof Brenda Gibson
Consultant Haematologist
Schiehallion Ward (Ward 2A)
Royal Hospital for Sick Children
1345 Govan Road
GLASGOW G51 4TF

[redacted]

From: Kirkwood, Jean
Sent: 23 October 2015 09:24
To: Powrie, Ian; Redfern, Jamie; Dawes, Heather; Williams, Craig; Inkster, Teresa (NHSmail);Loudon, David; Kane, Mary Anne; Hunter, William; Ewins, Anna-Maria; Hutton, Melanie
Cc: MacKinnon, Yvonne; Gibson, Brenda
Subject: RE: Critical care rooms

Sorry, are these rooms fit for transplant patients to be in?

Many thanks
Jean

From: Powrie, Ian
Sent: 23 October 2015 08:08
To: Redfern, Jamie; Dawes, Heather; Kirkwood, Jean; Williams, Craig; Inkster, Teresa (NHSmail); Loudon, David; Kane, Mary Anne; Hunter, William
Subject: FW: Critical care rooms

Jamie,

Further to our discussion last night regarding ward 2a isolation bed room 18, which had lost its lobby positive pressure, as indicated the ventilation plant was reset and restored at approximately 18:00hrs.
However following this the ventilation plant for isolation bed room 19 failed, which I believe you are moving a transplant patient into this morning?
Unfortunately my team nor I could return this plant to service as the controls where holding it off line, I implemented our emergency call out procedure for Schneider control s support provider who returned to site by 21:00 hours, the during their investigations a further 4 ventilation supplying war 2A also failed in the manner, this is believed to be a network problem but could not be confirmed with the resources available last night. The 5 affected units where place in manual and the pressures set by hand for each isolation suite(at between 10 – 15pa) in order to maintain an isolation capability in these suites.

The isolation suites affected by this common fault are:

Isolation Bed No 10.
Isolation Bed No 11.
Isolation Bed No 20.
Isolation Bed No 19.
Isolation Bed No 18.

The engineer completed these works at 03:30 this morning, the Controls network engineer will investigate further this morning.
I will keep you up to date on progress made.

Regards

ian

I. Powrie
Sector Estates Manager (South & Clyde)
Queen Elizabeth University Hospital Campus,
1345 Govan Rd,
Glasgow,
G51 4TF,
[redacted]

From: Guthrie, James
Sent: 23 October 2015 05:33
To: Powrie, Ian
Subject: Critical care rooms

HI IAN,

Here is the list of the 36 isolation room figures. Most of the pressures look ok even though the guys say the filters are dirty but everybody interprets that differently.
The room pressures are still being taken daily in the critical care wards but 4 times a day in schiehallion and have been for a while.

The Schneider tech jim came out and also Paul the manager to help. They were here until 3.30 AM but had a lot of issues. While working on 41AHU 31 the lads were inspecting the system and found 2 more units beside this one to be off. Paul checked this and then a fourth and fifth went offline. They worked on it but it has baffled them. They believe but are not sure, there could be a network problem that has stopped the signal getting to the inverters to command them to start but still unsure. Subsequently we had to put the five AHUs on hand and have balanced the speed to get a good pressure. We are monitoring the pressures constantly and the guys are adjusting the frequency to do this. If we did not we would have had 5 rooms down. Paul is briefing Kenny when he comes in.The AHU`s that have been put on hand are:

41A AHU 19

41A AHU 23

41A AHU 26

41A AHU 29

41A AHU 31

I will email David a list of Filters required that are starting to run low.

Regards jim

****
NHSGG&C Disclaimer
The information contained within this e-mail and in any attachment is confidential and may be privileged. If you are not the intended recipient, please destroy this message, delete any copies held on your systems and notify the sender immediately; you should not retain, copy or use this e-mail for any purpose, nor disclose all or any part of its content to any other person.
All messages passing through this gateway are checked for viruses, but we strongly recommend that you check for viruses using your own virus scanner as NHS Greater Glasgow & Clyde will not take responsibility for any damage caused as a result of virus infection.
****

Lang, Ann

From: McNamee, Sandra
Sent: 07 September 2015 15:15
To: Lang, Ann
Subject: FW: Isolation rooms
Attachments: DH Isolation rooms 10-12.pdf; HBN 4 Supp 1 Isolation facilities.pdf; HBN 4 Suppl 1 NOTE ON WITHDRAWA L 18-5-10.docx

Sandra McNamee
Associate Nurse Director
Infection Prevention & Control
[redacted]

om: Stewart, Jackie
ent: 14 November 2012 14:46
To: McNamee, Sandra
Subject: FW: Isolation rooms

Hi Sandra,

This is the email I alluded to yesterday. I have to admit that I'm a bit confused as this design was accepted before I joined the team and that Craig has been asked on numerous occasions to check issues that crop up. Craig and Teresa spent a lot of time with the tech guys and I specifically asked Craig what he wanted to go into in detail, as well as the overall approach to ventialtion and water supply. Brookfield have worked to the guidance.
I will however diplomatically double check the ventilation supply for these rooms with lobbies. My understanding is that they are negative pressure.
I'll get back to you asap.

Thanks,

Jackie.

---

om: Inkster Teresa (NHS Greater Glasgow & Clyde) [mailto:teresa.inkster[redacted]
Sent: 09 November 2012 15:45
To: Williams, Craig
Cc: Stewart, Jackie
Subject: FW: Isolation rooms

Thoughts from Peter Hoffman below regarding the isolation rooms.
BW
Teresa

Dr Teresa Inkster
Consultant Microbiologist and Infection Control Doctor
Dept of Microbiology
Lister Building
Glasgow Royal Infirmary
[redacted]

From: Peter Hoffman [peter.hoffman[redacted]
Sent: 09 November 2012 15:35

Asset Code / Exist Code	Room Number	Room Name	DL Room Area	DL Room Height	Design Criteria - Min Lux Required	Design Criteria - Max Glare Index Designed	Design Criteria - Room Perimeter	Design Criteria - Lighting Method	Design Criteria - Zone	Design Criteria - Production Group No.	Occupancy - Room in use	Occupancy - Occupancy Periods	Activities	Design Notes	Temperature - Winter degC	Temperature - Summer degC	Temperature Notes	Temperature - Relative Humidity%	Ventilation - Extract m3/hr	Ventilation - Supply m3/hr	Mechanical Ventilation Notes	Ventilation - Relative Pressure	Ventilation - Fresh Spot Efficiency	Ventilation - Air exchanges	Filtration Humidity Notes	Ventilation - General HVAC Notes	Lighting - Service Illumination Lux	Service Illumination Lux Notes	Lighting - Service Illumination Night Lux	Service Illumination Night Lux Notes	Lighting - Service Illumination Local Lux	Service Illumination Local Lux Notes	Lighting - Colour Rendering	Lighting - Colour Rendering Notes	Lighting - Standby Lighting Groups
02.02.01	02	Toilet/Shower/Staff Locker Room	121	2.70	150 Lux	19 Glare	44.00 m	01 Ceiling Mounted	01		24 Hours	1 Occupied whole time	1 Clinical assisted shower. 2 Clinical assisted toilet. 3 Clinical assisted shower. 4 Clinical assisted toilet.	Not relevant to this room	24	24		50									200 Lux							80		Not applicable to right lighting Second lighting
02.02.02	02	Toilet/Shower/Staff Locker Room	121	2.70	150 Lux	19 Glare	44.00 m	01 Ceiling Mounted	01		24 Hours	1 Occupied whole time	1 Clinical assisted shower. 2 Clinical assisted toilet. 3 Clinical assisted shower. 4 Clinical assisted toilet.	Not relevant to this room	24	24		50									200 Lux							80		Not applicable to right lighting Second lighting
		WARNING NOTICE: This room is based on a theoretical design model which has not been validated (see paragraph 1.8 of HBN 1 Supplement 1). Specialist advice should be sought on its design. The temp repeat cell from the bedroom is situated over the door outside the room.																																		
02.02.03	02	Toilet/Shower/Staff Locker Room	121	2.70	150 Lux	19 Glare	44.00 m	01 Ceiling Mounted	01		24 Hours	1 Occupied whole time	1 Clinical assisted shower. 2 Clinical assisted toilet. 3 Clinical assisted shower. 4 Clinical assisted toilet.	Not relevant to this room	24	24		50									200 Lux							80		Not applicable to right lighting Second lighting
02.02.04	02	Toilet/Shower/Staff Locker Room	121	2.70	150 Lux	19 Glare	44.00 m	01 Ceiling Mounted	01		24 Hours	1 Occupied whole time	1 Clinical assisted shower. 2 Clinical assisted toilet. 3 Clinical assisted shower. 4 Clinical assisted toilet.	Not relevant to this room	24	24		50									200 Lux							80		Not applicable to right lighting Second lighting
02.02.05	02	Toilet/Shower/Staff Locker Room	121	2.70	150 Lux	19 Glare	44.00 m	01 Ceiling Mounted	01		24 Hours	1 Occupied whole time	1 Clinical assisted shower. 2 Clinical assisted toilet. 3 Clinical assisted shower. 4 Clinical assisted toilet.	Not relevant to this room	24	24		50									200 Lux							80		Not applicable to right lighting Second lighting
		WARNING NOTICE: This room is based on a theoretical design model which has not been validated (see paragraph 1.8 of HBN 1 Supplement 1). Specialist advice should be sought on its design. The temp repeat cell from the bedroom is situated over the door outside the room.																																		
02.02.06	02	Toilet/Shower/Staff Locker Room	121	2.70	150 Lux	19 Glare	44.00 m	01 Ceiling Mounted	01		24 Hours	1 Occupied whole time	1 Clinical assisted shower. 2 Clinical assisted toilet. 3 Clinical assisted shower. 4 Clinical assisted toilet.	Not relevant to this room	24	24		50									200 Lux							80		Not applicable to right lighting Second lighting
		WARNING NOTICE: This room is based on a theoretical design model which has not been validated (see paragraph 1.8 of HBN 1 Supplement 1). Specialist advice should be sought on its design. The temp repeat cell from the bedroom is situated over the door outside the room.																																		
02.02.07	02	Toilet/Shower/Staff Locker Room	121	2.70	150 Lux	19 Glare	44.00 m	01 Ceiling Mounted	01		24 Hours	1 Occupied whole time	1 Clinical assisted shower. 2 Clinical assisted toilet. 3 Clinical assisted shower. 4 Clinical assisted toilet.	Not relevant to this room	24	24		50									200 Lux							80		Not applicable to right lighting Second lighting
02.02.08	02	Toilet/Shower/Staff Locker Room	121	2.70	150 Lux	19 Glare	44.00 m	01 Ceiling Mounted	01		24 Hours	1 Occupied whole time	1 Clinical assisted shower. 2 Clinical assisted toilet. 3 Clinical assisted shower. 4 Clinical assisted toilet.	Not relevant to this room	24	24		50									200 Lux							80		Not applicable to right lighting Second lighting
		WARNING NOTICE: This room is based on a theoretical design model which has not been validated (see paragraph 1.8 of HBN 1 Supplement 1). Specialist advice should be sought on its design. The temp repeat cell from the bedroom is situated over the door outside the room.																																		
02.02.09	02	Toilet/Shower/Staff Locker Room	121	2.70	150 Lux	19 Glare	44.00 m	01 Ceiling Mounted	01		24 Hours	1 Occupied whole time	1 Clinical assisted shower. 2 Clinical assisted toilet. 3 Clinical assisted shower. 4 Clinical assisted toilet.	Not relevant to this room	24	24		50									200 Lux							80		Not applicable to right lighting Second lighting
02.02.10	02	Toilet/Shower/Staff Locker Room	121	2.70	150 Lux	19 Glare	44.00 m	01 Ceiling Mounted	01		24 Hours	1 Occupied whole time	1 Clinical assisted shower. 2 Clinical assisted toilet. 3 Clinical assisted shower. 4 Clinical assisted toilet.	Not relevant to this room	24	24		50									200 Lux							80		Not applicable to right lighting Second lighting
02.02.11	02	Toilet/Shower/Staff Locker Room	121	2.70	150 Lux	19 Glare	44.00 m	01 Ceiling Mounted	01		24 Hours	1 Occupied whole time	1 Clinical assisted shower. 2 Clinical assisted toilet. 3 Clinical assisted shower. 4 Clinical assisted toilet.	Not relevant to this room	24	24		50									200 Lux							80		Not applicable to right lighting Second lighting
		WARNING NOTICE: This room is based on a theoretical design model which has not been validated (see paragraph 1.8 of HBN 1 Supplement 1). Specialist advice should be sought on its design. The temp repeat cell from the bedroom is situated over the door outside the room.																																		
02.02.12	02	Toilet/Shower/Staff Locker Room	121	2.70	150 Lux	19 Glare	44.00 m	01 Ceiling Mounted	01		24 Hours	1 Occupied whole time	1 Clinical assisted shower. 2 Clinical assisted toilet. 3 Clinical assisted shower. 4 Clinical assisted toilet.	Not relevant to this room	24	24		50									200 Lux							80		Not applicable to right lighting Second lighting
02.02.13	02	Toilet/Shower/Staff Locker Room	121	2.70	150 Lux	19 Glare	44.00 m	01 Ceiling Mounted	01		24 Hours	1 Occupied whole time	1 Clinical assisted shower. 2 Clinical assisted toilet. 3 Clinical assisted shower. 4 Clinical assisted toilet.	Not relevant to this room	24	24		50									200 Lux							80		Not applicable to right lighting Second lighting
02.02.14	02	Toilet/Shower/Staff Locker Room	121	2.70	150 Lux	19 Glare	44.00 m	01 Ceiling Mounted	01		24 Hours	1 Occupied whole time	1 Clinical assisted shower. 2 Clinical assisted toilet. 3 Clinical assisted shower. 4 Clinical assisted toilet.	Not relevant to this room	24	24		50									200 Lux							80		Not applicable to right lighting Second lighting
02.02.15	02	Toilet/Shower/Staff Locker Room	121	2.70	150 Lux	19 Glare	44.00 m	01 Ceiling Mounted	01		24 Hours	1 Occupied whole time	1 Clinical assisted shower. 2 Clinical assisted toilet. 3 Clinical assisted shower. 4 Clinical assisted toilet.	Not relevant to this room	24	24		50									200 Lux							80		Not applicable to right lighting Second lighting
		WARNING NOTICE: This room is based on a theoretical design model which has not been validated (see paragraph 1.8 of HBN 1 Supplement 1). Specialist advice should be sought on its design. The temp repeat cell from the bedroom is situated over the door outside the room.																																		
02.02.16	02	Toilet/Shower/Staff Locker Room	121	2.70	150 Lux	19 Glare	44.00 m	01 Ceiling Mounted	01		24 Hours	1 Occupied whole time	1 Clinical assisted shower. 2 Clinical assisted toilet. 3 Clinical assisted shower. 4 Clinical assisted toilet.	Not relevant to this room	24	24		50									200 Lux							80		Not applicable to right lighting Second lighting
02.02.17	02	Toilet/Shower/Staff Locker Room	121	2.70	150 Lux	19 Glare	44.00 m	01 Ceiling Mounted	01		24 Hours	1 Occupied whole time	1 Clinical assisted shower. 2 Clinical assisted toilet. 3 Clinical assisted shower. 4 Clinical assisted toilet.	Not relevant to this room	24	24		50									200 Lux							80		Not applicable to right lighting Second lighting
02.02.18	02	Toilet/Shower/Staff Locker Room	121	2.70	150 Lux	19 Glare	44.00 m	01 Ceiling Mounted	01		24 Hours	1 Occupied whole time	1 Clinical assisted shower. 2 Clinical assisted toilet. 3 Clinical assisted shower. 4 Clinical assisted toilet.	Not relevant to this room	24	24		50									200 Lux							80		Not applicable to right lighting Second lighting
02.02.19	02	Toilet/Shower/Staff Locker Room	121	2.70	150 Lux	19 Glare	44.00 m	01 Ceiling Mounted	01		24 Hours	1 Occupied whole time	1 Clinical assisted shower. 2 Clinical assisted toilet. 3 Clinical assisted shower. 4 Clinical assisted toilet.	Not relevant to this room	24	24		50									200 Lux							80		Not applicable to right lighting Second lighting
02.02.20	02	Toilet/Shower/Staff Locker Room	121	2.70	150 Lux	19 Glare	44.00 m	01 Ceiling Mounted	01		24 Hours	1 Occupied whole time	1 Clinical assisted shower. 2 Clinical assisted toilet. 3 Clinical assisted shower. 4 Clinical assisted toilet.	Not relevant to this room	24	24		50									200 Lux							80		Not applicable to right lighting Second lighting
02.02.21	02	Toilet/Shower/Staff Locker Room	121	2.70	150 Lux	19 Glare	44.00 m	01 Ceiling Mounted	01		24 Hours	1 Occupied whole time	1 Clinical assisted shower. 2 Clinical assisted toilet. 3 Clinical assisted shower. 4 Clinical assisted toilet.	Not relevant to this room	24	24		50									200 Lux							80		Not applicable to right lighting Second lighting
02.02.22	02	Toilet/Shower/Staff Locker Room	121	2.70	150 Lux	19 Glare	44.00 m	01 Ceiling Mounted	01		24 Hours	1 Occupied whole time	1 Clinical assisted shower. 2 Clinical assisted toilet. 3 Clinical assisted shower. 4 Clinical assisted toilet.	Not relevant to this room	24	24		50									200 Lux							80		Not applicable to right lighting Second lighting
02.02.23	02	Toilet/Shower/Staff Locker Room	121	2.70	150 Lux	19 Glare	44.00 m	01 Ceiling Mounted	01		24 Hours	1 Occupied whole time	1 Clinical assisted shower. 2 Clinical assisted toilet. 3 Clinical assisted shower. 4 Clinical assisted toilet.	Not relevant to this room	24	24		50									200 Lux							80		Not applicable to right lighting Second lighting
02.02.24	02	Toilet/Shower/Staff Locker Room	121	2.70	150 Lux	19 Glare	44.00 m	01 Ceiling Mounted	01		24 Hours	1 Occupied whole time	1 Clinical assisted shower. 2 Clinical assisted toilet. 3 Clinical assisted shower. 4 Clinical assisted toilet.	Not relevant to this room	24	24		50									200 Lux							80		Not applicable to right lighting Second lighting
02.02.25	02	Toilet/Shower/Staff Locker Room	121	2.70	150 Lux	19 Glare	44.00 m	01 Ceiling Mounted	01		24 Hours	1 Occupied whole time	1 Clinical assisted shower. 2 Clinical assisted toilet. 3 Clinical assisted shower. 4 Clinical assisted toilet.	Not relevant to this room	24	24		50									200 Lux							80		Not applicable to right lighting Second lighting
02.02.26	02	Toilet/Shower/Staff Locker Room	121	2.70	150 Lux	19 Glare	44.00 m	01 Ceiling Mounted	01		24 Hours	1 Occupied whole time	1 Clinical assisted shower. 2 Clinical assisted toilet. 3 Clinical assisted shower. 4 Clinical assisted toilet.	Not relevant to this room	24	24		50									200 Lux							80		Not applicable to right lighting Second lighting
02.02.27	02	Toilet/Shower/Staff Locker Room	121	2.70	150 Lux	19 Glare	44.00 m	01 Ceiling Mounted	01		24 Hours	1 Occupied whole time	1 Clinical assisted shower. 2 Clinical assisted toilet. 3 Clinical assisted shower. 4 Clinical assisted toilet.	Not relevant to this room	24	24		50									200 Lux							80		Not applicable to right lighting Second lighting
02.02.28	02	Toilet/Shower/Staff Locker Room	121	2.70	150 Lux	19 Glare	44.00 m	01 Ceiling Mounted	01		24 Hours	1 Occupied whole time	1 Clinical assisted shower. 2 Clinical assisted toilet. 3 Clinical assisted shower. 4 Clinical assisted toilet.	Not relevant to this room	24	24		50									200 Lux							80		Not applicable to right lighting Second lighting
02.02.29	02	Toilet/Shower/Staff Locker Room	121	2.70	150 Lux	19 Glare	44.00 m	01 Ceiling Mounted	01		24 Hours	1 Occupied whole time	1 Clinical assisted shower. 2 Clinical assisted toilet. 3 Clinical assisted shower. 4 Clinical assisted toilet.	Not relevant to this room	24	24		50									200 Lux							80		Not applicable to right lighting Second lighting
02.02.30	02	Toilet/Shower/Staff Locker Room	121	2.70	150 Lux	19 Glare	44.00 m	01 Ceiling Mounted	01		24 Hours	1 Occupied whole time	1 Clinical assisted shower. 2 Clinical assisted toilet. 3 Clinical assisted shower. 4 Clinical assisted toilet.	Not relevant to this room	24	24		50									200 Lux							80		Not applicable to right lighting Second lighting
02.02.31	02	Toilet/Shower/Staff Locker Room	121	2.70	150 Lux	19 Glare	44.00 m	01 Ceiling Mounted	01		24 Hours	1 Occupied whole time	1 Clinical assisted shower. 2 Clinical assisted toilet. 3 Clinical assisted shower. 4 Clinical assisted toilet.	Not relevant to this room	24	24		50									200 Lux							80		Not applicable to right lighting Second lighting
02.02.32	02	Toilet/Shower/Staff Locker Room	121	2.70	150 Lux	19 Glare	44.00 m	01 Ceiling Mounted	01		24 Hours	1 Occupied whole time	1 Clinical assisted shower. 2 Clinical assisted toilet. 3 Clinical assisted shower. 4 Clinical assisted toilet.	Not relevant to this room	24	24		50									200 Lux							80		Not applicable to right lighting Second lighting
02.02.33	02	Toilet/Shower/Staff Locker Room	121	2.70	150 Lux	19 Glare	44.00 m	01 Ceiling Mounted	01		24 Hours	1 Occupied whole time	1 Clinical assisted shower. 2 Clinical assisted toilet. 3 Clinical assisted shower. 4 Clinical assisted toilet.	Not relevant to this room	24	24		50									200 Lux							80		Not applicable to right lighting Second lighting
02.02.34	02	Toilet/Shower/Staff Locker Room	121	2.70	150 Lux	19 Glare	44.00 m	01 Ceiling Mounted	01		24 Hours	1 Occupied whole time	1 Clinical assisted shower. 2 Clinical assisted toilet. 3 Clinical assisted shower. 4 Clinical assisted toilet.	Not relevant to this room	24	24		50									200 Lux							80		Not applicable to right lighting Second lighting
02.02.35	02	Toilet/Shower/Staff Locker Room	121	2.70	150 Lux	19 Glare	44.00 m	01 Ceiling Mounted	01		24 Hours	1 Occupied whole time	1 Clinical assisted shower. 2 Clinical assisted toilet. 3 Clinical assisted shower. 4 Clinical assisted toilet.	Not relevant to this room	24	24		50									200 Lux							80		Not applicable to right lighting Second lighting
02.02.36	02	Toilet/Shower/Staff Locker Room	121	2.70	150 Lux	19 Glare	44.00 m	01 Ceiling Mounted	01		24 Hours	1 Occupied whole time	1 Clinical assisted shower. 2 Clinical assisted toilet. 3 Clinical assisted shower. 4 Clinical assisted toilet.	Not relevant to this room	24	24		50									200 Lux							80		Not applicable to right lighting Second lighting
02.02.37	02	Toilet/Shower/Staff Locker Room	121	2.70	150 Lux	19 Glare	44.00 m	01 Ceiling Mounted	01		24 Hours	1 Occupied whole time	1 Clinical assisted shower. 2 Clinical assisted toilet. 3 Clinical assisted shower. 4 Clinical assisted toilet.	Not relevant to this room	24	24		50									200 Lux							80		Not applicable to right lighting Second lighting
02.02.38	02	Toilet/Shower/Staff Locker Room	121	2.70	150 Lux	19 Glare	44.00 m	01 Ceiling Mounted	01		24 Hours	1 Occupied whole time	1 Clinical assisted shower. 2 Clinical assisted toilet. 3 Clinical assisted shower. 4 Clinical assisted toilet.	Not relevant to this room	24	24		50									200 Lux							80		Not applicable to right lighting Second lighting
02.02.39	02	Toilet/Shower/Staff Locker Room	121	2.70	150 Lux	19 Glare	44.00 m	01 Ceiling Mounted	01		24 Hours	1 Occupied whole time	1 Clinical assisted shower. 2 Clinical assisted toilet. 3 Clinical assisted shower. 4 Clinical assisted toilet.	Not relevant to this room	24	24		50									200 Lux							80		Not applicable to right lighting Second lighting
02.02.40	02	Toilet/Shower/Staff Locker Room	121	2.70	150 Lux	19 Glare	44.00 m	01 Ceiling Mounted	01		24 Hours	1 Occupied whole time	1 Clinical assisted shower. 2 Clinical assisted toilet. 3 Clinical assisted shower. 4 Clinical assisted toilet.	Not relevant to this room	24	24		50									200 Lux							80		Not applicable to right lighting Second lighting
02.02.41	02	Toilet/Shower/Staff Locker Room	121	2.70	150 Lux	19 Glare	44.00 m	01 Ceiling Mounted	01		24 Hours	1 Occupied whole time	1 Clinical assisted shower. 2 Clinical assisted toilet. 3 Clinical assisted shower. 4 Clinical assisted toilet.	Not relevant to this room	24	24		50									200 Lux							80		Not applicable to right lighting Second lighting
02.02.42	02	Toilet/Shower/Staff Locker Room	121	2.70	150 Lux	19 Glare	44.00 m	01 Ceiling Mounted	01		24 Hours	1 Occupied whole time	1 Clinical assisted shower. 2 Clinical assisted toilet. 3 Clinical assisted shower. 4 Clinical assisted toilet.	Not relevant to this room	24	24		50									200 Lux							80		Not applicable to right lighting Second lighting
02.02.43	02	Toilet/Shower/Staff Locker Room	121	2.70	150 Lux	19 Glare	44.00 m	01 Ceiling Mounted	01		24 Hours	1 Occupied whole time	1 Clinical assisted shower. 2 Clinical assisted toilet. 3 Clinical assisted shower. 4 Clinical assisted toilet.	Not relevant to this room	24	24		50									200 Lux							80		Not applicable to right lighting Second lighting
02.02.44	02	Toilet/Shower/Staff Locker Room	121	2.70	150 Lux	19 Glare	44.00 m	01 Ceiling Mounted	01		24 Hours	1 Occupied whole time	1 Clinical assisted shower. 2 Clinical assisted toilet. 3 Clinical assisted shower. 4 Clinical assisted toilet.	Not relevant to this room	24	24		50									200 Lux							80		Not applicable to right lighting Second lighting
02.02.45	02	Toilet/Shower/Staff Locker Room	121	2.70	150 Lux	19 Glare	44.00 m	01 Ceiling Mounted	01		24 Hours	1 Occupied whole time	1 Clinical assisted shower. 2 Clinical assisted toilet. 3 Clinical assisted shower. 4 Clinical assisted toilet.	Not relevant to this room	24	24		50									200 Lux							80		Not applicable to right lighting Second lighting
02.02.46	02	Toilet/Shower/Staff Locker Room	121	2.70	150 Lux	19 Glare	44.00 m	01 Ceiling Mounted	01		24 Hours	1 Occupied whole time	1 Clinical assisted shower. 2 Clinical assisted toilet. 3 Clinical assisted shower. 4 Clinical assisted toilet.	Not relevant to this room	24	24		50									200 Lux							80		Not applicable to right lighting Second lighting
02.02.47	02	Toilet/Shower/Staff Locker Room	121	2.70	150 Lux	19 Glare	44.00 m	01 Ceiling Mounted	01		24 Hours	1 Occupied whole time	1 Clinical assisted shower. 2 Clinical assisted toilet. 3 Clinical assisted shower. 4 Clinical assisted toilet.	Not relevant to this room	24	24		50									200 Lux							80		Not applicable to right lighting Second lighting
02.02.48	02	Toilet/Shower/Staff Locker Room	121	2.70	150 Lux	19 Glare	44.00 m	01 Ceiling Mounted	01		24 Hours	1 Occupied whole time	1 Clinical assisted shower. 2 Clinical assisted toilet. 3 Clinical assisted shower. 4 Clinical assisted toilet.	Not relevant to this room	24	24		50									200 Lux							80		Not applicable to right lighting Second lighting
02.02.49	02	Toilet/Shower/Staff Locker Room	121	2.70	150 Lux	19 Glare	44.00 m	01 Ceiling Mounted	01		24 Hours	1 Occupied whole time	1 Clinical assisted shower. 2 Clinical assisted toilet. 3 Clinical assisted shower. 4 Clinical assisted toilet.	Not relevant to this room	24	24		50									200 Lux							80		Not applicable to right lighting Second lighting
02.02.50	02	Toilet/Shower/Staff Locker Room	121	2.70	150 Lux	19 Glare	44.00 m	01 Ceiling Mounted	01		24 Hours	1 Occupied whole time	1 Clinical assisted shower. 2 Clinical assisted toilet. 3 Clinical assisted shower. 4 Clinical assisted toilet.	Not relevant to this room	24	24		50									200 Lux							80		Not applicable to right lighting Second lighting
02.02.51	02	Toilet/Shower/Staff Locker Room	121	2.70	150 Lux	19 Glare	44.00 m	01 Ceiling Mounted	01		24 Hours	1 Occupied whole time	1 Clinical assisted shower. 2 Clinical assisted toilet. 3 Clinical assisted shower. 4 Clinical assisted toilet.	Not relevant to this room	24	24		50									200 Lux							80		Not applicable to right lighting Second lighting
02.02.52	02	Toilet/Shower/Staff Locker Room	121	2.70	150 Lux	19 Glare	44.00 m	01 Ceiling Mounted	01		24 Hours	1 Occupied whole time	1 Clinical assisted shower. 2 Clinical assisted toilet. 3 Clinical assisted shower. 4 Clinical assisted toilet.	Not relevant to this room	24	24		50									200 Lux							80		Not applicable to right lighting Second lighting
02.02.53	02	Toilet/Shower/Staff Locker Room	121	2.70	150 Lux	19 Glare	44.00 m	01 Ceiling Mounted	01		24 Hours	1 Occupied whole time	1 Clinical assisted shower. 2 Clinical assisted toilet. 3 Clinical assisted shower. 4 Clinical assisted toilet.	Not relevant to this room	24	24		50									200 Lux							80		Not applicable to right lighting Second lighting
02.02.54	02	Toilet/Shower/Staff Locker Room	121	2.70	150 Lux	19 Glare	44.00 m	01 Ceiling Mounted	01		24 Hours	1 Occupied whole time	1 Clinical assisted shower. 2 Clinical assisted toilet. 3 Clinical assisted shower. 4 Clinical assisted toilet.	Not relevant to this room	24	24		50									200 Lux							80		Not applicable to right lighting Second lighting
02.02.55	02	Toilet/Shower/Staff Locker Room	121	2.70	150 Lux	19 Glare	44.00 m	01 Ceiling Mounted	01		24 Hours	1 Occupied whole time	1 Clinical assisted shower. 2 Clinical assisted toilet. 3 Clinical assisted shower. 4 Clinical assisted toilet.	Not relevant to this room	24	24		50									200 Lux							80		Not applicable to right lighting Second lighting
02.02.56	02	Toilet/Shower/Staff Locker Room	121	2.70	150 Lux	19 Glare	44.00 m	01 Ceiling Mounted	01		24 Hours	1 Occupied whole time	1 Clinical assisted shower. 2 Clinical assisted toilet. 3 Clinical assisted shower. 4 Clinical assisted toilet.	Not relevant to this room	24	24		50									200 Lux							80		Not applicable to right lighting Second lighting
02.02.57	02	Toilet/Shower/Staff Locker Room	121	2.70	150 Lux	19 Glare	44.00 m	01 Ceiling Mounted	01		24 Hours	1 Occupied whole time	1 Clinical assisted shower. 2 Clinical assisted toilet. 3 Clinical assisted shower. 4 Clinical assisted toilet.	Not relevant to this room	24	24		50									200 Lux							80		Not applicable to right lighting Second lighting
02.02.58	02	Toilet/Shower/Staff Locker Room	121	2.70	150 Lux	19 Glare	44.00 m	01 Ceiling Mounted	01		24 Hours	1 Occupied whole time	1 Clinical assisted shower. 2 Clinical assisted toilet. 3 Clinical assisted shower. 4 Clinical assisted toilet.	Not relevant to this room	24	24		50									200 Lux							80		Not applicable to right lighting Second lighting
02.02.59	02	Toilet/Shower/Staff Locker Room	121	2.70	150 Lux	19 Glare	44.00 m	01 Ceiling Mounted	01		24 Hours	1 Occupied whole time	1 Clinical assisted shower. 2 Clinical assisted toilet. 3 Clinical assisted shower. 4 Clinical assisted toilet.	Not relevant to this room	24	24		50									200 Lux							80		Not applicable to right lighting Second lighting
02.02.60	02	Toilet/Shower/Staff Locker Room	121	2.70	150 Lux	19 Glare	44.00 m	01 Ceiling Mounted	01		24 Hours	1 Occupied whole time	1 Clinical assisted shower. 2 Clinical assisted toilet. 3 Clinical assisted shower. 4 Clinical assisted toilet.	Not relevant to this room	24	24		50									200 Lux							80		Not applicable to right lighting Second lighting
02.02.61	02	Toilet/Shower/Staff Locker Room	121	2.70	150 Lux	19 Glare	44.00 m	01 Ceiling Mounted	01		24 Hours	1 Occupied whole time	1 Clinical assisted shower. 2 Clinical assisted toilet. 3 Clinical assisted shower. 4 Clinical assisted toilet.	Not relevant to this room	24	24		50									200 Lux							80		Not applicable to right lighting Second lighting
02.02.62	02	Toilet/Shower/Staff Locker Room	121	2.70	150 Lux	19 Glare	44.00 m	01 Ceiling Mounted	01		24 Hours	1 Occupied whole time	1 Clinical assisted shower. 2 Clinical assisted toilet. 3 Clinical assisted shower. 4 Clinical assisted toilet.	Not relevant to this room	24	24		50									200 Lux							80		Not applicable to right lighting Second lighting
02.02.63	02	Toilet/Shower/Staff Locker Room	121	2.70	150 Lux	19 Glare	44.00 m	01 Ceiling Mounted	01		24 Hours	1 Occupied whole time	1 Clinical assisted shower. 2 Clinical assisted toilet. 3 Clinical assisted shower. 4 Clinical assisted toilet.	Not relevant to this room	24	24		50									200 Lux							80		Not applicable to right lighting Second lighting
02.02.64	02	Toilet/Shower/Staff Locker Room	121	2.70	150 Lux	19 Glare	44.00 m	01 Ceiling Mounted	01		24 Hours	1 Occupied whole time	1 Clinical assisted shower. 2 Clinical assisted toilet. 3 Clinical assisted shower. 4 Clinical assisted toilet.	Not relevant to this room	24	24		50									200 Lux							80		Not applicable to right lighting Second lighting
02.02.65	02	Toilet/Shower/Staff Locker Room	121	2.70	150 Lux	19 Glare	44.00 m	01 Ceiling Mounted	01		24 Hours	1 Occupied whole time	1 Clinical assisted shower. 2 Clinical assisted toilet. 3 Clinical assisted shower. 4 Clinical assisted toilet.	Not relevant to this room	24	24		50									200 Lux							80		Not applicable to right lighting Second lighting
02.02.66	02	Toilet/Shower/Staff Locker Room	121	2.70	150 Lux	19 Glare	44.00 m	01 Ceiling Mounted	01		24 Hours	1 Occupied whole time	1 Clinical assisted shower. 2 Clinical assisted toilet. 3 Clinical assisted shower. 4 Clinical assisted toilet.	Not relevant to this room	24	24		50									200 Lux							80		Not applicable to right lighting Second lighting
02.02.67	02	Toilet/Shower/Staff Locker Room	121	2.70	150 Lux	19 Glare	44.00 m	01 Ceiling Mounted	01		24 Hours	1 Occupied whole time	1 Clinical assisted shower. 2 Clinical assisted toilet. 3 Clinical assisted shower. 4 Clinical assisted toilet.	Not relevant to this room	24	24		50									200 Lux							80		Not applicable to right lighting Second lighting
02.02.68	02	Toilet/Shower/Staff Locker Room	121	2.70	150

Lighting	Illumination Notes	Safety	Safety	Safety	
Standby Lighting Duty Notes		Hot Surface Temperature deg C	Hot Water Temperature deg C	Safety Temperature Notes	General Safety Notes
Lighting of the load and quality equal or nearly equal to that provided	Type of control: N/A = Manual; 1 = Switches; 2 = Variable/Dim; 3 = Occ	41		Maximum hot water temperature to be achieved or complied to with	
Lighting of the load and quality equal or nearly equal to that provided	Type of control: N/A = Manual; 1 = Switches; 2 = Variable/Dim; 3 = Occ	41		Maximum hot water temperature to be achieved or complied to with	
Lighting of the load and quality equal or nearly equal to that provided	Type of control: N/A = Manual; 1 = Switches; 2 = Variable/Dim; 3 = Occ	41	43	Maximum hot water temperature to be achieved or complied to with	
Lighting of the load and quality equal or nearly equal to that provided	Type of control: N/A = Manual; 1 = Switches; 2 = Variable/Dim; 3 = Occ	41	43	Maximum hot water temperature to be achieved or complied to with	
Lighting of the load and quality equal or nearly equal to that provided	Type of control: N/A = Manual; 1 = Switches; 2 = Variable/Dim; 3 = Occ	41	43	Maximum hot water temperature to be achieved or complied to with	
Lighting of the load and quality equal or nearly equal to that provided	Type of control: N/A = Manual; 1 = Switches; 2 = Variable/Dim; 3 = Occ	41		Maximum hot water temperature to be achieved or complied to with	
Lighting of the load and quality equal or nearly equal to that provided	Type of control: N/A = Manual; 1 = Switches; 2 = Variable/Dim; 3 = Occ	41		Maximum hot water temperature to be achieved or complied to with	
Lighting of the load and quality equal or nearly equal to that provided	Type of control: N/A = Manual; 1 = Switches; 2 = Variable/Dim; 3 = Occ	41	43

Re: Worshop and meeting re PPVL rooms

INKSTER, Teresa (NHS GREATER GLASGOW & CLYDE)

Tue 27/02/2018 12:42

To:Peters Christine (NHS GREATER GLASGOW & CLYDE) [redacted]

Cc:Powrie Ian (NHS GREATER GLASGOW & CLYDE) [redacted]

Thanks. There will be a meeting to discuss at some point
T

Dr Teresa Inkster
Lead Infection Control Doctor NHSGGC
Training Programme Director Medical Microbiology
Dept of Microbiology
Queen Elizabeth University Hospital
Glasgow
[redacted]

From: Peters, Christine [redacted]
Sent: 21 February 2018 18:39
To: INKSTER, Teresa (NHS GREATER GLASGOW & CLYDE)
Cc: Powrie Ian (NHS GREATER GLASGOW & CLYDE)
Subject: Worshop and meeting re PPVL rooms

Dear Teresa,

I attended the workshop organised by Ian regarding PPVL rooms and then a discussion group with the designers , Malcolm Thomas and Dr Blanca Beato-Arribas from BSRIA regarding the proposed plans for PPVL change into neg pressure rooms. I attach a summary of my notes from the day for your interest.

Ian let me know if you think anything I have written is inaccurate.

What follows is my own views after this meeting , and not necessarily those of others:

I suggest that while it is possible to change the ITU rooms into negative pressure suites some basic questions need to be addressed first:

An overarching organisational plan for isolation of:

1. Non critically ill patients with cat 3 airborne infections – is ITU the best place for them?
2. Critically ill patients with Cat 3 organisms - negative pressure suite provision , needs clear differentiation form PPVL rooms in terms of instructions and staff training
3. Potential cat 4 patients which are non-airborne, or are potentially airborne – of course this is more a national discussion in terms of any new unit specs.
4. A+E/ Admissions unit isolation facilities
5. ID unit
6. Immune compromised patients who need critical care or rare infectious
    - These questions relate to both adult and children hospitals

- An entrance on the risk register of the shortcomings of the PPVL rooms we have with regard to air mixing (may find its ok on BSRIA testing, but dubious) need for removal of dampeners, provision of alarms , fixing of baffles, rebalancing of extract in toilet, doors being hung wrong way.
- Need for a scoping exercise for changes to ventilation for some areas -, CF, ID ? Haemonc ? renal transplant - including the cheapest and easiest option of ducts being external to the building as suggested by Malcolm
- Need for the GRI room to be replaced if it is correct that it is still one that has 2 modes

I intend to write to both Blanca and Malcolm as I have a series of questions regarding gaps in the data they provided , I will copy you both into this correspondence.

kr

Christine

Dr Christine Peters
Consultant Microbiologist
Queen Elizabeth University Hospital,
GGC
[redacted]
[redacted]

A49618520

Re: QEUH - Conversion of 'PPVL' Isolation Suite to Negative Pressure ID suite

INKSTER, Teresa (NHS GREATER GLASGOW & CLYDE)

Mon 23/04/2018 08:21

To: Powrie Ian (NHS GREATER GLASGOW & CLYDE) [redacted]; Hague Rosemary (NHS GREATER GLASGOW & CLYDE) [redacted] Mcneil Elaine (NHS GREATER GLASGOW & CLYDE) <[redacted] Traquair-smith Ann (NHS GREATER GLASGOW & CLYDE) [redacted] Peters Seija (NHS GREATER GLASGOW & CLYDE) <Erica.Peters[redacted] Pritchard Lynn (NHS GREATER GLASGOW & CLYDE) <Lynn.Pritchard[redacted]; Devine, Sandra [redacted] brian.jones@[redacted] 'peter.hinshelwood@[redacted] [redacted] Marek, Aleksandra <Aleksandra.Marek[redacted] Mcintyre Hazel (NHS GREATER GLASGOW & CLYDE) [redacted]; Russell Steven (NHS GREATER GLASGOW & CLYDE) <[redacted]

Cc: Hamilton Pauline (NHS GREATER GLASGOW & CLYDE) [redacted] Cox, Donna <[redacted] Redfern James (NHS GREATER GLASGOW & CLYDE) [redacted]uk>; Hendry Scott (NHS GREATER GLASGOW & CLYDE) [redacted]; neil.spenceley@[redacted] Walsh Thomas (NHS GREATER GLASGOW & CLYDE) [redacted]

Hi all - further to the meeting on Friday I am happy to sign off these plans from an Infection Control perspective

Kind regards
Teresa

Dr Teresa Inkster
Lead Infection Control Doctor NHSGGC
Training Programme Director Medical Microbiology
Dept of Microbiology
Queen Elizabeth University Hospital
Glasgow
[redacted]

From: Powrie, Ian [redacted]
Sent: 20 April 2018 16:49
To: Hague Rosemary (NHS GREATER GLASGOW & CLYDE); Mcneil Elaine (NHS GREATER GLASGOW & CLYDE); INKSTER, Teresa (NHS GREATER GLASGOW & CLYDE); Ic Doctor, South; Traquair-smith Ann (NHS GREATER GLASGOW & CLYDE); Peters Seija (NHS GREATER GLASGOW & CLYDE); Pritchard Lynn (NHS GREATER GLASGOW & CLYDE); Devine, Sandra; brian.jones[redacted] 'peter.hinshelwood[redacted] 'a.marek[redacted]; Marek, Aleksandra; Mcintyre Hazel (NHS GREATER GLASGOW & CLYDE); Russell Steven (NHS GREATER GLASGOW & CLYDE)

RE: RE: RE: Isolation Rooms - Phase 1 Handover Delay

Traquair Smith, Ann <Ann.TraquairSmith[redacted]

Mon 05/11/2018 10:36

To: Mills, Thomas [redacted]; Thomson Iain (NHS GREATER GLASGOW & CLYDE) [redacted]; Pritchard Lynn (NHS GREATER GLASGOW & CLYDE) [redacted] Mcallister Paul (NHS GREATER GLASGOW & CLYDE) [redacted] Conner Darryl (NHS GREATER GLASGOW & CLYDE) <[redacted] Macdonald, David <[redacted]

Cc: Hutton Melanie (NHS GREATER GLASGOW & CLYDE) <[redacted]; Redfern James (NHS GREATER GLASGOW & CLYDE) [redacted]; Dodd Susan (NHS GREATER GLASGOW & CLYDE) [redacted]; Russell Steven (NHS GREATER GLASGOW & CLYDE) </o=MAIL/ou=NHSFB10/cn=Recipients/cn=LJ6L4CSC>; Valyraki, Kalliopi <[redacted]; INKSTER, Teresa (NHS GREATER GLASGOW & CLYDE) [redacted] alison.balfour@[redacted];

Thomas,

Do you have an understanding why they failed please? This obviously has a potential impact on Phase 2 starting.

Regards
Ann

From: Mills, Thomas
Sent: 05 November 2018 09:10
To: Traquair Smith, Ann; Thomson, Iain; Pritchard, Lynn; Mcallister, Paul; Conner, Darryl James; Macdonald, David
Cc: Hutton, Melanie; Redfern, Jamie; Dodd, Susie; Russell, Steve; Valyraki, Kalliopi; Inkster, Teresa (NHSmail); Balfour, Alison
Subject: RE: RE: RE: Isolation Rooms - Phase 1 Handover Delay

Dear All,

Despite the optimism on Friday with the programme dates, the contractor has since advised that the Phase 1 Isolation Rooms have failed their validation testing and are unable to be commissioned. The contractor, commissioning engineers and designers are currently discussing the options available to commission the rooms as soon as possible. At this moment in time I'm unable to advise of a date for handover however we will continue to push for a revised date as soon as possible. I will hopefully be in a position to provide a fuller update later today.

Understanding the critical nature of these rooms and the urgency required for handover we are continuing to apply pressure on the contactor to achieve handover as soon as possible. The clinical clean planned for this morning has been postponed until the rooms are in a suitable condition and the walk round scheduled for tomorrow will also be postponed until a new handover date is advised.

Kind regards,

Thomas

Thomas Mills | Project Manager - Property & Capital Planning
Tel: [redacted]
thomas.mill[redacted]

From: Mills, Thomas
Sent: 02 November 2018 15:23
To: Traquair Smith, Ann; Thomson, Iain; Pritchard, Lynn; Mcallister, Paul; Conner, Darryl James; Macdonald, David

Cc: Hutton, Melanie; Redfern, Jamie; Dodd, Susie; Russell, Steve; Valyraki, Kalliopi; Inkster, Teresa (NHSmail); Balfour, Alison
Subject: RE: RE: Isolation Rooms - Phase 1 Handover Delay

Dear All,

Further to my previous email please find below an update/confirmation of the key dates for the delivery of the Negative Pressure Isolation Rooms.

- **Phase 2 Start Date**
  - RHC (Ward 2C Rm 6 &CDU Rm 18) – Monday 5th November 2018
  - QEUH (Surg HDU Rm 4) – Wednesday 7th November 2018 (this is subject to the Phase 1 rooms handover on 6th Nov)
- **Phase 2 Completion** (no change from previous programme)
  - RHC – 7th December 2018
  - QEUH – 7th December 2018 (this is subject to Phase 2 starting by 9th Nov)
- **Phase 3 Start Date** – 14th January 2019
- **Phase 3 Completion** – 15th February 2019
- **Remedial work to Phase 1/2 rooms** – duration 1 day per room, start date to be agreed with service teams

If there are any queries on any of this please let me know.

Kind regards,

Thomas

Thomas Mills | Project Manager - Property & Capital Planning
Tel: [redacted]
thomas.mills@[redacted]

From: Mills, Thomas
Sent: 30 October 2018 09:57
To: Traquair Smith, Ann; Thomson, Iain; Pritchard, Lynn; Mcallister, Paul; Conner, Darryl James; Macdonald, David
Cc: Hutton, Melanie; Redfern, Jamie; Dodd, Susie; Russell, Steve
Subject: RE: Isolation Rooms - Phase 1 Handover Delay

Hi Ann,

The contractors have confirmed this morning that the damper swap would be 1 day per room and that the work can be carried out using the existing ceiling hatches.

They are currently revising the programme to take account of the delays, this should be with me on Thursday and I'll issue the key dates accordingly.

Kind regards,

Thomas

Thomas Mills | Project Manager - Property & Capital Planning
Tel: [redacted]
thomas.mills[redacted]

From: Traquair Smith, Ann
Sent: 29 October 2018 20:29
To: Mills, Thomas; Thomson, Iain; Pritchard, Lynn; Mcallister, Paul; Conner, Darryl James; Macdonald, David

Cc: Hutton, Melanie; Redfern, Jamie; Dodd, Susie; Russell, Steve
Subject: Re: Isolation Rooms - Phase 1 Handover Delay

Hi Thomas,

Thank you for the update. Can you advise how long the swap of the installed dampers will take and whether it will mean the room is out of action .

Also what would the completion date of phase 2 work out at please?

Regards
Ann

Sent from my BlackBerry 10 smartphone on the EE network.

From: Mills, Thomas
Sent: Monday, October 29, 2018 4:47 PM
To: Traquair Smith, Ann; Thomson, Iain; Pritchard, Lynn; Mcallister, Paul; Conner, Darryl James; Macdonald, David
Cc: Hutton, Melanie; Redfern, Jamie; Dodd, Susie; Russell, Steve
Subject: Isolation Rooms - Phase 1 Handover Delay

Dear All,

The completion of the first phase of Negative Pressure Isolation Room is growing closer, however it is with regret that the first phase rooms will not be available for handover on Friday 02 November 2018 as originally planned. The contractor has experienced difficulties with the fire dampers being installed as part of the project and the initial consequence of this is that they will not complete the works on the rooms until this coming weekend. We are still awaiting full confirmation of the revised programme however in the interests of advising you as soon as possible the current plan is highlighted below:

- 02/11/18 – Contractor works completed by close of play
- 03/11/18 – Connection, commissioning and testing completed
- 04/11/18 – Contractor deep clean completed
- 05/11/18 – NHS Clinical Clean

On this basis the Phase 1 rooms will be ready for use from 06/11/18 subject to a walk round with the relevant parties once all work has been completed. The room validation documentation will also be issued within this timescale to allow the rooms to be used as negative pressure isolation spaces from the point of handover. The delay to the handover of Phase 1 will have a knock on effect to Phase 2 as the Surg HDU Room 4 will not be taken out of service until the current rooms are handed back. If agreeable there is still the potential that CDU Room 18 and Ward 2c Room 6 could still start on 05/11/18?

In addition to the delay highlighted above it has been identified that the contractor has made an error in the specification of the damper they are using. Assurance has been provided that this will not affect the use of the rooms however there will still be a requirement on the contractor to install the specified gas tight dampers in due course. As each damper has an 6 – 8 week lead time the decision was taken to proceed with the currently supplied dampers to allow the rooms to be returned for operational use (the alternative was to delay the handover of Phase 1 by 6 – 8 weeks). The contractor will then need to access the rooms at a later date (date/time to suit the Service) to carry out a swap of the installed dampers. The full impact of this along with the timescales required for the remedial work are currently being developed and more detail will be issued as and when it becomes available, it should be noted that the remedial work should not be as intrusive as the initial works and should be completed through the new access hatches

within the rooms. Currently this affects the 3 rooms in Phase 1 however there is the potential that this may have an impact on Phase 2 rooms as well – to be determined.

I trust that the above summaries where the project currently is, more detail will be provided as and when available to keep you all informed and there will certainly be the opportunity to discuss further at the next progress meeting on 7th Nov. If however you have any queries or wish to discuss further please don't hesitate to get in touch.

Kind regards,

Thomas

Thomas Mills | Project Manager - Property & Capital Planning
NHS Greater Glasgow & Clyde
Gartnavel Royal Hospital
3rd Floor, Admin Building | Glasgow | G12 0XH
Tel: [redacted]
thomas.mill[redacted]

Re: Isolation Rooms - Phase 1 Handover

INKSTER, Teresa (NHS GREATER GLASGOW & CLYDE)

Tue 13/11/2018 17:08

To:Mills, Thomas [redacted] Traquair-smith Ann (NHS GREATER GLASGOW & CLYDE) [redacted]; Thomson Iain (NHS GREATER GLASGOW & CLYDE)

Cc:Russell Steven (NHS GREATER GLASGOW & CLYDE) [redacted]; Pritchard Lynn (NHS GREATER GLASGOW & CLYDE) [redacted] Valyraki, Kalliopi [redacted] alison.balfour@[redacted] Conner Darryl (NHS GREATER GLASGOW & CLYDE) <[redacted]

Thomas,

This is concerning. The priority is patient safety and not to get the rooms back in to use as soon as possible.

Whilst the rooms may pass commissioning it looks to me like they will deteriorate and the time-scale for this is unclear.

We are talking about the highest risk patient group in terms of infection i.e. airborne transmission and pressure differential is key.

If the rooms are going back into use in the interim I would not be recommending these patients (MDRTB, ? MERs) are placed in them

Kind regards
Teresa

Dr Teresa Inkster
Lead Infection Control Doctor NHSGGC
Training Programme Director Medical Microbiology
Dept of Microbiology
Queen Elizabeth University Hospital
Glasgow
[redacted]

From: Mills, Thomas <Thomas.Mills[redacted]
Sent: 13 November 2018 14:23
To: INKSTER, Teresa (NHS GREATER GLASGOW & CLYDE); Traquair-smith Ann (NHS GREATER GLASGOW & CLYDE); Thomson Iain (NHS GREATER GLASGOW & CLYDE)
Cc: Russell Steven (NHS GREATER GLASGOW & CLYDE); Pritchard Lynn (NHS GREATER GLASGOW & CLYDE); Valyraki, Kalliopi; allson.balfou[redacted] Conner Darryl (NHS GREATER GLASGOW & CLYDE)
Subject: RE: Isolation Rooms - Phase 1 Handover

Dear All,

My apologies for the delay in this update as I had hoped to be able to confirm yesterday what needed to be done in order to commission the isolation rooms.

Currently the rooms are achieving the necessary pressure difference between the corridor and the room however at a reduced air flow rate. This results in reduced control over the heating/cooling of the rooms and reduces the number of air changes (currently ranging from 9 ac/hr to 12 ac/hr depending on the room). There is however a risk to the current setup, the extract fans are operating at their maximum output based on their current configuration and therefore as the HEPA filters become clogged over time the rooms will fail to maintain the necessary pressure difference. The timescale for this indefinable but may be a matter of weeks.

The design team are currently developing an option to adjust how the extract fans operate to reduce the risk caused by the HEPA filter clogging. This would not be a long term fix however it would be sufficient in order to achieve the criteria required to commission the rooms. This fix (if viable) should be sufficient to assure the use of the rooms through the winter pressure period. The priority is to return the rooms to service as soon as possible and the designers are working to achieve this. In parallel they are also assessing the options available to achieve a long term solution to the current issues.

I don't currently have a defined timescale for the resolution of the current issues. The option being developed would be an off the shelf solution which should minimise the time required to complete the works. We are continuing to have discussions with the design team to deliver a solution as soon as possible and to ensure that all involved are aware of the level of urgency required to re-commission the rooms.

I will provide further updates as this progresses.

Kind regards,

Thomas

Thomas Mills | Project Manager - Property & Capital Planning
Tel: [redacted]
thomas.mills[redacted]

From: INKSTER, Teresa (NHS GREATER GLASGOW & CLYDE) [mailto:teresa.inkste[redacted]
Sent: 13 November 2018 11:09
To: Traquair Smith, Ann; Mills, Thomas; Thomson, Iain
Cc: Russell, Steve; Pritchard, Lynn; Valyraki, Kalliopi; Balfour, Alison; Conner, Darryl James
Subject: [ExternaltoGGC]Re: Isolation Rooms - Phase 1 Handover

Hi Thomas

Is there any update?

Teresa

Dr Teresa Inkster
Lead Infection Control Doctor NHSGGC
Training Programme Director Medical Microbiology
Dept of Microbiology
Queen Elizabeth University Hospital
Glasgow
[redacted]

From: Traquair Smith, Ann <Ann.TraquairSmith[redacted]
Sent: 09 November 2018 16:53
To: Mills, Thomas; Thomson Iain (NHS GREATER GLASGOW & CLYDE)
Cc: Russell Steven (NHS GREATER GLASGOW & CLYDE); Pritchard Lynn (NHS GREATER GLASGOW & CLYDE); Valyraki, Kalliopi; INKSTER, Teresa (NHS GREATER GLASGOW & CLYDE); alison.balfou[redacted]
Conner Darryl (NHS GREATER GLASGOW & CLYDE)
Subject: Re: Isolation Rooms - Phase 1 Handover

Thomas,

This is very disappointing and as are approaching, if not already there, the busiest period for our department and the site..It's imperative we get these rooms back as soon as possible

I'll await Mondays update

Regards
Ann

Sent from my BlackBerry 10 smartphone on the EE network.

From: Mills, Thomas
Sent: Friday, November 9, 2018 4:44 PM
To: Traquair Smith, Ann; Thomson, Iain
Cc: Russell, Steve; Pritchard, Lynn; Valyraki, Kalliopi; Inkster, Teresa (NHSmail); Balfour, Alison; Conner, Darryl James
Subject: Isolation Rooms - Phase 1 Handover

Ann / Iain,

I've just been informed by our contractors and in particular the commissioning engineers that there appears to be a further issue with the ventilation systems serving the Phase 1 Isolation Rooms. The information is currently fairly limited at this point as the team are currently trying to establish exactly what the issue is and how it can be resolved, this email is intended to provide you with an early warning for the rooms.

As things stand the rooms are not achieving the design intended pressure difference between the corridor/lobby/room, they are however operating as a negative pressure environment albeit not to the intended scale (this was a parameter set early in the project and is not to any specific SHTM). The commissioning engineers are continuing to work on the system to achieve the best possible figures to allow this to be discussed with the designers on Monday morning to understand the impact (if any) and any additional work required. As any further work would be contained within the plant rooms the clinical clean will still take place this weekend but the rooms will not be operational on Monday.

I appreciate the frustration that this will cause and the urgent need to return these rooms to service. Following discussions with the design team on Monday I will provide a further update on what the impact of the issue is, any work required to resolve it and the associated timescale.

Kind regards,

Thomas

Thomas Mills | Project Manager - Property & Capital Planning
NHS Greater Glasgow & Clyde
Gartnavel Royal Hospital

3rd Floor, Admin Building | Glasgow | G12 0XH
Tel: [redacted]
thomas.mills[redacted]

Negative pressure rooms and concerns relating to other lobied rooms on QEUH RHC site

Dodd, Susie [redacted]

Wed 05/12/2018 17:55

To:INKSTER, Teresa (NHS GREATER GLASGOW & CLYDE) [redacted]

Cc:Devine, Sandra [redacted] Walsh Thomas (NHS GREATER GLASGOW & CLYDE) [redacted]; Pritchard Lynn (NHS GREATER GLASGOW & CLYDE) [redacted]

Hi Teresa,

I attended a meeting this afternoon which was convened to provide update on the progress of the negative pressure rooms being developed on the QEUH and RHC site. A number of concerns were brought to the attention of the group by capital planning colleagues including;

- The fans applied to the duct work in the adult ITU rooms which allow negative pressure to be generated are working at full capacity and are not achieving the desired negative pressure requirements. Initial thoughts were that this was due to leaks in the duct work however this is seeming less likely and there is little confidence that new fans will fix the problem. Meantime, the rooms as you know, must not be used for any patients requiring TBPs.
- It was initially reported at the start of the meeting that there was a level of confidence that the RHC rooms currently closed for the same works, would meet validation requirements as the duct work appears very different. A report received during the meeting confirmed that these rooms are not achieving the desired negative pressure requirements and in fact are achieving even lower rates of negative air pressure than the adult site.
- The remaining phase of works to upgrade rooms has now been halted as clinical colleagues are not willing to close off any further beds to allow works to go ahead when the problem from the previous phases has not yet been identified.
- There are concerns that the flow of air in all other lobbied rooms in the hospital is not adequate for infectious patients and as a result it was voiced that there is a risk that infectious particles from within these rooms may have been disseminated into the main wards. Capital planning colleagues raised concern that the rooms occupied by Ebola and MDR TB patients in the adult hospital may not have provided adequate protection. Furthermore, there are concerns that the duct work is now contaminated and as a result they are keen to fog the duct work to ensure that no contamination, if any, remains.

Clinical colleagues at the meeting were understandably concerned by this report and any historical and immediate risk presented to patients. They are eager to establish what areas are safe to be occupied by patients with known infections and whether there is any look back required of high risk cases.

I have agreed that I would feed this information back to you and stressed that the IPCT can not take a view on this without the relevant validation reports of each of the rooms. I felt that whilst they were expressing real concern, there was no hard evidence to view or take from the meeting. Estates report that around 80% of the lobbied rooms have been validated recently.

Following the meeting, the GM for adults and CSM for paeds were to brief their own management teams on the findings. Estates are going to arrange for fogging of the vents to be carried out (I have not given an opinion on whether or not this is necessary or not). Capital planning and estates will liaise to collate the relevant documentation around validation reports.

Kind regards,
Susie

A49618520

Susie Dodd
Lead Infection Prevention and Control Nurse
Royal Hopsital for Children
[redacted]

<Alan.Gallacher[redacted]; McIntyre, Hazel[redacted]
Purdon, Colin[redacted]
Subject: RE: Isolation Rooms - Commissioning Delay

Darryl,

The 3 critical care rooms that are affected by these works were agreed to be returned to service on a temporary basis for non infectious patients. This was agreed with yourselves, Teresa Inkster and Ann Traquair-Smith on the very strict basis that we are returning the rooms for use as standard critical care beds. The only difference would be that the beds will be within a negative pressure environment however will not be identified for use as a negative pressure isolation rooms.

I fully accept that the guidance within SHPN 04 Supplement 1 states that for negative pressure isolation rooms we would need the filtration on the extract system due to the lack of a 3m extract vent. We are however only using the rooms for standard critical care patients whom are neither immunocompromised or infectious. The bed spaces provided would be an addition to the existing critical care ward they are not intended to be Infectious Diseases Isolation Rooms. The ventilation system as it is currently running achieves the air changes required to meet the guidance for critical care bed spaces and is no different in this respect to the air changes within the rest of the critical care ward. The current setup provides a balanced negative pressure system within the 3 rooms, there is no requirement to provide PPVL rooms in order for them to be used clinically.

Just to confirm that the current solution is only being provided on a temporary basis. The design work remains ongoing to provide a solution to meet the negative pressure isolation room requirement for infectious patients. This work will be delivered early next year with the exact timescale to be confirmed once a design solution for the extract system has been agreed.

If your concern relates to non compliance to a specific standard can you please advise what this is in order that we can develop a solution that meets any regulatory requirement? As it stand we believe that temporary solution being provided meets the requirements both regulatory and clinically with patient use identified above and agreed at the meeting on 15 November 2018.

Regards,

Thomas

Thomas Mills | Project Manager - Property & Capital Planning
Tel:[redacted]
thomas.mills[redacted]

From: Conner, Darryl James
Sent: 28 November 2018 19:02
To: Russell, Steve
Cc: Wilson, Andy; Gallacher, Alan; Mills, Thomas; McIntyre, Hazel; Purdon, Colin
Subject: RE: Isolation Rooms - Commissioning Delay

Steve,

Thomas,

I agree that there is no requirement to provide PPVL rooms, but how else can we justify that they can be used for any other clinical application in their current state other than this?

Of course the clinical team can intend to use these rooms for standard use only, but is there a mitigation document in place for this acceptation and has it been approved by the AE ?

Due to the physical construction of this room and its ventilation construction and set up, I believe as a minimum the rooms should not be used for any application without the extract filtration being re installed, that is where I believe the non-compliance to exist even in a temporary condition like now. Removal of these filters does not provide huge gains in achieving the air change rate or pressure regime required especially now that the intended temporary application is for normal use only nor does it mitigate the requirement for larger fans to achieve a sustainable environment when this application is approved in the new year as we have already agreed. If the temporary solution cannot be re assessed to at least re-install the extract filtration for the adjacent stated reasons, we could look at the noise levels, after visiting bed 24 fed from 21-AHU -13 the space is now extremely noisy due to the new negative regime and removed filtration, aside for the legal requirement that extract filtration must be fitted to this construction of duct work for any application, at a bare minimum the re fitting of extract filters will provide an attenuation effect on the system and will reduce the verified noise levels from NR52/DB 57 to a compliant level of NR-30/D.B 35 or less which could then be monitored until the permanent solution and final condition of these rooms are in place.

Regards
Darryl

Darryl James Conner MIHEEM
Interim Site Manager Operational Estates (SMOE)
Queen Elizabeth University Hospital Campus,
Labs Bldg.
1345 Govan Rd
Glasgow
G51 4TF

[redacted]

From: Mills, Thomas
Sent: 30 November 2018 12:33
To: Conner, Darryl James [redacted]; Russell, Steve [redacted]
Cc: Wilson, Andy [redacted]; Gallacher, Alan

Sector Estates Manager (South)

[redacted]

From: Russell, Steve
Sent: 03 December 2018 14:28
To: Gallacher, Alan [redacted]; Wilson, Andy [redacted]
Cc: McIntyre, Hazel [redacted]
Subject: RE: Isolation Rooms - Commissioning Delay
Importance: High

Alan/Andy,

We need to put a stop to this and a final decision made as to whether these rooms are to be used or not. So far we've had it stated that the rooms won't meet building requirements and now that they can't be used for normal patients unless they're commissioned as PPVL with the filtration in place even although the ultimate intention is for them to be negative pressure. Estates, Capital Planning, Teresa Inkster and Ann Traquare-Smith collectively agreed the way forward with this at our meeting on the 15th November and on the understanding that the most appropriate measure was not to install the filters andnot use the rooms for any infectious patients requiring isolation. In the interim they would be deemed to be conventional clinical single rooms. Any mitigation strategy or SOPS around this during the temporary period would be for the clinical side to develop in support of this strategy.

We are all sighted on the fact the performance of the extract systems for these spaces are not operating as they should and may well never have been. Maintaining hepa filtration will only serve to reduce the air flow rates further as they deteriorate requiring their replacement at regular intervals perhaps weekly or less as well as requiring continuous monitoring, these facts were recognised and formed part of this decision. It's noted that the AE may require an input which is fine although we believe it is for Estates to drive this requirement and the question must be why if necessary this hasn't happened before now?

I'm sure everyone is aware of the clinical need to have the bed numbers reinstated as we enter the winter period and we are collectively under pressure to achieve this. That's not to say protocol or policy has to be ignored but we can't be perceived to be unnecessarily delaying the process by last minute changes to what was agreed. Can we have a decision on the way forward as a matter of urgency please?

Regards

Steve Russell
Principal Project Manager

[redacted]

From: Conner, Darryl James
Sent: 30 November 2018 18:21
To: Mills, Thomas; Russell, Steve
Cc: Wilson, Andy; Gallacher, Alan; McIntyre, Hazel; Purdon, Colin
Subject: RE: Isolation Rooms - Commissioning Delay

In my opinion this would be an acceptable position to take. We need to move this forward.

Regards,

Alan. G. Gallacher CEng MIMechE, BEng(Hons), DipEM
General Manager (Estates)

Queen Elizabeth University Hospital Campus
Property, Procurement & Facilities Management Directorate
Facilities Corporate Services Dept
CMB Building
Glasgow
G51 4TF

'please note my new telephone number'
[redacted]

Think SAFE ENVIRONMENT.. ....please help cut carbon.....don't print this email unless you really have to.....and remember to recycle.....SAVE ENERGY - THE EASY WAY TO SAVE MONEY!

From: Wilson, Andy
Sent: 04 December 2018 16:38
To: Russell, Steve; Gallacher, Alan; Conner, Darryl James; Powrie, Ian
Cc: McIntyre, Hazel
Subject: RE: Isolation Rooms - Commissioning Delay

Hi,

I understand that Darryl and I had failed to recognise during the previous meeting we had that not having filters fitted while the room is set up as a negative pressure isolation room is against building regulations.

What Darryl proposed in his previous email (returning to previous set-up until the full install work can be completed) was an option to return them without potentially going against building regs.

Another option would be that the new HEPA filters are fitted and the isolation room pressure alarms be disabled. The only reason we didn't want the filters installed was that we knew there was a risk the pressure alarms were likely to go off as soon as the HEPA filters got dirty and restricted air flow.

Ian, do you have any comments on this. Would this also be against building regulations or do you think this would be an acceptable position?

Thanks,
Andy

Andrew S. E. Wilson | CEng MIMechE

I would therefore advise that a Risk assessment should be completed confirming that there has not been and will not be placement of a highly infectious patients in the rooms affected? As the extract duct pre-filter may already have been contaminated and removal of the filter could expose this to atmosphere. With potential to draw this back in to a supply AHU Risk assessment should include confirmation of adjacent supply AHU 's and areas fed from these.

SHTM Para 4.130, also states that:

" Extract filtration will generally only be required where heat-recovery devices are installed. There are a very limited number of specialised applications (microbiological safety cabinets and similar LEV systems) where contaminated air is required to be filtered prior to discharge to atmosphere. If it is safe for staff to work in a room without wearing respiratory protective equipment, it is safe to discharge the room air to atmosphere without filtration."

Regards

Ian

I. Powrie
Deputy General Manager (Estates)

Queen Elizabeth University Hospital Campus
Property, Procurement & Facilities Management Directorate
Facilities Corporate Services Dept
CMB Building
Glasgow
G51 4TF

[redacted]

Think SAFE ENVIRONMENT.. ....please help cut carbon.....don't print this email unless you really have to.....and remember to recycle.....SAVE ENERGY - THE EASY WAY TO SAVE MONEY!

From: Gallacher, Alan
Sent: 04 December 2018 16:53
To: Wilson, Andy; Russell, Steve; Conner, Darryl James; Powrie, Ian
Cc: McIntyre, Hazel
Subject: RE: Isolation Rooms - Commissioning Delay

All,

[redacted]

From: Wilson, Andy
Sent: 05 December 2018 09:58
To: Powrie, Ian; Gallacher, Alan; Russell, Steve; Conner, Darryl James
Cc: McIntyre, Hazel
Subject: RE: Isolation Rooms - Commissioning Delay

Thanks very much for the information Ian.

If I am interpreting this correctly, what you are saying is that if we were not going to re-fit the HEPA filters we would need to either have a signed-off risk assessment showing that this cannot be used for infectious patients or that we would need to carry out a survey (drawings or physical) to confirm there is not risk of short-circuiting airflow to other AHU intakes.

I believe the other option still stands and would be acceptable as described in my previous email; re-instatement of filters with alarms disabled on the understanding this room is only to be used as a general ward room?

Thanks,
Andy

Andrew S. E. Wilson | CEng MIMechE
Sector Estates Manager (South)

andy.wilson2[redacted]
[redacted]

From: Powrie, Ian
Sent: 04 December 2018 18:09
To: Gallacher, Alan [redacted]; Wilson, Andy [redacted]; Russell, Steve [redacted] Conner, Darryl James [redacted]
Cc: McIntyre, Hazel [redacted]
Subject: RE: Isolation Rooms - Commissioning Delay

Andy,

In response to your enquiry and taking into account Alan's view, I would advise that SHTM 03-01 Part A requires section 3.66 requires:

" The discharge from an extract system must be located so that vitiated air cannot be drawn back into the supply air intake or any other fresh-air inlet. Ideally, the extract discharge will be located on a different face of the building from the supply intake(s). In any event, there must be a minimum separation of 4 metres between them, with the discharge mounted at a higher level than the intake"

This is the reason that the HEPA filters where fitted see attached system description for a typical isolation room where HEPA filters are fitted (Note these are only fitted where the above requirement could not be meet by appropriate location of the extract discharge).

Wilson, Andy [redacted]
Powrie Ian (NHS GREATER GLASGOW & CLYDE);
alan.gallache[redacted]
Conner Darryl (NHS GREATER GLASGOW & CLYDE);
Cc:
Mcintyre Hazel (NHS GREATER GLASGOW & CLYDE);
Mills, Thomas [redacted]
This message was sent with high importance.
All,

We would advise that these rooms are available for clinical use at this time under the conditions previously agreed (no HEPA filters installed). There may be some misinterpretation of what the agreement was at the meeting on the 15th November between the clinical teams, Estates and Infection Control that informed this position Due to the urgent need to get beds back into the system, these rooms in the interim would not be used as isolation rooms but regarded as standard single room accommodation. The guidance cited relating to isolation rooms therefore largely becomes irrelevant for this interim arrangement and HEPA filtration would not be required.

The background for removing the filters was based on two main points:

1. The existing plant is not and unlikely to have ever been capable of providing long term isolation room air flow parameters. This is contrary to the information provided within the building's O&M's and original commissioning data.
2. The as fitted installations have no pre-filtration protecting of the HEPAs and there is significant concern the filters would rapidly deteriorate resulting in air flow reductions affecting a negative pressure environment causing regular alarms and necessitating the HEPAs to be replaced frequently. The regularity of this is unknown, however, it is estimated it could possibly be weekly depending on environmental conditions. Additionally, there is no spare capacity within the system to increase the air flow i.e. the fan inverters are already running at their maximum.

On this basis it was agreed the rooms, pending the final ventilation remedial solution, would not be used for patients requiring isolation but would in the interim revert to standard rooms, collectively it was agreed the HEPA filters could be removed mitigating the issues described above and facilitating conventional room use. The air changes within the rooms cannot be guaranteed should these filters be reinserted and we would have no way of knowing when critical levels have been reached if the alarms are disconnected, it would not be our recommendation to adopt this approach as we believe even Building Standards air change rates could potentially be breached under such circumstances.

Infection Control correctly will not sign off on these rooms being used for isolation and that's not the intent here, but Teresa Inkster has accepted their use for patients who do not have airborne infection or immunosuppression. **In light of this can we have confirmation of the previous instruction and resultant additional delay that will be imposed by re-installing these filters which will also necessitate a further re-commissioning of the room ventilation systems?**

Regards

Steve Russell
Principal Project Manager

Fw: Isolation room verification reports

INKSTER, Teresa (NHS GREATER GLASGOW & CLYDE)

Mon 26/08/2019 15:47

To:Conner Darryl (NHS GREATER GLASGOW & CLYDE) [redacted]

Cc:Peters Christine (NHS GREATER GLASGOW & CLYDE) [redacted]

1 attachment

2016-06-29 QEUH isolation rooms report d0 05 (8).pdf;

Darryl - one of the outstanding actions from the ventilation group is in relation to PPVL rooms - see below.

I am trying to put a guide together for RHC as to which rooms can be used for which patient groups. We still cannot confidently state what our PPVLs can be safely used for, particulary those in a critical care setting with no en-suites. I had also suggested we invite Prof Noakes to come and do some testing with labelled CO2 to inform us as to whats happening in these rooms,

Kind regards
Teresa

Dr Teresa Inkster
Lead Infection Control Doctor NHSGGC
National Training Programme Director Medical Microbiology
Dept of Microbiology
Queen Elizabeth University Hospital
Glasgow
[redacted]

From: INKSTER, Teresa (NHS GREATER GLASGOW & CLYDE)
Sent: 28 May 2019 10:10
To: Conner Darryl (NHS GREATER GLASGOW & CLYDE)
Cc: Steele, Tom; alan.gallache[redacted] Purdon Colin (NHS GREATER GLASGOW & CLYDE)
Subject: Re: Isolation room verification reports

Thanks Darryl

There were a few of the rooms I had concerns about, this was just the example I picked. It would be useful to spend time at the meeting going over them all. I only have reports for RHC. Is it possible to get reports for the QEUH rooms as well?

Whilst we now have negative pressure rooms for infectious patients we are still using these PPVLs for immunosuppressed patients for which there was an exclusion in the guidance . Cracks in the

fabric and holes can be an issue depending on the extent as the premise for these rooms is that they are sealed.

It would also be useful to discuss how many of the remainder were built with modifications on the orginal design and whether there is anything we can do about that. I note a latent defect in this particular report.

I have attached the HFS report into these rooms for discussion on Friday

It would also be useful for this group to review the other specialist ventilated areas such as interventional radiology, endoscopy, pacemaker rooms etc.

Ian Powrie had drafted an annual verification SOP, it would be useful to look at that also

Thanks
Teresa

Dr Teresa Inkster
Lead Infection Control Doctor NHSGGC
Training Programme Director Medical Microbiology
Dept of Microbiology
Queen Elizabeth University Hospital
Glasgow
[redacted]

From: Conner, Darryl James [redacted]
Sent: 23 May 2019 18:28
To: INKSTER, Teresa (NHS GREATER GLASGOW & CLYDE)
Cc: Steele, Tom; alan.gallache[redacted].uk; Purdon Colin (NHS GREATER GLASGOW & CLYDE)
Subject: Isolation room verification reports

Hi Teresa,

Tom has asked me to contact you regarding your concerns for a particular isolation room verification report :

RHC Ward 2C - Isolation Room 5

The report itself shows the facility in a poor condition, I believe the obvious questions are:

1. Why has the room been signed off and handed back for use?
2. Is the particular patient group occupying the space at risk based on the reports poor rating of the suites condition?

To explain why the facility is fit for purpose and does meet the requirements of the SHTM04 Sup 1, the individual components of the report must be assessed and risk assessed against the current guidance which reads as follows:

Section 2 – Definition of terms
Assessment of compliance with SHPN 04 Supplement 1

Poor
Air volumes and hence air-change rate is less than 75% of the design. Room pressure differentials do not ensure a
flow from clean to less clean areas; supply or extract air diffusers are not clean; pressure stabilisers not clean and/or
not operating correctly; visible faults in the fabric of the suite; doors unable to close completely; general air of neglect.
Action: Urgent management action required.

Average
Air volumes and room pressure differentials approximate to the original design values; supply air diffusers clean but
extracts visibly fouled; most pressure stabilisers clean and operating correctly; minor faults in the fabric and décor of
the suite.
Action: Maintenance action required.

Good
Better than average.
Action: None.
Maintenance quality

Poor
More than three answers are negative.
Action: Management action required by estates/facilities department.

Average
No more than three answers are negative
Action: Maintenance action required.

Good
No answers are negative.
Action: None.

The report for this room shows a non-favourable poor grading due to " More than three answers are negative" and **not** because "Air volumes and hence air-change rate is less than 75% of the design and that Room pressure differentials do not ensure a
flow from clean to less clean areas"

This can be viewed in the adjacent abstract from the attached verification report:

Item 11 is a latent defect from building handover so automatically compromises the suites ability to achieve a good rating.
The ACH rates in two instances actually exceed design (values 14.8 & 10.6) and in the other instance for the lobby is well within 75% of design (61.9) as shown adjacent :

The other factor that caused the rating to be poor on the report was the lobby pressure being out of spec at 16pa for room 5, this was caused by the adjacent suite undergoing its negative pressure conversion (Room 6), during that period and then being returned back to PPVL when the space was not achieving design in its negative state, the outputs for these rooms where crossed over thus giving the false reading, this is now being addressed to reflect the true difference between both facility's. As a result of this and the completion of these works I expect the next verification of this space to be much more favourable as the items pulling the grading down will have been addressed.

To summarise the fundamental requirements of a PPVL room were achieved, that being 10 ACHs or more and the correct pressure cascade established to ensure patient protection for PPVL application. The report rating shows the facility in a black and white manner and is scored as per the current guidance. I believe These reports can be improved and more detailed, there for as an initiative I have now implemented the change of specialised contractor conducting these verifications on our behalf with a clear remit to address all concerns regarding these important facility's, this will contribute to faster report completion time and remedial work turn around based on any advisories stated within the report, and overall more detailed finalised reports improving our understanding of the condition of our assets.

Hopefully I have been able to highlight the interpretation of these isolation room verification reports and the classification they can be given due to the high standards that they are validated and subsequently annually verified to. These are all topics that we can discuss at our newly established Isolation room steering group (Invites out tomorrow for 31/05/2019) in the interim I am happy to assist and discuss any and all questions you may have regarding the subject.

Best

Regards

Darryl

Darryl James Conner MIHEEM
Interim Site Manager Operational Estates (SMOE)
Queen Elizabeth University Hospital Campus,
Labs Bldg.
1345 Govan Rd
Glasgow
G51 4TF

[redacted]

MEETING TO DISCUSS BMT UNIT RHC
Monday 7 September 4.45pm to 6:15PM
Held in Dr Alan Mathers Office Ground Floor RHC

In Attendance	Apologies
Dr Jennifer Armstrong (Chair) - JA Dr Alan Mathers - AM Mr Billy Hunter - BH Mr Jamie Redfern - JR Mr Grant Archibald (by telephone) - GA Prof. Brenda Gibson - BG Prof. Craig Williams – CW Mr. David Brattey - DW	Mr. David Loudon - DL

1.Purpose of the meeting:

This meeting was brought together to identify the progress made in resolving the Bone Marrow Transplant (BMT) room estates issues in RHC and determine position for the paediatric haematology oncology service in being able to start new cases. JA acknowledged the clinical frustration about progress and the need to plan for patients currently waiting transplant. Group were reminded that the two rooms / suites currently under scrutiny were 18 and 19. There are a further 6 rooms / suites which over time should reach the level of BMT specification / performance required. These are room / suites 17, 20, 22, 23, 24 and 25.

2. Agenda

The meeting was informed by the Agenda set earlier and circulated by JA and a stepwise debate took place around:

1. Previous situation at the old RHSC / Yorkhill unit for baseline (CW/DL/ BH)
2. Current position of the new unit in terms of build and recent sealing etc (CW/DL)
3. Further proposed work (BH/ DL)
4. Position of patients (BG)
5. Risk assessment (all)
6. Agreed way forward and conclusion. ALL

3. RHSC and RHC transplant rooms / suites specifications and Performance	BH/ DL were tasked with
1. BH described the former BMT unit rooms within RHSC, it was noted that the suite configuration was consistent with the 18 / 19 rooms / suites within Ward 2A of the RHC: i.e. lobby/in-patient room and en-suite. 2. Air pressure within the former RHSC BMT suites achieved 10 pascals of positive pressure and this was provided by an air handing unit - input within the lobby and patient room, with extract located within the en-suite. 3. The air handing units within the suites of the new RHC provide air input within the lobby and there is extract within	1. Formally writing up a summary document which compared old RHSC and current RHC unit in terms of specification and performance. The purpose of this was to provide formal audit trail that the new arrangements for transplanting children in current RHC were as good if not better than the previous arrangements in old RHSC / Yorkhill. This document also needed to formally confirm that the specification in RHC was built to all appropriate building note regulations and clearly reference these. The document needed to confirm that there was no technical / engineering

the patient room and ensuite. This is available in all 8 rooms / suites. 4. Air pressure monitoring of the new RHC BMT rooms /suites 18 and 19 has taken place four times per day since Wednesday 2nd September and reading consistently measure 9.5/10 pascals. Readings have been taken at six hourly intervals by Estates staff (i.e. 03:00/09:00/15:00/21:00) 5. BH confirmed that the two BMT suites (RHC) have been sealed (which should safely last one year) to avoid air penetration from a source outwith the air handling unit. 6. Recent air permeability testing took place week commencing 31st August 2015 and satisfactory results. This process was undertaken by Lead Consultant Microbiologist/Brookfield colleagues & Estates Management. 7. BH indicated that from an engineering perspective, the BMT suite conditions within the new RHC provided no lesser standard by comparison to the former RHSC transplant suites. 8. BH confirmed that Brookfield could retro fit air handling unit modifications to the 8 BMT room / suites (in accordance with the design parameters of Leeds) at an approx cost of £35k per room - (excluding VAT). Timeline for the completion of one BMT suite is estimated to take 4 – 6 weeks and depending upon access, two suites could be done at the same time. The group agreed to explore this option in more detail. 9. BH confirmed that he saw no technical/ engineering risk to providing transplants in the identified rooms / suites 18 and 19 based on comparison to RHSC and recent test results of RHC rooms /suites. Also noting specifications met all relevant building note regulations.	risk to transplanting in rooms 18 and 19 based on test results to date and comparison specification to old RHSC. **BH Response** . RHSC BMT Suites were designed to meet SHTM 03-01 Verification for Healthcare Premises. . Air pressure achieved 10 pascals. . BMT Suite design features a) lobby, b) patient room & c) en-suite facility. . Lobby & patient room had positive pressure & en-suite had negative pressure. RHC BMT Suites are designed to meet SHTM 03-01 which was the design brief stipulated by NHSGGC. . Air pressure achieves 10 pascals within suites 18 & 19. . The lobby has positive pressure. . The patient room has neutral pressure. . The en-suite has negative pressure - Air permeability testing undertaken on Friday 21st August 2015 (Bed 18) and Wednesday 26th August 2015 (Bed 19) by Risk Environmental Ltd on behalf of Brookfield Multiplex Europe achieved acceptable levels of air permeability and comply with the reqired criteria laid down in HBN04 Supplement 1. - The environmental conditions of RHSC & RHC are comparable and there are no indicators to suggest that the BMT suites within RHC pose any clinical risk from an engineering

	perspective, based on the present situation at this point in time. 2. Circulating the air pressure results for new RHC. These pressure tests should continue with an agreed forward reporting mechanism in place and described by estates. Process for escalation identifying any problems with the test results and impact on room performance to 10 pascals should be described and implemented. **BH Response** Air Pressure Testing is currently being undertaken by Estates Operatives 4 times per day (03:00 / 09:00 / 15:00 / 21:00). All results demonstrate satisfactory outcomes (10 pascals). In the event of lower level readings being noted Estates Operatives will investigate the problem and liaise with nurse colleagues. BMT suite pressure monitoring will be reviewed and linked to the Building Management System (BMS) which will automatically monitor air pressure levels within BMT suites. In the event that air pressure falls outwith an acceptable tolerance (to be agreed) the BMS will alarm and Estates staff will respond. A protocol will be developed week commencing 14TH September 2015 to identify response arrangements. 3. Liaising with Brookfield colleagues to seal two further rooms/ suites. In doing this the aim was to meet the same standard of air permeability within the two BMT suites currently fully sealed. Further to this there

	should be further work undertaken to fully seal the remaining 4 BMT rooms/ suites. On completion of this work plan service would have an incremental uplift of 2 – 4 – 8 fully performing BMT suites over an agreed project time. Project plan for taking this work forward to be drafted between service, estates and Brookfield. Noted that completion of this work plan will be linked to ongoing clinical activity and use of cubicles **BH Response** Brookfield and clinical colleagues have agreed a programme of access to allow the remainder of suites within 2A to be sealed in accordance with the two BMT suites, to achieve satisfactory levels of air permeability. Please find attached programme which has been agreed (Appendix 3) 4. Liaising with Brookfield around a work plan which would on completion provide service with at least 2 rooms which matched specification used in Leeds. In taking this work plan forward there needed to be clarity on any impact it would have on clinical services within the unit. **BH Response** Brookfield have confirmed that further retrospective modifications to the air handing units within two BMT suites could be undertaken at an agreed time. The cost of these works will total £35k (excluding VAT) per suite. The programme of work will take six to eight weeks (per suite), however it is feasible to work on two suits at the same time if this is clinically acceptable.
Cleaning in ward area: 1. Due to the high level of pedestrian	BH was tasked with 1. Implementing the proposed changes

activity in Ward 2A corridor, and as part of risk mitigation, it was agreed that increased cleaning of the wards circulation areas would take immediate effect and with a chlorine based solution.	to cleaning for BMT cubicles and corridor in the unit as described. A standing operating procedure for domestic services should be in place with robust reporting lines regarding daily compliance. This should be implemented with immediate effect. BH Response Revised cleaning SOP has been agreed between Facilities, Lead ICN and Lead Nurse. This has resulted in higher frequency of cleaning tasks be undertaken and the use of hypochlorite cleaning solution. Once the updated SOP is complete, this will be shared colleagues. It is anticipated that the revised SOP will be available Friday 11th Sept. Increased cleaning frequencies are fully in place.
Microbiology 1.CW updated on recent microbiology testing in rooms / cubicles 18 and 19. He confirmed that testing from 31st August showed 1 colony growing at 22C in the ensuite, further sealing has been undertaken in Rm 19 since the testing and sampling repeated on 4th September. After 3 days incubation Room 18 - ensuite at 30 degrees incubation - 1 colony - main at 22 degrees incubation - 1 colony Room 19 - ensuite at 22 degrees incubation - 2 colonies - main at 30 degrees incubation - 1 colony	CW was tasked with 1. Providing the outcome of sampled testing when results became available between Wednesday 9th and Friday 11th September and clarifying implication of results re performance of rooms / suites 18 and 19 suitability to begin transplanting.
Clinical Services 1. BG confirmed that there was a standard operating procedure in place and used by staff for when BMT cubicles were in use 2. BG noted there were 3 patients awaiting transplant. 3. BG confirmed patient1 from Aberdeen (acute relapse) was described as urgent and needed to start treatment	Clinical team were tasked with providing 1. Providing a copy of the standard operating procedure used by nurses and other clinical / support staff when BMT room/ cubicle in use 2. Provisional transplant start times for patient 3 and patient 2. This work would be carried out in conjunction with ongoing estate work and clinical

within circa 2 weeks. BG confirmed it was not clinically possible to transfer patient 1 to another unit for transplant noting capacity issues, waiting lists and clinical work up etc. 4. BG confirmed that patient 2 (Thalassaemia) was not clinically urgent. However this patient had experienced a cancelled transplant date previously because of room / suite difficulties. Parents of this child were anxious that the transplant was completed as soon as possible. 5. BG updated on patient 3 who had received news recently of a suitable donor and was also now classed as clinically urgent with a start date for treatment required within the next 4 weeks 6. All agreed that patient 1 should be transplanted immediately subject to pending microbiology test results being satisfactory. Subject to estate work (sealing of additional rooms / cubicles) being carried out timeously and any further ongoing microbiology testing plans should also be set for patients 2 and 3 to be transplanted over next few weeks.	timelines. 3. A standard operating procedure for transfer of any transplant patient between cubicles if problems with a sealed room/ other microbiology results emerge which cause concern. CW would also have to be involved in draft and implementation of this SOP.
Conclusions 1. On completion of the relevant engineering / microbiology documentation there is a need for 3 way Directorate sign off for patient 1 to be transplanted within the next 2 weeks.	1. Three way Directorate agreement sign of being JA, DL and GA.

Draft V2 2015-09-09
Jamie Redfern General Manager HPN/ Acting Director W&Cs

Lang, Ann

From: Redfern, Jamie
Sent: 31 August 2015 12:32
To: Loudon, David
Cc: Brattey, David; Walsh, Tom; Williams, Craig
Subject: Re: SCHIEHALLION WARD - BMT SUITE

I'm sure Brenda will be able to provide the clinical input.
If some lays down the key tasks to be progressed I'm happy to try and make sure they happen.

Sent from my Samsung device

-------- Original message --------
From: "Loudon, David" [redacted]
Date: 31/08/2015 11:57 AM (GMT+00:00)
To: "Redfern, Jamie" <[redacted]
Cc: "Brattey, David" <[redacted], "Walsh, Tom" [redacted]uk>, "Williams, Craig" <[redacted]
Subject: Re: SCHIEHALLION WARD - BMT SUITE

Jamie

Per Peters message, who will provide the clinical brief to enable the design engineer to progress?

David

David W Loudon MCIOB CBIFM MBA
Director of Facilities and Capital Planning
NSH Greater Glasgow & Clyde

On 31 Aug 2015, at 11:40, Redfern, Jamie [redacted] wrote:

> Hi David
>
> In IP's absence is this something you can pick up
> As noted there is a significant degree of urgency in this matter
> Happy to discuss if helpful
>
> Jamie
>
> **From:** Williams, Craig
> **Sent:** 31 August 2015 11:04
> **To:** Redfern, Jamie
> **Cc:** Loudon, David; Walsh, Tom
> **Subject:** FW: SCHIEHALLION WARD - BMT SUITE
>
> Dear Jamie
>
> Ian Powrie is now on annual leave so I'm not sure who or how the board will guide the design engineer. Ian has been in touch with Leeds and his view is that the change in the pressure regime he outlined is broadly how Leeds operate so it would be desirable for us to move to this as quickly as possible

I sthis something that you can take forward

Best wishes

Craig

From: Moir, Peter
Sent: 25 August 2015 15:04
To: Powrie, Ian; Williams, Craig; McNamee, Sandra
Cc: Loudon, David
Subject: RE: SCHIEHALLION WARD - BMT SUITE

All

Under Stage two a design engineer will need to be given guidance by the Board on the pressure regime for the suite at present the set up broadly replicates those in table 1 of SHPN 04 for isolation suites, who will provide this information?

P

From: Powrie, Ian
Sent: 25 August 2015 13:34
To: Moir, Peter; Williams, Craig; McNamee, Sandra
Cc: Loudon, David
Subject: RE: SCHIEHALLION WARD - BMT SUITE

Peter,

Craig and I have reviewed our combined comments are highlighted in red below.

Regards

Ian

From: Moir, Peter
Sent: 25 August 2015 10:55
To: Williams, Craig; Powrie, Ian; McNamee, Sandra
Cc: Loudon, David
Subject: SCHIEHALLION WARD - BMT SUITE

All

This is not a meeting note but a draft response to Grant's questions based on our discussion yesterday. Please read through and confirm you are in accord with what is written or suggests amendments. Note I need a date in item 4 when test results would be available I believe we discussed 5 days but not sure. I intend passing to David Loudon early afternoon.

QUESTIONS

1.0 An opinion regarding the suitability of the facilities in their current configuration

The eight isolation suites in Schiehallion Ward have been designed and constructed to meet the

– Scottish Health Planning Note 04 (SHPN-04) In-patient Accommodation Supplement 1: Isolation Facilities in Acute Settings is confirmed as the correct document for this type of ward.

SHPN 04 also makes reference under 1.10 of an exclusion for specialist facilities where severely immune-compromised patients are nursed. The document notes that guidance for these facilities will follow in a further supplement to SHPN 04 although no such guidance has been issued.

Guidance from Health Protection Scotland for this type of treatment also makes reference to SHPN 04 Supp. 1 and the use of source and protective isolation through a pressurised lobby as being the preferred solution.

3.0 Identification of what other actions ICT/Estates require to be conducted to make the rooms operational.

ICT/Estates recommend a two stage approach.

Stage One – Bring Two Rooms into Operation (Rooms 18 and 19)
The rooms within the eight isolation suites require to be correctly sealed and certified by specialist contractors, to ensure there is no scope for ingress of particulates into the main patient bedroom and en-suite facilities. The rooms then require to be formally completed and certify the testing schedule outlined in SHPN 04 appendix 2 to ensure that

a. air infiltration/leakage
b. differential pressures
c. HEPA Challenge tests (DOP)

are within the tolerances set out in the document. These tests will be undertaken by a third party company specialising in this type of testing and a formal report with results will require to be submitted to the Board for review. On successful completion of the air permeability test, the room will then be made available to the Board's Facilities team to undertake smoke testing, deep clean and on completion microbiological tests will be undertaken and results obtained before the room is brought into use.

Stage Two – To All Rooms on a Phased Basis (when available)

In addition to the actions in Stage One for the remaining six rooms, ICT/Estates believe that it would be beneficial to rebalance the existing ventilation in the suite to increase the air pressures within the patient bedroom and en-suite WC/SH, in relation to the main ward corridor and external air. This would further mitigate the risk to the patient from any potential breach that may occur to the suite seals during operation. The eight suites each have their own supply and extract ventilation system and it is believed that pressures could be positively increased in the suite by altering the existing dampers and installing a transfer grille in the door to the en-suite.

All of these recommendations remain within the scope of SHPN 04.

If this course of action were to be followed, the ventilation design engineer would be required to specify the new pressure regime to meet these aims and revalidated the design parameters within the scope of the existing guidance SHPN 04, prior to engineers making adaptations and re-commissioning of the air handling equipment and this work would be additional to Brookfield's current contract.

2.0 An Infection Control opinion identifying if the rooms can now be used.

Rooms can be brought into operation provided they meet the following requirements:

a) Formal certification of the testing schedule outlined in SHPN 04 appendix 2 .
b) microbiological testing:
    1. Meet particulate requirements and
    2. An absences of fungal spores

test undertaken by NHS staff.

4.0 The timescales for effecting item 3 if it applies.

Room 18 has passed the air leakage test and achieved the differential differentials set out in SHPN 04 Supp 1. Room 19 was sealed on 24th August and will undergo an air permeability test on 26th August. On assumption that both rooms are passed and report provided by the test engineer on 26th August the rooms will then be available for NHS Facilities to undertake a deep clean of both rooms. The rooms could then undergo microbiological tests on Friday 28th August and results should be available by 4th September 2015. Smoke testing will be performed between the 28th Aug & 2nd Sept with the final clinical clean carried out on the 3rd Sept.

Regards

Peter Moir
Deputy Project Director

South Glasgow Hospitals Project Office
NHS Greater Glasgow & Clyde
Room L1/25
Management Building
1345 Govan Road
Glasgow G51 4TF

[redacted]

ang, Ann

From: Redfern, Jamie
Sent: 31 August 2015 11:40
To: Brattey, David
Cc: Loudon, David; Walsh, Tom; Williams, Craig
Subject: RE: SCHIEHALLION WARD - BMT SUITE

Hi David

In IP's absence is this something you can pick up
As noted there is a significant degree of urgency in this matter
Happy to discuss if helpful

Jamie

From: Williams, Craig
Sent: 31 August 2015 11:04
To: Redfern, Jamie
Cc: Loudon, David; Walsh, Tom
Subject: FW: SCHIEHALLION WARD - BMT SUITE

Dear Jamie

Ian Powrie is now on annual leave so I'm not sure who or how the board will guide the design engineer. Ian has been in touch with Leeds and his view is that the change in the pressure regime he outlined is broadly how Leeds operate so it would be desirable for us to move to this as quickly as possible.

Is this something that you can take forward

Best wishes

Craig

From: Moir, Peter
Sent: 25 August 2015 15:04
To: Powrie, Ian; Williams, Craig; McNamee, Sandra
Cc: Loudon, David
Subject: RE: SCHIEHALLION WARD - BMT SUITE

Al

Under Stage two a design engineer will need to be given guidance by the Board on the pressure regime for the suite at present the set up broadly replicates those in table 1 of SHPN 04 for isolation suites, who will provide this information?

P

From: Powrie, Ian
Sent: 25 August 2015 13:34
To: Moir, Peter; Williams, Craig; McNamee, Sandra
Cc: Loudon, David
Subject: RE: SCHIEHALLION WARD - BMT SUITE

Lang, Ann

From: Loudon, David
Sent: 26 August 2015 16:51
To: Williams, Craig
Cc: Armstrong, Jennifer; Walsh, Tom; Hunter, William
Subject: RE: Paediatric BMT

Craig

Thanks for your message.

Billy Hunter will make contact with both hospitals tomorrow and update me on their discussion.

Regards

David

David W. Loudon, MCIOB, CBIFM, MBA
Director of Facilities and Capital Planning
NHS Greater Glasgow & Clyde
Management Building
Govan Road
Glasgow
G51 4SX

Direct Line: [redacted]
M [redacted]

From: Williams, Craig
Sent: 26 August 2015 10:51
To: Loudon, David
Cc: Armstrong, Jennifer; Walsh, Tom
Subject: Paediatric BMT

Dear David

As part of the work we are doing around the paediatric BMT we were asked to identify other units using positive pressure lobbied side rooms. There were a number of these across the UK but at the last meeting Leeds and Sheffield were identified as the most appropriate comparators. I have contacted the microbiologists on these sites but it was also agreed that we would look at the engineering parameters in use on these sites. Ian Powrie has not been able to get this information and is on leave from tomorrow.Would you be able to take this forward?

Best wishes

Craig

Professor Craig Williams
Consultant Microbiologist RHSC Glasgow
Lead ICD NHSGGC
Professor of HAI UWS

[redacted]

Lang, Ann

From: Powrie, Ian
Sent: 28 August 2015 11:45
To: Williams, Craig
Cc: Redfern, Jamie; McNamee, Sandra; Walsh, Tom; Gibson, Brenda; Hunter, William; Loudon, David
Subject: Re: BMT unit

Hi Craig,

As we discussed I have attempted to contact estates at both Leeds and Sheffield children's hospitals, unfortunately I have not managed to make contact with anyone at Sheffield despite several attempts.

Leeds Children's Hospital, BMTU is 4 years old, and is a retro fit development within a 40 year old building.

They have four isolation suites with the design based on HBN 04-01 supplement 1, all four suites are supplied from a single AHU with stand by AHU resilience, complete with H13 HEPA filtration within the AHU, there are no terminal HEPA's installed in the suite.

The facility is lobbied with a en-suite anti-room, The supply air is provided via the lobby which sits at a 8-12pa differential pressure to the corridor, with a pressure balanced transfer grille from the lobby to the isolated bed room. The lobby door and room door are interlocked to activate a local alarm should ether door be left open.

The bed room is at a differential pressure of 20-25pa to the en-suite, where the extract is 152 ltrs/s split 60% from the en-suite and 40% from the bed room, there are no transfer grilles between the bed room and the en-suite.

Feel free to give me a call today if you would like to discuss.

Regards

Ian

I Powrie
Sector Estates Manager (NSGH)
Project Team, New South Glasgow Hospitals,
Southern General Hospitals Construction Site,
2nd Floor, Modular Building, Off Hardgate Road, Glasgow,G51 4SX
[redacted]

On 18 Aug 2015, at 15:16, Williams, Craig <Craig.Williams@[redacted] wrote:

> Dear Jamie
>
> I've done a quick phone around of Microbiology Consultants taken from the list of Paediatric transplant centres listed on the BSBMT registry. Our build is in line with all of the other paediatric centres that I have been able to contact so far. There is a lot of variability in how the ongoing testing of the rooms is done which will be useful to discuss further. I will try and get hold of more centres prior to the meeting. Not sure if this tallies with Prof Gibsons findings
>
> Best wishes

FW: Urgent/Important - Schiehallion testing

Joannidis, Pamela [redacted]

Sent: 02 July 2015 08:50

To: Inkster Teresa (NHS GREATER GLASGOW & CLYDE - SGA20); Powrie Ian (NHS GREATER GLASGOW & CLYDE - SGA20); Ewins, Anna-Maria [redacted]; Barmanroy, Jackie [redacted] Kirkwood Jean (NHS GREATER GLASGOW & CLYDE - SGA20); MacKinnon, Yvonne [redacted] Mcauley Mary (NHS GREATER GLASGOW & CLYDE - SGA20)

Cc: Williams Craig (NHS GREATER GLASGOW & CLYDE - SGA20); Walsh Thomas (NHS GREATER GLASGOW & CLYDE - SGA20); Mcnamee Sandra (NHS GREATER GLASGOW & CLYDE - SGA20)

Dear all
Can we all meet up in Schiehallion ward today at 2pm to discuss the progress re BMT provision in Schiehallion.
Kind regards

Pamela

From: Kirkwood, Jean
Sent: 02 July 2015 08:40
To: Joannidis, Pamela
Subject: RE: Urgent/Important - Schiehallion testing

yes

From: Joannidis, Pamela
Sent: 02 July 2015 08:33
To: Kirkwood, Jean; Leighton, Sheenagh; McVeigh, Alanna; Inkster, Teresa (NHSmail); Barmanroy, Jackie
Cc: Williams, Craig; MacKinnon, Yvonne; Gibson, Brenda; Ewins, Anna-Maria; Robertson, Lynne; McAuley, Mary; Powrie, Ian; Lavery, Brian
Subject: RE: Urgent/Important - Schiehallion testing

Thanks Jean
Can we meet in the ward?
Pamela

From: Kirkwood, Jean
Sent: 02 July 2015 08:32
To: Joannidis, Pamela; Leighton, Sheenagh; McVeigh, Alanna; Inkster, Teresa (NHSmail); Barmanroy, Jackie
Cc: Williams, Craig; MacKinnon, Yvonne; Gibson, Brenda; Ewins, Anna-Maria; Robertson, Lynne; McAuley, Mary; Powrie, Ian; Lavery, Brian
Subject: RE: Urgent/Important - Schiehallion testing

Free at 2pm - 2.30.
many thanks
Jean

From: Joannidis, Pamela
Sent: 01 July 2015 23:12

A49618520

To: Leighton, Sheenagh; McVeigh, Alanna; Kirkwood, Jean; Inkster, Teresa (NHSmail); Barmanroy, Jackie
Cc: Williams, Craig; MacKinnon, Yvonne; Gibson, Brenda; Ewins, Anna-Maria; Robertson, Lynne; McAuley, Mary; Powrie, Ian; Lavery, Brian
Subject: RE: Urgent/Important - Schiehallion testing

Hi Jean
We (ICD Dr Inkster, Jackie and myself) spoke to eve this evening. I agree it would be useful to meet tomorrow. Are you free anytime after 2pm? Ian , Teresa, can you also make this?
Pamela

From: Leighton, Sheenagh
Sent: 01 July 2015 18:53
To: McVeigh, Alanna; Kirkwood, Jean; Lavery, Brian
Cc: Williams, Craig; Joannidis, Pamela; MacKinnon, Yvonne; Gibson, Brenda; Ewins, Anna-Maria; Robertson, Lynne; McAuley, Mary; Powrie, Ian
Subject: RE: Urgent/Important - Schiehallion testing

Hi Alanna,

I would like to take advice on wall washing. The domestic staff will not wash the full length of a walls or windows. They are only required to remove marks from walls.

I assume this child would be in strict isolation, I would like clarification if second clean is required as it is my understanding that entry to room is limited.

Happy to discuss. I agree we need to give clear guidelines to all staff concerned

Sheenagh

From: McVeigh, Alanna
Sent: 01 July 2015 15:58
To: Kirkwood, Jean; Lavery, Brian
Cc: Williams, Craig; Joannidis, Pamela; MacKinnon, Yvonne; Gibson, Brenda; Ewins, Anna-Maria; Robertson, Lynne; McAuley, Mary; Powrie, Ian; Leighton, Sheenagh
Subject: Urgent/Important - Schiehallion testing

Dear All

Please see attached 3 SOPs that I have been trying to get agreed (via email) since we moved - which are all relevant to the email below. I stop for leave on Friday for one week and would be really grateful if we could get these completed before I stop as we need clear guidance for staff and confident that everything is in place for the patient being isolated for transplant.

Best wishes.

Alanna

From: Kirkwood, Jean
Sent: 01 July 2015 15:41

RE: Urgent/Important - Schiehallion testing

Inkster Teresa (NHS GREATER GLASGOW & CLYDE - SGA20)

Sent: 03 July 2015 11:15

To: Joannidis, Pamela [redacted] Walsh Thomas (NHS Greater Glasgow & Clyde)

Cc: Robertson Lynne (NHS GREATER GLASGOW & CLYDE - SGA20); Mcauley Mary (NHS GREATER GLASGOW & CLYDE - SGA20); Kirkwood Jean (NHS GREATER GLASGOW & CLYDE - SGA20); Leighton Sheenagh (NHS GREATER GLASGOW & CLYDE - SGA20); Barmanroy, Jackie [redacted] Mcveigh Alanna (NHS GREATER GLASGOW & CLYDE - SGA20); Ewins, Anna-Maria [redacted]

Follwing sealing of the light fittings and cleaning repeat particle counts this morning are

Room 17 - 515
Room 18 - 1587

I have discussed these results with Jean . The transplant patient should be nursed in Room 17 . Air sampling results for fungi will be available in 5-7 days .

Kind Regards
Teresa

Dr Teresa Inkster
Consultant Microbiologist and Infection Control Doctor
Dept of Microbiology
Lister Building
Glasgow Royal Infirmary
[redacted]

From: Joannidis, Pamela [redacted]
Sent: 03 July 2015 09:42
To: Inkster Teresa (NHS GREATER GLASGOW & CLYDE - SGA20)
Cc: Robertson Lynne (NHS GREATER GLASGOW & CLYDE - SGA20); Mcauley Mary (NHS GREATER GLASGOW & CLYDE - SGA20); Kirkwood Jean (NHS GREATER GLASGOW & CLYDE - SGA20); Leighton Sheenagh (NHS GREATER GLASGOW & CLYDE - SGA20); Barmanroy, Jackie; Mcveigh Alanna (NHS GREATER GLASGOW & CLYDE - SGA20); Ewins, Anna-Maria
Subject: RE: Urgent/Important - Schiehallion testing

Hi Teresa
This is really useful thanks.
The new Schiehallion has 8 rooms that are spec'd to BMT level with ante rooms and magnhelix gauges. Of these rooms 18 and 17 had the light fittings sealed yesterday and a deep clean has been carried out. Sampling has just taken place as agreed.
Pamela

-----Original Message-----
From: Inkster Teresa (NHS GREATER GLASGOW & CLYDE - SGA20) [redacted]
Sent: 02 July 2015 19:04
To: Leighton, Sheenagh; Joannidis, Pamela; Kirkwood, Jean; McVeigh, Alanna; Barmanroy, Jackie
Cc: Williams, Craig; MacKinnon, Yvonne; Gibson, Brenda; Ewins, Anna-Maria; Robertson, Lynne; McAuley, Mary; Powrie, Ian; Coyne, Patricia
Subject: RE: Urgent/Important - Schiehallion testing

Thanks Sheenagh

I thought it would be useful to summarise the discussions at our meeting this afternoon which was held in response to the queries in the email below from Alanna yesterday.

1) Air sampling has been centralised at the GRI microbiology lab so reports will be issued in this format - the info

contained in the reports will include particle counts, air sampling results and comments in relation to people in the vicinity of the testing and/or cleaning in progress at the time . This info will aid with interpretation.

2+3)Ideally particle counts should be < 1000 at 0.5um. What type of patient is in the room is irrelevant as all these rooms should meet the spec for a BMT unit. We should not expect to see any fungus on the plates from these rooms. Elevated particle counts +/- fungal growth requires a risk assessment on each occasion by infection control. This should include checking for water ingress and that engineering parameters are satisfactory. Infection control will advise whether these rooms need to be closed.

4+5) It would be useful for the GRI lab to have a schedule for air sampling in 2A and I will follow this up with Prof Williams on his return. I expect this will involve monthly sampling on a rotational basis. Currently as we have identified issues on the unit we are testing at an increased frequency and will continue to do so until we are satisfied with the air quality.

6) It would be useful to have names of individuals we should send reports to in addition to the ICD , lead ICN and estates officer for the site. For adult BMT we send reports to Robert Boyd, Quality Manager.

In relation to the final point re placement of a transplant patient, it was decided in a meeting with Prof Williams and clinicians last week to proceed with a transplant case and to place that child in the safest room . As I explained in the meeting I cannot presently state that one room is safer than another based on particle counts and air sampling results . Particle counts and air sampling have been performed on 4 consecutive occasions since 9/6/15. Each time, counts have been elevated throughout the unit and we have had fungus including Aspergillus growing on plates from certain rooms and the corridors. As I explained air sampling takes place for just a few minutes and as a result we will miss bursts of fungal spores. In addition I have yet to see any validation reports for the ventilation system or Legionella sampling results for 2A.

I was made aware by Ian Powrie on 25/7 that there is an issue with light fittings in the rooms. On inspection by myself and Pamela it was evident that the light fittings are not sealed and there is direct communication with the void above with visible dust on these fittings. This may explain the elevated particle counts/fungal growth. So, although we have lobbied rooms and HEPA filtration we have holes in the ceiling and therefore an unsealed room which does not meet the spec for a BMT patient .

Following discussion with Ian Powrie sealed light fittings will be fitted today in Rooms 17 and 18 - this was in progress when I visited the unit this afternoon. Cleaning will take place tonight and repeat particle counts and air sampling will take place tomorrow morning . As discussed there is a clinical need for a childs transplant to go ahead and therefore they will be admitted to either room 17 or room 18 . Prophylactic Ambisome will be administered three times a week and depending on results of sampling may be increased to treatment dose.

Sealed light fittings will be acquired as soon as possible for the rest of the unit. In addition we discussed cleaning the unit with Actichlor plus.

I will discuss tomorrows particle counts with Jean when they become available.

Kind Regards
Teresa

Dr Teresa Inkster
Consultant Microbiologist and Infection Control Doctor Dept of Microbiology Lister Building Glasgow Royal Infirmary Direct dial : [redacted]
From: Leighton, Sheenagh [Sheenagh.Leighton@[redacted]
Sent: 02 July 2015 16:22
To: pamela.joannidis[redacted]; Kirkwood Jean (NHS GREATER GLASGOW & CLYDE - SGA20); Mcveigh Alanna (NHS GREATER GLASGOW & CLYDE - SGA20); Inkster Teresa (NHS GREATER GLASGOW & CLYDE - SGA20); Barmanroy, Jackie
Cc: Williams Craig (NHS GREATER GLASGOW & CLYDE - SGA20); MacKinnon, Yvonne; Gibson, Brenda; Ewins, Anna-Maria; Robertson Lynne (NHS GREATER GLASGOW & CLYDE - SGA20); Mcauley Mary (NHS

GREATER GLASGOW & CLYDE - SGA20); Powrie Ian (NHS GREATER GLASGOW & CLYDE - SGA20); Lavery Brian (NHS GREATER GLASGOW & CLYDE - SGA20); Coyne Patricia (NHS GREATER GLASGOW & CLYDE - SGA20)
Subject: RE: Urgent/Important - Schiehallion testing

Hi Folks,

I have contacted the wall washer and have informed him he requires to use Actichlor to was down the wall.
I will instruct the domestic staff that the must use actichlor for daily clean of surfaces and floors in the strict and the transplant rooms.

Sheenagh

From: Joannidis, Pamela
Sent: 02 July 2015 08:33
To: Kirkwood, Jean; Leighton, Sheenagh; McVeigh, Alanna; Inkster, Teresa (NHSmail); Barmanroy, Jackie
Cc: Williams, Craig; MacKinnon, Yvonne; Gibson, Brenda; Ewins, Anna-Maria; Robertson, Lynne; McAuley, Mary; Powrie, Ian; Lavery, Brian
Subject: RE: Urgent/Important - Schiehallion testing

Thanks Jean
Can we meet in the ward?
Pamela

From: Kirkwood, Jean
Sent: 02 July 2015 08:32
To: Joannidis, Pamela; Leighton, Sheenagh; McVeigh, Alanna; Inkster, Teresa (NHSmail); Barmanroy, Jackie
Cc: Williams, Craig; MacKinnon, Yvonne; Gibson, Brenda; Ewins, Anna-Maria; Robertson, Lynne; McAuley, Mary; Powrie, Ian; Lavery, Brian
Subject: RE: Urgent/Important - Schiehallion testing

Free at 2pm - 2.30.
many thanks
Jean

From: Joannidis, Pamela
Sent: 01 July 2015 23:12
To: Leighton, Sheenagh; McVeigh, Alanna; Kirkwood, Jean; Inkster, Teresa (NHSmail); Barmanroy, Jackie
Cc: Williams, Craig; MacKinnon, Yvonne; Gibson, Brenda; Ewins, Anna-Maria; Robertson, Lynne; McAuley, Mary; Powrie, Ian; Lavery, Brian
Subject: RE: Urgent/Important - Schiehallion testing

Hi Jean
We (ICD Dr Inkster, Jackie and myself) spoke to [redacted] this evening. I agree it would be useful to meet tomorrow. Are you free anytime after 2pm? Ian , Teresa, can you also make this?
Pamela

From: Leighton, Sheenagh
Sent: 01 July 2015 18:53
To: McVeigh, Alanna; Kirkwood, Jean; Lavery, Brian
Cc: Williams, Craig; Joannidis, Pamela; MacKinnon, Yvonne; Gibson, Brenda; Ewins, Anna-Maria; Robertson, Lynne; McAuley, Mary; Powrie, Ian
Subject: RE: Urgent/Important - Schiehallion testing

Hi Alanna,

I would like to take advice on wall washing. The domestic staff will not wash the full length of a walls or windows. They are only required to remove marks from walls.

I assume this child would be in strict isolation, I would like clarification if second clean is required as it is my understanding that entry to room is limited.

Happy to discuss. I agree we need to give clear guidelines to all staff concerned

Sheenagh

From: McVeigh, Alanna
Sent: 01 July 2015 15:58
To: Kirkwood, Jean; Lavery, Brian
Cc: Williams, Craig; Joannidis, Pamela; MacKinnon, Yvonne; Gibson, Brenda; Ewins, Anna-Maria; Robertson, Lynne; McAuley, Mary; Powrie, Ian; Leighton, Sheenagh
Subject: Urgent/Important - Schiehallion testing

Dear All

Please see attached 3 SOPs that I have been trying to get agreed (via email) since we moved - which are all relevant to the email below. I stop for leave on Friday for one week and would be really grateful if we could get these completed before I stop as we need clear guidance for staff and confident that everything is in place for the patient being isolated for transplant.

Best wishes.

Alanna

From: Kirkwood, Jean
Sent: 01 July 2015 15:41
To: McVeigh, Alanna; Lavery, Brian
Cc: Williams, Craig; Joannidis, Pamela; MacKinnon, Yvonne; Gibson, Brenda; Ewins, Anna-Maria; Robertson, Lynne; McAuley, Mary
Subject: RE: Urgent/Important - Schiehallion testing

Hi there,
As SCN within Ward 2A, I am unclear what rules I am applying to the isolation cubicles.
I would like to have some SOP issued about frequency of air sampling, implications of results i.e. air particle count v fungal loads!
I urgently require to identify a cubicle for our transplant patient.
Pamela, if you are free tomorrow I would welcome any guidance.
many thanks
Jean

From: McVeigh, Alanna
Sent: 01 July 2015 15:15
To: Lavery, Brian
Cc: Williams, Craig; Joannidis, Pamela; Kirkwood, Jean; MacKinnon, Yvonne; Gibson, Brenda; Ewins, Anna-Maria
Subject: Urgent/Important - Schiehallion testing
Importance: High

Hi Brian

I'm hoping you can help me! If not, can you please advise who can?

Jean Kirkwood has sent the attached on to me and we have a few queries relating to the results and format. Can I also check if these are the latest results or are the samples currently being taken weekly which would mean result should be available from yesterday?

1. I've attached the format we previously received - is it possible to receive this format again or will the attached be the new format?

2. Can you please advise on the thresholds for particle counts (min/max for safe use) - we don't have any guidance on this and not sure if there is a sliding scale for room use dependent on patient type. At the moment all our rooms are in use - some for general haematology/oncology patients and some for strict isolation, even though we have a range of counts in the isolation rooms from 519 to 163,306 (above report). We are concerned we don't have any guidance on when a room should be closed for use.

3. The above also applies to plate growth - Rooms 17, 18, 20 & 24 are all in use yet had fungus/yeast growth. At what point should the room be closed for use?

4. The attached only shows isolation room air sampling - can you please advise if other rooms in the ward have/are to be sampled and if so how regularly?

5. Can you please advise how regularly the isolation rooms will be sampled and if there will be a rotation ie 2 rooms per month etc?

6. Would it be possible to copy me in on future air sampling reports?

We are very concerned at the moment that we have a patient due to start transplant conditioning tomorrow. The initial plan was to put this patient into Room 25 but this is currently in use for a high-risk patient (however, if this is the best room for the transplant patient its likely the current patient would be moved). The second choices currently (based on the attached) would be rooms 20 & 22 as have no plate growth and less than 2,000 particles. Can you confirm that these are the best options?

Many thanks.

Alanna McVeigh
SCT Quality Manager / Administrator
Schiehallion Ward (Ward 2A)
Royal Hospital for Sick Children
1345 Govan Road
GLASGOW G51 4TF
[redacted]

From: Kirkwood, Jean
Sent: 23 June 2015 15:06
To: McVeigh, Alanna
Subject: FW: Schiehallion testing

From: Lavery, Brian
Sent: 23 June 2015 14:56
To: Williams, Craig
Cc: Inkster, Teresa (NHSmail); Kirkwood, Jean; Cullen, Karen; Mallon, John
Subject: Schiehallion testing

Hi Craig

Please find attached reports for the environmental testing in Ward 2A on 16/6/15 All fungi have been sent to Mycology for identification.

Regards

Brian Lavery
Technical Manager / IT Manager
Microbiology Department
New Lister Building
Glasgow Royal Infirmary
Alexandra parade
Glasgow G31 2ER

****
NHSGG&C Disclaimer

The information contained within this e-mail and in any attachment is confidential and may be privileged. If you are not the intended recipient, please destroy this message, delete any copies held on your systems and notify the sender immediately; you should not retain, copy or use this e-mail for any purpose, nor disclose all or any part of its content to any other person.

All messages passing through this gateway are checked for viruses, but we strongly recommend that you check for viruses using your own virus scanner as NHS Greater Glasgow & Clyde will not take responsibility for any damage caused as a result of virus infection.

****

****

This message may contain confidential information. If you are not the intended recipient please inform the sender that you have received the message in error before deleting it.
Please do not disclose, copy or distribute information in this e-mail or take any action in reliance on its contents: to do so is strictly prohibited and may be unlawful.

Thank you for your co-operation.

NHSmail is the secure email and directory service available for all NHS staff in England and Scotland NHSmail is approved for exchanging patient data and other sensitive information with NHSmail and GSi recipients NHSmail provides an email address for your career in the NHS and can be accessed anywhere

****
****
NHSGG&C Disclaimer

The information contained within this e-mail and in any attachment is confidential and may be privileged. If you are not the intended recipient, please destroy this message, delete any copies held on your systems and notify the sender immediately; you should not retain, copy or use this e-mail for any purpose, nor disclose all or any part of its content to any other person.

All messages passing through this gateway are checked for viruses, but we strongly recommend that you check for viruses using your own virus scanner as NHS Greater Glasgow & Clyde will not take responsibility for any damage caused as a result of virus infection.

****

Teresa,
Thank you for this.
Do you think we should contine to sample weekly? Although the other isolation rooms are occuppied, should we resample them to identify the best room for the next patient?

Best wishes,
Anna Maria

-----Original Message-----
From: Inkster Teresa (NHS GREATER GLASGOW & CLYDE - SGA20) [redacted]
Sent: 03 July 2015 11:16
To: Joannidis, Pamela; Walsh, Tom
Cc: Robertson, Lynne; McAuley, Mary; Kirkwood, Jean; Leighton, Sheenagh; Barmanroy, Jackie; McVeigh, Alanna; Ewins, Anna-Maria
Subject: RE: Urgent/Important - Schiehallion testing

Follwing sealing of the light fittings and cleaning repeat particle counts this morning are

Room 17 - 515
Room 18 - 1587

I have discussed these results with Jean . The transplant patient should be nursed in Room 17 . Air sampling results for fungi will be available in 5-7 days .

Kind Regards
Teresa

Dr Teresa Inkster
Consultant Microbiologist and Infection Control Doctor Dept of Microbiology Lister Building Glasgow Royal Infirmary [redacted]
From: Joannidis, Pamela [Pamela.Joannidis[redacted]
Sent: 03 July 2015 09:42
To: Inkster Teresa (NHS GREATER GLASGOW & CLYDE - SGA20)
Cc: Robertson Lynne (NHS GREATER GLASGOW & CLYDE - SGA20); Mcauley Mary (NHS GREATER GLASGOW & CLYDE - SGA20); Kirkwood Jean (NHS GREATER GLASGOW & CLYDE - SGA20); Leighton Sheenagh (NHS GREATER GLASGOW & CLYDE - SGA20); Barmanroy, Jackie; Mcveigh Alanna (NHS GREATER GLASGOW & CLYDE - SGA20); Ewins, Anna-Maria
Subject: RE: Urgent/Important - Schiehallion testing

Hi Teresa
This is really useful thanks.
The new Schiehallion has 8 rooms that are spec'd to BMT level with ante rooms and magnhelix gauges. Of these rooms 18 and 17 had the light fittings sealed yesterday and a deep clean has been carried out. Sampling has just taken place as agreed.
Pamela

Sent: 03 July 2015 14:39
To: Ewins, Anna-Maria
Subject: RE: Urgent/Important - Schiehallion testing

Yes Anna thats fine
Teresa

Dr Teresa Inkster
Consultant Microbiologist and Infection Control Doctor Dept of Microbiology Lister Building Glasgow Royal Infirmary Direct dial [redacted]
From: Ewins, Anna-Maria [redacted]
Sent: 03 July 2015 14:31
To: Inkster Teresa (NHS GREATER GLASGOW & CLYDE - SGA20)
Subject: RE: Urgent/Important - Schiehallion testing

Hi Teresa,
Do you think we can open room 18 up for non-SCT patients?
BW,
Anna Maria

-----Original Message-----
From: Inkster Teresa (NHS GREATER GLASGOW & CLYDE - SGA20) [redacted]
Sent: 03 July 2015 12:17
To: Ewins, Anna-Maria; Powrie, Ian
Cc: Kirkwood, Jean; McVeigh, Alanna
Subject: RE: Urgent/Important - Schiehallion testing

Hi Anna - yes I think we need to continue with weekly sampling at the moment for rooms 17 and 18 - these rooms are the best option at the moment . I will arrange this for next week . Until the other rooms have had light fittings sealed we will continue to have dust present in these rooms and particle counts will therefore be elevated. Ian - can you give us an indication as to how quickly the light fittings in the other 6 BMT rooms will be sealed- after that I will arrange repeat sampling for them.

Kind Regards
Teresa

Dr Teresa Inkster
Consultant Microbiologist and Infection Control Doctor Dept of Microbiology Lister Building Glasgow Royal Infirmary Direct dial : [redacted]
From: Ewins, Anna-Maria [Anna-Maria.Ewins[redacted]
Sent: 03 July 2015 12:13
To: Inkster Teresa (NHS GREATER GLASGOW & CLYDE - SGA20)
Cc: Kirkwood Jean (NHS GREATER GLASGOW & CLYDE - SGA20); Mcveigh Alanna (NHS GREATER GLASGOW & CLYDE - SGA20)
Subject: RE: Urgent/Important - Schiehallion testing

FW: Urgent/Important - Schiehallion testing

Inkster Teresa (NHS GREATER GLASGOW & CLYDE - SGA20)

Sent: 06 July 2015 16:52

To: Williams Craig (NHS Greater Glasgow & Clyde)

Cc: pamela.joannidis[redacted]

Craig - see below for the situation in Schiehallion. I still have not seen copies of the original spec for the unit, validation reports or water sampling results. I also do not have an update as to when the remaining 6 rooms will have the light fittings sealed. There is a 2nd transplant due to be undertaken shortly so this work needs to be completed ASAP.

Kind Regards
Teresa

Dr Teresa Inkster
Consultant Microbiologist and Infection Control Doctor
Dept of Microbiology
Lister Building
Glasgow Royal Infirmary
[redacted]

From: Inkster Teresa (NHS GREATER GLASGOW & CLYDE - SGA20)
Sent: 03 July 2015 09:50
To: Walsh Thomas (NHS Greater Glasgow & Clyde)
Subject: FW: Urgent/Important - Schiehallion testing

Sorry Tom , I should have copied you in on this
Best wishes
Teresa

Dr Teresa Inkster
Consultant Microbiologist and Infection Control Doctor
Dept of Microbiology
Lister Building
Glasgow Royal Infirmary
[redacted]

From: McVeigh, Alanna [redacted]
Sent: 03 July 2015 09:42
To: Inkster Teresa (NHS GREATER GLASGOW & CLYDE - SGA20); Leighton Sheenagh (NHS GREATER GLASGOW & CLYDE - SGA20); pamela.joannidis[redacted] Kirkwood Jean (NHS GREATER GLASGOW & CLYDE - SGA20); Barmanroy, Jackie
Cc: Williams Craig (NHS GREATER GLASGOW & CLYDE - SGA20); MacKinnon, Yvonne; Gibson, Brenda; Ewins, Anna-Maria; Robertson Lynne (NHS GREATER GLASGOW & CLYDE - SGA20); Mcauley Mary (NHS GREATER GLASGOW & CLYDE - SGA20); Powrie Ian (NHS GREATER GLASGOW & CLYDE - SGA20); Coyne Patricia (NHS GREATER GLASGOW & CLYDE - SGA20)
Subject: RE: Urgent/Important - Schiehallion testing

Hi Teresa

Thank you for your email below which answers all my queries. Very much appreciated. I have previously asked Ian for the validation reports so would be grateful of a copy when this is available.

Best wishes.

Alanna

-----Original Message-----
From: Inkster Teresa (NHS GREATER GLASGOW & CLYDE - SGA20) [redacted]
Sent: 02 July 2015 19:04
To: Leighton, Sheenagh; Joannidis, Pamela; Kirkwood, Jean; McVeigh, Alanna; Barmanroy, Jackie
Cc: Williams, Craig; MacKinnon, Yvonne; Gibson, Brenda; Ewins, Anna-Maria; Robertson, Lynne; McAuley, Mary; Powrie, Ian; Coyne, Patricia
Subject: RE: Urgent/Important - Schiehallion testing

Thanks Sheenagh

I thought it would be useful to summarise the discussions at our meeting this afternoon which was held in response to the queries in the email below from Alanna yesterday.

1) Air sampling has been centralised at the GRI microbiology lab so reports will be issued in this format - the info contained in the reports will include particle counts, air sampling results and comments in relation to people in the vicinity of the testing and/or cleaning in progress at the time . This info will aid with interpretation.

2+3)Ideally particle counts should be < 1000 at 0.5um. What type of patient is in the room is irrelevant as all these rooms should meet the spec for a BMT unit. We should not expect to see any fungus on the plates from these rooms. Elevated particle counts +/- fungal growth requires a risk assessment on each occasion by infection control. This should include checking for water ingress and that engineering parameters are satisfactory. Infection control will advise whether these rooms need to be closed.

RHSC BMT Meeting Monday 10th August 2015
In attendance:

G Archibald (Chair)
J Armstrong
B Gibson
J Hood
B Jones
D Louden
A Mathers
S McNamee
P Moir
J Redfern
D Stewart
T Walsh

	Action
RHSC BMT ACTION PLAN The meeting was held to discuss concerns regarding the BMT formerly at the RHSC. The following actions were agreed:	
1. Provide confirmation of the Specification document used for the design and build (Scottish Building Notes 2008)	D Louden
2. Provide confirmation the facility has been built in accordance with that specification.	D Louden
3. Provide confirmation of commissioning of the facility.	D Louden/ ICT
4. Identification of alternate English building note 2013. Website link/copied to be e-mailed to those attending.	J Hood
5. Call round of similar units elsewhere in the UK to identify their facilities configuration (lobbied rooms, positive pressure etc) based on an agreed questionnaire template.	S McNamee/ B Gibson
6. Identification of further actions which could improve performance of existing facility: - testing of seals - adjustment of pressure - relocation of any external environmental factors - further deep cleaning of rooms	D Louden/ ICT
7. Review of gathered microbiological data: Is performance improving in the facility.	T Walsh
8. Caring for patients (i) Decision not to admit Patient ZZ - discussion to be	J Redfern/

Lang, Ann

From: Williams, Craig
Sent: 01 September 2015 16:48
To: Lang, Ann
Subject: FW: Highly Infectious patients in the NSGH and other issues!

From: Williams, Craig
Sent: 12 August 2014 20:02
To: Brown, Joyce; McNamee, Sandra
Subject: Re: Highly Infectious patients in the NSGH and other issues!

Dear Joyce

One of my concerns is the total number of of lobbied isolation rooms available within the NSGH. The addition of the adult bone marrow transplant unit and the brownlee to the specialties on site will increase the
****
Sent from a NHSGG&C BlackBerry device
****

From: Brown, Joyce
Sent: Tuesday, August 12, 2014 06:09 PM GMT Standard Time
To: McNamee, Sandra; McCluskey, Fiona; Williams, Craig
Cc: Newton, Margaret; Gallacher, Stephen; Gallacher, Stephen; Griffin, Heather; Macleod, Mairi; Walsh, Tom; Joannidis, Pamela; Griffin, Heather; Walsh, Tom
Subject: RE: Highly Infectious patients in the NSGH and other issues!

Dear Sandra

We are going to discuss any Brownlee issues at the ECMS SMT meeting tomorrow

Regards
Joyce

From: McNamee, Sandra [redacted]
Sent: 12 August 2014 11:55
To: McCluskey, Fiona; Williams, Craig
Cc: Newton, Margaret; Brown, Joyce; Gallacher, Stephen; Gallacher, Stephen; Griffin, Heather; Macleod, Mairi; Walsh, Tom; Joannidis, Pamela; Griffin, Heather; Walsh, Tom
Subject: RE: Highly Infectious patients in the NSGH and other issues!

Hi
I don't see anything in the guidance that specifies where this should be located. I have discussed with Pamela and agreed that provided the blood samples are packaged appropriately then this can be located in the clean utility. This should be reflected in local operational policies.
Kind regards
Sandra

Sandra McNamee
Assistant Director of Nursing
Infection Prevention & Control
[redacted]

From: McCluskey, Fiona
Sent: 11 August 2014 15:21
To: Williams, Craig; McNamee, Sandra
Cc: Newton, Margaret; Brown, Joyce; Gallacher, Stephen; Gallacher, Stephen; Griffin, Heather; Macleod, Mairi; Walsh, Tom; Joannidis, Pamela; Griffin, Heather
Subject: RE: Highly Infectious patients in the NSGH and other issues!

Hi Craig

I think Anne Harkness is on annual leave but will find out when she is back and who she needs to attend. Will be in touch. Do you have a PA or keep your own diary?

Regards

Fiona

From: Williams, Craig
Sent: 11 August 2014 15:20
To: McCluskey, Fiona; McNamee, Sandra
Cc: Newton, Margaret; Brown, Joyce; Gallacher, Stephen; Gallacher, Stephen; Griffin, Heather; Macleod, Mairi; Walsh, Tom; Joannidis, Pamela
Subject: RE: Highly Infectious patients in the NSGH and other issues!

Dear Fiona

I agree with Sandra that there are a number of concerns around this move which need discussion. Would it be worth the project team, ourselves and ECMS/Brownlee representatives meeting to discuss this in some detail

Craig.

From: McCluskey, Fiona
Sent: 11 August 2014 15:17
To: McNamee, Sandra
Cc: Newton, Margaret; Brown, Joyce; Gallacher, Stephen; Gallacher, Stephen; Griffin, Heather; Macleod, Mairi; Williams, Craig; Walsh, Tom; Joannidis, Pamela
Subject: RE: Highly Infectious patients in the NSGH and other issues!

Hi Sandra

We were advised by ECMS that the Brownlee is moving this was not a Project decision – I think this reasoning was the move of HDU from GGH, Stephen would be best to advise.

There are no lobbied rooms within the adult tower of the hospital. The rooms are all mechanically ventilated. The only lobbied rooms within the adult hospital are in ITU/HDU. Is CDU you are referring to adult or childrens? We are still waiting for ECMS to advise on the bed configuration for the adult hospital.

Kind Regards

Fiona

Fiona McCluskey
Senior Nurse Advisor
North South Hospitals Project

Construction Offices
(off Hardgate Road)
Southern General Hospital
Glasgow G51 4SX
[redacted]

From: McNamee, Sandra [redacted]
Sent: 11 August 2014 15:11
To: McCluskey, Fiona
Cc: Newton, Margaret; Brown, Joyce; Gallacher, Stephen; Gallacher, Stephen; Griffin, Heather; Macleod, Mairi; Williams, Craig; Walsh, Tom; Joannidis, Pamela
Subject: RE: Highly Infectious patients in the NSGH and other issues!

Hi Fiona
Thank you for your e mail - as you rightly point out the Brownlee Unit was not part of the planning process and therefore IPC advice on this was not actively sought nor given. I (and I think I will be correct in stating) and Professor Williams have significant concerns about this, especially in relation to the management of highly infectious patients, e.g. MDR TB who should be managed in a specialist unit with lobbied negative pressure isolation rooms. Can I assume (as previously discussed) that the respiratory unit has three negatively pressured lobbied isolation rooms and medical receiving two? Can I also ask what floor you propose to transfer CDU to?

Regarding the pneumatic tube system - this is a building note that I will have a look at and get back to you on.

Kind regards
Sandra

Sandra McNamee
Assistant Director of Nursing
Infection Prevention & Control
[redacted]

From: McCluskey, Fiona
Sent: 11 August 2014 13:45
To: McNamee, Sandra
Cc: Newton, Margaret; Brown, Joyce; Gallacher, Stephen; Gallacher, Stephen; Griffin, Heather; Macleod, Mairi
Subject: Highly Infectious patients in the NSGH and other issues!

Hi Sandra

Margaret Newton has contacted me with some concerns regarding the New Hospital

1. **The flow of highly infectious patients into the New South**.
   As you may recall the hospital was never planned on the basis of the transfer of the Brownlee.The generic bedrooms are mechanically ventilated with pressure in the rooms negative to the corridors. There are no lobbied bedrooms in the adult tower (although there are lobbied bedrooms in the CDU & wards of the NCH). This was agreed in 2009 with microbiologist/ICT involvement. In the adult there are 12 lobbied isolation rooms; 8 with en-suite within the ITU/HDU component of the Critical Care Unit.
   Margaret is concerned about the flows of patients into the adult hospital. I would have thought an SOP

2. **Pneumatic Tube System & Clean Utilities**

The PTS is situated within the clean utility in both the adult and childrens hospital. This includes the haemato-oncology wards within both adult and childrens hospitals. You may remember seeing this on your visit to the wards. Margaret has told me that the Beatson and other hospitals do not have PTS within the Clean utility as blood specimens are not allowed within 'clean rooms'. PTS is integral to the flows within the hospital and this issue was never raised during the 1:200 or 1:50 design stages.

Can you advise on both these issues?

Kind Regards

Fiona

Fiona McCluskey
Senior Nurse Advisor
New South Hospitals Project
Top Floor
Construction Offices
(off Hardgate Road)
Southern General Hospital
Glasgow G51 4SX
[redacted]

Subject: Lobbied rooms in nSGH

Craig

I can confirm that there are 10 rooms lobbies within the adult Critical care Unit and 2 rooms with lobbies in the Renal Acuity wards

Kind Regards

Fiona

Fiona McCluskey
Senior Nurse Advisor
New South Hospitals Project
Top Floor
Construction Offices
(off Hardgate Road)
Southern General Hospital
Glasgow G51 4SX
[redacted]

****
NHSGG&C Disclaimer

The information contained within this e-mail and in any attachment is confidential and may be privileged. If you are not the intended recipient, please destroy this message, delete any copies held on your systems and notify the sender immediately; you should not retain, copy or use this e-mail for any purpose, nor disclose all or any part of its content to any other person.

All messages passing through this gateway are checked for viruses, but we strongly recommend that you check for viruses using your own virus scanner as NHS Greater Glasgow & Clyde will not take responsibility for any damage caused as a result of virus infection.

****

Lang, Ann

From: Walsh, Tom
Sent: 01 September 2015 11:19
To: Lang, Ann
Subject: FW: Lobbied side rooms in NSGH

From: McCamley, Pamela
Sent: 14 January 2015 16:09
To: Williams, Craig
Cc: Walsh, Tom
Subject: RE: Lobbied side rooms in NSGH

Craig, yes Jennifer is happy for you to attend and feed back to her and to BICC (I understand it was the BICC that asked for a review?). If there are really significant problems can you escalate to Jennifer asap please, as Jennifer and Robert will need to discuss with David asap.

I will let David know that Jennifer will let you take forward and feed back to her.

Thanks

Pamela

From: Williams, Craig
Sent: 14 January 2015 09:58
To: McCamley, Pamela
Cc: Walsh, Tom
Subject: FW: Lobbied side rooms in NSGH

Dear Pamela

This is about the specification for side rooms for the Brownlee and BMT moving to the NSGH. I am happy to report back to Jennifer if she thinks that is appropriate but if you wouldn't mind letting David Loudon know

Best wishes

Craig

From: Loudon, David
Sent: 13 January 2015 16:47
To: Walsh, Tom; Williams, Craig
Cc: Armstrong, Jennifer; 'David Hall'; Moir, Peter; Hirst, Allyson
Subject: RE: Lobbied side rooms in NSGH

Craig

Can we arrange a meeting next week to discuss please?

I'll ask Peter Moir and David Hall to join me. Would be helpful if Jennifer could also attend.

Regards

David W. Loudon, MCIOB, CBIFM, MBA
Project Director - South Glasgow Hospitals Development / Director of Facilities and Capital Planning - Designate
NHS Greater Glasgow & Clyde
New South Glasgow Hospital Site Offices
Top Floor, NHS Offices
Hardgate Road
Glasgow
G51 4SX

[redacted]

From: Walsh, Tom
Sent: 13 January 2015 15:08
To: Loudon, David; Williams, Craig
Cc: McCluskey, Fiona; Armstrong, Jennifer; 'David Hall'; Moir, Peter; Wrath, Frances
Subject: RE: Lobbied side rooms in NSGH

Dear David

Using Tom's computer. Thanks for your reply, my main concern is section 1.10 of the SHPN that you sent to me which states that:

Exclusions

1.10 This Supplement does not describe the specialist facilities required in infectious disease units or on wards where severely immuno-compromised patients are nursed. Guidance for these facilities will follow in a further Supplement to SHPN 04.

If we are to house the ID unit and BMT in premises built to SHPN 04 then the specification has specifically excluded these units.

Craig

From: Loudon, David
Sent: 06 January 2015 09:59
To: Williams, Craig
Cc: Walsh, Tom; McCluskey, Fiona; Armstrong, Jennifer; 'David Hall'; Moir, Peter; Wrath, Frances
Subject: RE: Lobbied side rooms in NSGH

Craig,

Thanks for your message below and please also see the response below from Currie & Brown and Brookfield Multiplex. I hope that this is a satisfactory answer to your query. Please confirm. I have also attached a copy of SHPN 4 Supplement 1.

Regards

David

Project Director - South Glasgow Hospitals Development / Director of Facilities and Capital Planning - Designate
NHS Greater Glasgow & Clyde
New South Glasgow Hospital Site Offices
Top Floor, NHS Offices
Hardgate Road
Glasgow
G51 4SX

[redacted]

David,

Further to your note prior to Christmas, I tasked Brookfield & their design team with reviewing the guidance document 'The Prevention and Control of Tuberculosis in the United Kingdom' with particular reference to ANNEX D ENVIRONMENTAL CONTROLS: VENTILATION.

As you will note below, they have confirmed that, in their professional opinion, they see no reason as to why the isolation rooms cannot be used under the guidance as they have been designed in accordance with SHPN 04 supplement 1, attached.

Regards

David

David Hall
FCIOB/MAPM
Director
Currie & Brown
Email: david.hall[redacted]
Building 3, 2 Parklands Avenue, Maxim Office Park, Eurocentral
Lanarkshire ML1 4WQ
United Kingdom
[redacted]
Website: www.curriebrown.com

Currie & Brown UK Limited
Registered in England and Wales
Registered Number 1300409
Registered Office: Dashwood House, 69 Old Broad Street, London, EC2M 1QS

From: Colin Grindlay [redacted]
Sent: 05 January 2015 16:24
To: David Hall
Cc: Darren Pike
Subject: FW: Christmas Reading

David,

Please see attached correspondence from Wallace Whittle advising the Isolation rooms throughout the hospital have been designed in line with SHPN 04 Supplement 1.

Wallace Whittle see no reason as to why the isolation rooms cannot be used under the guidance issued previously by NHS.

Regards

Colin Grindlay
M&E Manager - Construction

Brookfield BM MULTIPLEX

From: Williams, Craig
Sent: 22 December 2014 09:29
To: Loudon, David
Cc: Walsh, Tom; McCluskey, Fiona
Subject: Lobbied side rooms in NSGH

Dear David

At the last Board Infection Control Committee I was asked by Jennifer Armstrong to contact you to find out where we are with information from the project team around lobbied side rooms at the NSGH.

Sandar MacNamee and I met with Fiona McCluskey and a ventilation expert from the project team several months ago to discuss two things in particular:

1) Whether the lobbied side rooms meet the current guidance for housing Bone marrow transplant patients

2) Whether the lobbied side rooms meet the DH guidance for housing Multi-Drug resistant TB patients

Fiona has all of the relevant technical information from our meeting. The suitability of these rooms impacts on the move of the BMT and ID units from GGH to NSGH so it would be helpful to gat an answer as soon as possible.

Best wishes

Prof Craig Williams
Lead ICD NHSGGC

RE: Tuesday 20 January at 4pm - Lobbied side rooms in NSGH (David Louden)

Inkster Teresa (NHS Greater Glasgow & Clyde)

Sent: 20 January 2015 09:49

To: Hamilton, Pauline [redacted]

Cc: Williams Craig (NHS Greater Glasgow & Clyde)

Sorry , I won't be able to make this. I'm working at home today because one of my boys is off school sick.
Teresa
Dr Teresa Inkster
Consultant Microbiologist and Infection Control Doctor
Dept of Microbiology
Lister Building
Glasgow Royal Infirmary
[redacted]

From: Hamilton, Pauline [redacted]
Sent: 20 January 2015 09:39
To: Inkster Teresa (NHS Greater Glasgow & Clyde)
Cc: Williams Craig (NHS Greater Glasgow & Clyde)
Subject: Tuesday 20 January at 4pm - Lobbied side rooms in NSGH (David Louden)

Hi Teresa

Craig has just left a message inviting you to attend today's meeting. See below.

Thanks
Pauline [redacted]

From: Hamilton, Pauline
Sent: 16 January 2015 15:16
To: Hirst, Allyson
Subject: FW: possible dates next week for Lobbied side rooms in NSGH (David Louden)

Hi Allyson

Craig has confirmed he can meet with David Louden, Peter Moir and David Hall at 4pm on Tuesday 20 January in the SGH Project Offices. Tom Walsh is not available to attend this meeting.

I'll send a meeting request to David Louden, Peter and yourself.

Thanks for your help.

Pauline [redacted]

From: Williams, Craig
Sent: 16 January 2015 11:42
To: Hamilton, Pauline
Subject: RE: possible dates next week for Lobbied side rooms in NSGH (David Louden)

Dear Pauline

We will go for Tuesday at 4 and I will update Tom

Craig

From: Hamilton, Pauline
Sent: 15 January 2015 12:53
To: Williams, Craig
Subject: possible dates next week for Lobbied side rooms in NSGH (David Louden)

Hi Craig

I've spoken to Allyson re dates.

David Louden, Peter Moir and David Hall are all available to meet at 4pm on Tuesday 20 January, SGH

A49618520

Project Offices however Tom is not back at work until Wednesday.

So if Tom is to attend also, the other possible dates are:

- 1.30pm Thursday 22 January (JB Russell House) - but you have the REF and Research Planning Event in Paisley (just in case you're not there for the whole event)

- 4.30pm Friday 23 January (SGH Project Offices) - you're in Perth from 2-3pm

We didn't look at the following week as I know you're keen to have the meeting asap.

Please let me know if any of the dates can work.

Thanks
Pauline [redacted]

From: Hirst, Allyson
Sent: 15 January 2015 12:35
To: Hamilton, Pauline
Subject: FW: Lobbied side rooms in NSGH

Pauline

David can do neither of these dates - both area already booked out with meeting I cannot get David out of. You could give me a call this afternoon to review the diary to see if anything else looks doable

Allyson

From: Loudon, David
Sent: 14 January 2015 16:34
To: Hirst, Allyson
Subject: FW: Lobbied side rooms in NSGH

David W. Loudon, MCIOB, CBIFM, MBA
Project Director - South Glasgow Hospitals Development / Director of Facilities and Capital Planning - Designate
NHS Greater Glasgow & Clyde
New South Glasgow Hospital Site Offices
Top Floor, NHS Offices
Hardgate Road
Glasgow
G51 4SX

[redacted]

From: Hamilton, Pauline
Sent: 14 January 2015 16:25
To: Loudon, David
Cc: Williams, Craig
Subject: RE: Lobbied side rooms in NSGH

Dear David

Please let me know if you and your colleagues are available to meet with Craig and Tom on either of the dates below:

- 3pm onwards on Wednesday 21 January

- Would need to be 8.30am on Thursday 22 January

I look forward to hearing from you.

Kind Regards
Pauline [redacted]

Dear David

At the last Board Infection Control Committee I was asked by Jennifer Armstrong to contact you to find out where we are with information from the project team around lobbied side rooms at the NSGH.

Sandar MacNamee and I met with Fiona McCluskey and a ventilation expert from the project team several months ago to discuss two things in particular:

1) Whether the lobbied side rooms meet the current guidance for housing Bone marrow transplant patients

2) Whether the lobbied side rooms meet the DH guidance for housing Multi-Drug resistant TB patients

Fiona has all of the relevant technical information from our meeting. The suitability of these rooms impacts on the move of the BMT and ID units from GGH to NSGH so it would be helpful to gat an answer as soon as possible.

Best wishes

Prof Craig Williams
Lead ICD NHSGGC

****
NHSGG&C Disclaimer

The information contained within this e-mail and in any attachment is confidential and may be privileged. If you are not the intended recipient, please destroy this message, delete any copies held on your systems and notify the sender immediately; you should not retain, copy or use this e-mail for any purpose, nor disclose all or any part of its content to any other person.

All messages passing through this gateway are checked for viruses, but we strongly recommend that you check for viruses using your own virus scanner as NHS Greater Glasgow & Clyde will not take responsibility for any damage caused as a result of virus infection.

****

FW: Highly Infectious patients in the NSGH and other issues!

McNamee, Sandra [redacted]

Tue 10/05/2016 11:52

To:Inkster Teresa (NHS GREATER GLASGOW & CLYDE) [redacted]

Sandra McNamee
Associate Nurse Director
Infection Prevention & Control
[redacted]

From: McCluskey, Fiona
Sent: 11 August 2014 15:21
To: Williams, Craig; McNamee, Sandra
Cc: Newton, Margaret; Brown, Joyce; Gallacher, Stephen; Gallacher, Stephen; Griffin, Heather; Macleod, Mairi; Walsh, Tom; Joannidis, Pamela; Griffin, Heather
Subject: RE: Highly Infectious patients in the NSGH and other issues!

Hi Craig

I think Anne Harkness is on annual leave but will find out when she is back and who she needs to attend. Will be in touch. Do you have a PA or keep your own diary?

Regards

Fiona

From: Williams, Craig
Sent: 11 August 2014 15:20
To: McCluskey, Fiona; McNamee, Sandra
Cc: Newton, Margaret; Brown, Joyce; Gallacher, Stephen; Gallacher, Stephen; Griffin, Heather; Macleod, Mairi; Walsh, Tom; Joannidis, Pamela
Subject: RE: Highly Infectious patients in the NSGH and other issues!

Dear Fiona

I agree with Sandra that there are a number of concerns around this move which need discussion. Would it be worth the project team, ourselves and ECMS/Brownlee representatives meeting to discuss this in some detail

Craig

From: McCluskey, Fiona
Sent: 11 August 2014 15:17
To: McNamee, Sandra
Cc: Newton, Margaret; Brown, Joyce; Gallacher, Stephen; Gallacher, Stephen; Griffin, Heather; Macleod, Mairi; Williams, Craig; Walsh, Tom; Joannidis, Pamela
Subject: RE: Highly Infectious patients in the NSGH and other issues!

Hi Sandra

We were advised by ECMS that the Brownlee is moving this was not a Project decision – I think this reasoning was the move of HDU from GGH, Stephen would be best to advise.

There are no lobbied rooms within the adult tower of the hospital. The rooms are all mechanically ventilated. The only lobbied rooms within the adult hospital are in ITU/HDU. Is CDU you are referring to adult or childrens? We are still waiting for ECMS to advise on the bed configuration for the adult hospital.

Kind Regards

Fiona

Fiona McCluskey
Senior Nurse Advisor
New South Hospitals Project
Top Floor
Construction Offices
(off Hardgate Road)
Southern General Hospital
Glasgow G51 4SX
[redacted]

From: McNamee, Sandra [redacted]
Sent: 11 August 2014 15:11
To: McCluskey, Fiona
Cc: Newton, Margaret; Brown, Joyce; Gallacher, Stephen; Gallacher, Stephen; Griffin, Heather; Macleod, Mairi; Williams, Craig; Walsh, Tom; Joannidis, Pamela
Subject: RE: Highly Infectious patients in the NSGH and other issues!

Hi Fiona
Thank you for your e mail - as you rightly point out the Brownlee Unit was not part of the planning process and therefore IPC advice on this was not actively sought nor given. I (and I think I will be correct in stating) and Professor Williams have significant concerns about this, especially in relation to the management of highly infectious patients, e.g. MDR TB who should be managed in a specialist unit with lobbied negative pressure isolation rooms. Can I assume (as previously discussed) that the respiratory unit has three negatively pressured lobbied isolation rooms and medical receiving two? Can I also ask what floor you propose to transfer CDU to?

Regarding the pneumatic tube system - this is a building note that I will have a look at and get back to you on.

Kind regards
Sandra

Sandra McNamee
Assistant Director of Nursing
Infection Prevention & Control
[redacted]
A49618320

From: McCluskey, Fiona
Sent: 11 August 2014 13:45
To: McNamee, Sandra
Cc: Newton, Margaret; Brown, Joyce; Gallacher, Stephen; Gallacher, Stephen; Griffin, Heather; Macleod, Mairi
Subject: Highly Infectious patients in the NSGH and other issues!

Hi Sandra

Margaret Newton has contacted me with some concerns regarding the New Hospital

1. **The flow of highly infectious patients into the New South**.
   As you may recall the hospital was never planned on the basis of the transfer of the Brownlee.The generic bedrooms are mechanically ventilated with pressure in the rooms negative to the corridors. There are no lobbied bedrooms in the adult tower (although there are lobbied bedrooms in the CDU & wards of the NCH). This was agreed in 2009 with microbiologist/ICT involvement. In the adult there are 12 lobbied isolation rooms; 8 with en-suite within the ITU/HDU component of the Critical Care Unit.
   Margaret is concerned about the flows of patients into the adult hospital. I would have thought an SOP could be developed for these patients?

2. **Pneumatic Tube System & Clean Utilities**

The PTS is situated within the clean utility in both the adult and childrens hospital. This includes the haemato-oncology wards within both adult and childrens hospitals. You may remember seeing this on your visit to the wards. Margaret has told me that the Beatson and other hospitals do not have PTS within the Clean utility as blood specimens are not allowed within 'clean rooms'. PTS is integral to the flows within the hospital and this issue was never raised during the 1:200 or 1:50 design stages.

Can you advise on both these issues?

Kind Regards

Fiona

Fiona McCluskey
Senior Nurse Advisor
New South Hospitals Project
Top Floor
Construction Offices
(off Hardgate Road)
Southern General Hospital
Glasgow G51 4SX
[redacted]
[redacted]

****
NHSGG&C Disclaimer

The information contained within this e-mail and in any attachment is confidential and may be privileged. If you are not the intended

recipient, please destroy this message, delete any copies held on your systems and notify the sender immediately; you should not retain, copy or use this e-mail for any purpose, nor disclose all or any part of its content to any other person.

All messages passing through this gateway are checked for viruses, but we strongly recommend that you check for viruses using your own virus scanner as NHS Greater Glasgow & Clyde will not take responsibility for any damage caused as a result of virus infection.

****

Lang, Ann

From: McNamee, Sandra
Sent: 07 September 2015 15:26
To: Lang, Ann
Subject: FW: Lobbied rooms in nSGH

Sandra McNamee
Associate Nurse Director
Infection Prevention & Control
[redacted])

From: Williams, Craig
Sent: 20 August 2014 10:11
To: McCluskey, Fiona
Cc: McNamee, Sandra
Subject: RE: Lobbied rooms in nSGH

Dear Fiona

Thanks for information but I need an assessment from the design team to assure me that the rooms meet the specification I described in the earlier e mail. This is because the Brownlee is moving to the South and so all of our MDRTB patients will be managed there.

Best wishes

Craig

From: McCluskey, Fiona
Sent: 20 August 2014 10:08
To: Williams, Craig
Subject: RE: Lobbied rooms in nSGH

Craig

I have attached the ADB sheet which describes the references to the mechanical ventilation of the room.

Hope this helps

I understand that Mairi Macleod is arranging a meeting to discuss the isolation rooms in the new childrens haemato-oncology unit to discuss the ventialtion of rooms

Regards

Fiona

Fiona McCluskey
Senior Nurse Advisor
New South Hospitals Project

Construction Offices
(off Hardgate Road)
Southern General Hospital
Glasgow G51 4SX
[redacted]

From: Williams, Craig
Sent: 20 August 2014 09:40
To: McCluskey, Fiona
Cc: McNamee, Sandra
Subject: RE: Lobbied rooms in nSGH

Dear Fiona

Thanks, could I just double check that the lobbied side rooms meet the specifications contained in:

The Interdepartmental Working Group on Tuberculosis (1998) The prevention and control of tuberculosis in the United Kingdom: UK guidance on the prevention and control of transmission of 1. HIV-related tuberculosis 2. drug-resistant, including multiple drug-resistant, tuberculosis. London: Department of Health. Available from www.dh.gov.uk.

Best wishes

Craig

From: McCluskey, Fiona
Sent: 20 August 2014 09:25
To: Williams, Craig
Subject: Lobbied rooms in nSGH

Craig

I can confirm that there are 10 rooms lobbies within the adult Critical care Unit and 2 rooms with lobbies in the [redacted]nal Acuity wards

Kind Regards

Fiona

Fiona McCluskey
Senior Nurse Advisor
New South Hospitals Project
Top Floor
Construction Offices
(off Hardgate Road)
Southern General Hospital
Glasgow G51 4SX
[redacted]

Email from peter Moir

HAEMATO ONCOLOGY - LEVEL 4 WARD B WORKS

29 July 2015
13:48

Subject	**HAEMATO ONCOLOGY - LEVEL 4 WARD B WORKS**
From	Moir, Peter
To	Jenkins, Gary
Cc	Williams, Craig; Powrie, Ian; Parker, Anne; Campbell, Myra; Morrison, Anne; Clark, Andrew; 'David Wilson'; Loudon, David; 'Gillon Armstrong'; Alasdair Fernie
Sent	29 July 2015 13:37

Gary

An update on current position;

Works - I visited the works on Level 4 this morning and confirm Brookfield has set up the perimeter of the works by sealing off doorways as required by the HAI Scribe review and documentation. An airlock has been established at the east end of the ward and the extract ventilation is running to create a negative pressure within the ward to stop dust migrating into Ward 4C – the Haemato Oncology beds that remain in the adjacent ward, and also the surrounding corridors.

Materials Supply – materials will be delivered to the Laboratory Block yard and taken through the basement to a designated lift in Core C and up to level 4. Brookfield are liaising with Jim Magee from FM to manage this process and minimise impact on AGV operation.

Water - taps will be run during the works at agreed frequency to meet Legionella regs.

Up-rated AHU motor and gear – I have asked for confirmation that the equipment will continue to supply air to the room to achieve 5-10pa when the HEPA filter has reached the end of its service life. I await a response from Brookfield. I have also asked to be provided with the manufacturers recommendations on service life and replacement intervals for the HEPA filters. Note maintenance regimes will require to match the recommended replacement intervals.

Digital Gauges – I have issued a PMI to Brookfield to establish feasibility of installing digital gauges, noting requirement to maintain the current programme. I have supplied them with the details of the manufacturer of the gauges in the Beatson ward. I have requested that an audible alarm is linked, to sound after a pressure drop of circa 5 minutes as requested. I think the main challenge here is the availability of digital gauges to meet the completion date of end September. I will keep you updated on progress, if digital gauges cannot be sourced in time then the magnahelic type as fitted elsewhere in isolation rooms around the hospital will be supplied and installed.

HOW-039 Clean Utility – I have issued a PMI to Brookfield to establish the cost to hand door to this room, fit hold open stay to door linked to fire alarm system and disengage number lock. I don't have a feel for what this may cost. It would be the intention to have this work undertaken before end of September, as stated a change request will need to be signed off for this.

3 No Shower Spaces – remedial works to these showers have been completed by Brookfield.

24 Single Rooms – works will be carried out in the 24 rooms as per my email 21st July enclosing Brookfield's

proposals, I will highlight the key points;

- Install plasterboard ceilings, sealed at perimeter, taped and filled joints and painted with anti-bacterial paint.
- Access hatches will be provided in the ceiling for access to services as required, these will be sealed with silicone.
- Light fittings in the ceiling will be fitted with IP44 diffuser and further sealed with silicone.
- En-suite shower/WC grid ceiling retained, and service grilles and tiles will be silicone sealed, on advice from our Technical Adviser that access not required above for regular maintenance.
- Rooms to achieve 5-10 pa + differential pressure to corridor of ward.
- Pressure gauges will be fitted to individual rooms (in corridor outside each room) to show pressure in room, see note above, type to be confirmed.
- New HEPA filters will be supplied and installed to the 24 single rooms, these will receive a DOP test.
- New motors, inverters and other kit will be fitted to the main AHU for Ward 4B, Brookfield has confirmed that they anticipate achieving a minimum air change rate of 6 per hour.
- Air permeability testing of each single room has been requested by the Board, this is not a requirement as rooms not isolation standard, cost to be borne by Board.
- On completion the air system will be cleaned and fully tested with swab samples being taken. AHU filters changed. Tests to ensure 5-10 pa air pressure differential being achieved. Supply of commissioning data.
- All finishes made good and full sparkle clean of ward at completion for inspection by Board team.

Pentamidine Room – I have checked the project specification, the original room data sheet for this room notes balanced pressure (to corridor). However a Board project manager's instruction (PMI 259) was issued as a clarification in December 2013. This noted that the room should operate at a negative pressure to corridor (no value noted) and that the design supply/extract ventilation rate of 125 lit/sec should be adjusted to deliver the negative pressure within the Pentamidine Room. Brookfield has confirmed that they have been able to adjust the system to provide a negative 1.5pa pressure to the room (negative to corridor) with an air flow through the room of 10 air changes per hour.

To summarise, I can confirm Brookfield are proceeding to make changes to Ward 4B based on the above criteria and the documentation issued on 21st July. Unless I hear to the contrary by 2pm on Friday 31st July the above will be the basis for verifying the installation prior to handover by Brookfield to the Board for a deep clean followed by particulate tests undertaken by Craig Williams and his team sometime in first week of October.

If you require any further information please let me know.

Regards

Peter Moir
Deputy Project Director

South Glasgow Hospitals Project Office
NHS Greater Glasgow & Clyde
Room L1/25
Management Building
1345 Govan Road
Glasgow G51 4TF

[redacted]

BMT Original specification - Gartnavel site - Dr John Hood

The design specification of the BMT unit on the top floor of the Beatson Oncology Centre was developed following discussions with Andy Streifel (world expert in air quality) , University of Minnesota and Peter Hoffman (HPA now PHE). CDC guidance: 'Guidelines for environmental infection control in health-care facilities' were also consulted (the relevant diagrams and words on protective isolation rooms written by Andy).

Ventilation specification etc

BMT air filtration to isolation rooms Pre-filter EU3, then EU9 (95%) and final EU12 (99.97% HEPA). Corridor also HEPA filtered air.

Positive pressure + 5-10 Pa,room to corridor (aim for 8Pa if possible).

Clear visual digital display of pressure differential (room to corridor) for each room – NOT a magnahelix guage

Air changes – 10 to 12/ hour

Dust free design

Sealed rooms with no opening windows.

Blinds integral to windows.

Self closing doors.

Well sealed rising services within service voids.

Controllable adjustable temperature and humidity.

Water proof paint in toilet areas or vinyl covering.

Plasterboard with fungicide in toilet areas (only retrofitted in the rooms that suffered water damage).

All services to be accessed from corridor NOT through solid ceiling in patient rooms.

There were also 2 positive pressure isolation rooms, as above, with a negative pressure anti room allowing for source isolation of a patient requiring protective isolation.

Legionella control

BMT patients – no hot water from storage and no thermostatic mixing valves.

Cold water from main through a 0.5 micron Memcor filter then into a fibreglass tank.

Water then chilled to 7°C and continuously circulated.

Instantaneous water heaters for each outlet to provide hot water.

Automatic (computer programmed), daily, flushing of showers.

Ability to dose system with biocide (chlorine dioxide) if required i.e. dosing points built into system.

Please note that:
This system was based on the previous system designed for the BMTU built in GRI in 1998/99 which was designed with input from Dr Tom Makin (legionella expert from Liverpool), Gordon Cheape (Senior Engineer, GRI) and myself with our experience of controlling legionella in the GRI Old Building cold water supply with chlorine dioxide, from 1992, with Tom Makin's research into point of use instantaneous water heaters in legionella control. Please note that GRI had a significant problem with the presence of legionella (Lp1) in the cold water system with cases in the late 1980's and early 1990's with a death in a BMTU patient in 1990.
The GRI system had a memcor filter, fibreglass storage tank, circulating cold chilled water at 12°C and point of use instantaneous water heaters AND dosed with 0.5ppm chlorine dioxide.
After careful discussion with Tom Makin and Dr John Lee of HPA now PHE (world expert in legionella control in water systems) we decided that the control measures in the Beatson were probably sufficient without the addition of a biocide but we embarked on routine legionella water testing after commisioning. In the 7 years since, no legionella problem has been found in the top floor (BMTU) of the Beatson (nor for that matter in the domestic hot and cold systems that are present in the other floors below).

FW: BMT

Inkster Teresa (NHS GREATER GLASGOW & CLYDE)

Wed 11/11/2015 11:46

To: brian.jones[redacted] [redacted] John.Hood@[redacted]

See below. I am becoming increasingly frustrated. There is actually little point to tomorrows meeting as we are back at the beginning again with this . Will be interested to see Garys response.

Kind Regards
Teresa

Dr Teresa Inkster
Consultant Microbiologist and Infection Control Doctor
Dept of Microbiology
Queen Elizabeth University Hospital
Glasgow
[redacted]

From: Williams, Craig [Craig.William[redacted]
Sent: 11 November 2015 11:46
To: Inkster Teresa (NHS GREATER GLASGOW & CLYDE); Jenkins Gary (NHS GREATER GLASGOW & CLYDE)
Subject: Re: BMT

Dear Teresa

Gary may have the documents that you are looking for. I have copied him in to the reply. There has been no discussion with HPS as it was thought that HFS was the appropriate body and estates colleaugues would contact them as appropriate. The role of HFS in the absence of clear national guidance could probably be discussed at the meeting.

Best wishes

Craig

Sent from my BlackBerry 10 smartphone on the EE network.

From: Inkster Teresa (NHS GREATER GLASGOW & CLYDE)
Sent: Tuesday, 10 November 2015 4:41 PM
To: Williams, Craig
Cc: Jones, Brian; Hood, John
Subject: BMT

Dear Craig,

10/6/2019 FW: BMT - INKSTER, Teresa (NHS GREATER GLASGOW & CLYDE)

I have now had a chance to read through the emails you gave me today.

Regarding the attached email from Peter Hoffman which you gave me today , was a response sent back to the various points that he raised.

I note he refers to involving colleagues in HPS - did this happen and is there any correspondence from them . Are you happy for me to discuss with them if necessary as I am aware Peter has no remit.

It would be useful for me to have these details ahead of Thursdays meeting if possible.

Kind Regards
Teresa

Dr Teresa Inkster
Consultant Microbiologist and Infection Control Doctor
Dept of Microbiology
Queen Elizabeth University Hospital
Glasgow
[redacted]

****

This message may contain confidential information. If you are not the intended recipient please inform the sender that you have received the message in error before deleting it.
Please do not disclose, copy or distribute information in this e-mail or take any action in reliance on its contents: to do so is strictly prohibited and may be unlawful.

Thank you for your co-operation.

NHSmail is the secure email and directory service available for all NHS staff in England and Scotland
NHSmail is approved for exchanging patient data and other sensitive information with NHSmail and GSi recipients
NHSmail provides an email address for your career in the NHS and can be accessed anywhere

****

****
NHSGG&C Disclaimer
The information contained within this e-mail and in any attachment is confidential and may be privileged. If you are not the intended recipient, please destroy this message, delete any copies held on your systems and notify the sender immediately; you should not retain, copy or use this e-mail for any purpose, nor disclose all or any part of its content to any other person.
All messages passing through this gateway are checked for viruses, but we strongly recommend that you check for viruses using your own virus scanner as NHS Greater Glasgow & Clyde will not take responsibility for any damage caused as a result of virus infection.
****

Lang, Ann

From: Joannidis, Pamela
Sent: 01 September 2015 12:02
To: Lang, Ann
Subject: FW: BMT unit new RHSC

From: McNamee, Sandra
Sent: 05 June 2015 09:47
To: Mitchell, Clare; Joannidis, Pamela
Subject: FW: BMT unit new RHSC

FYI

Sandra McNamee
Associate Nurse Director
Infection Prevention & Control
[redacted]

From: Williams, Craig
Sent: 05 June 2015 09:44
To: Armstrong, Jennifer
Cc: McNamee, Sandra; Walsh, Tom
Subject: BMT unit new RHSC

Dear Jennifer

Further to our discussion:

On the 29th May Clare Mitchell the lead ICN and myself went to do a walkround on ward 2a in the New RHSC to determine the best points for air sampling which we planned to undertake prior to the move of the paediatric BMT unit. On arrival at the unit we found that there were some holes in the walls of the BMT cubicles and the ventilation had not been switched on.

I met with Mary Anne Kane who said she would look into it, the project team were confident that the work could be undertaken over the next week to allow the unit to be cleaned and air sampling performed today.

Upon further investigating Mary Anne found that the HEPA filters had not been fitted. If this is the case then we will be unable to validate the rooms.

From an infection control point of view it would be potentially unsafe to move children from their current HEPA filtered rooms to rooms in the new hospital until we can provide appropriate facilities.

Craig

Prof Craig Williams
Consultant Microbiologist Royal Hospital for Sick Children, Glasgow
Lead Infection Control Doctor, NHSGGC

FW: Isolation rooms, MDU and Renal Dialysis

McNamee, Sandra [redacted]

Fri 20/05/2016 09:15

To:Inkster Teresa (NHS GREATER GLASGOW & CLYDE) [redacted]

Sandra McNamee
Associate Nurse Director
Infection Prevention & Control
[redacted]

From: Griffin, Heather
Sent: 25 May 2009 17:23
To: Seabourne, Alan; Moir, Peter; Cowan, Brian
Cc: Walsh, Tom; McNamee, Sandra; Gallacher, Stephen
Subject: FW: Isolation rooms, MDU and Renal Dialysis

Dear All,

For information - A meeting took place with Tom Walsh, Anette Rankin and Pamela Joannidis to review and finalise the infection control advice for the requirement for isolation rooms in the New South Glasgow Hospital. The outcome is shown below.

1) Isolation rooms for the New South Glasgow Hospital are as follows:

Haemato-oncology -
Sealed ward with hepa filtration positive to the rest of the hospital

Respiratory (serving rest of medical)

3 negative pressure sealed rooms (without ante rooms)

NB post meeting note - Clinicians in Gastro and rheumatology do not feel that they need any isolation rooms, think the 3 in respiratory is plenty)

Renal inpatient wards
2 positively pressure sealed rooms with negatively pressured anti- room

A&E
2 negative pressure sealed rooms (without anti-rooms)

Critical Care (includes ICU/Surgical and medical HDU)

10 isolation rooms with anti-rooms - as per user request.

(NB - No isolation rooms required for CCU , surgical or Acute Assessment Unit)

A49618520

Other issues agreed were -

Medical Day Unit

Glass partitions between patients is not required (require 3.6m separation)

Renal Dialysis

The 30 station unit (for outpatients) will be split as follows - 6 single rooms and 3 open rooms of 8 patients (no glass partitions required)

Please let me know if there are any issues/comments .
Many Thanks
Heather

****
NHSGG&C Disclaimer

The information contained within this e-mail and in any attachment is confidential and may be privileged. If you are not the intended recipient, please destroy this message, delete any copies held on your systems and notify the sender immediately; you should not retain, copy or use this e-mail for any purpose, nor disclose all or any part of its content to any other person.

All messages passing through this gateway are checked for viruses, but we strongly recommend that you check for viruses using your own virus scanner as NHS Greater Glasgow & Clyde will not take responsibility for any damage caused as a result of virus infection.

****

In-Patient Adult Haematopoietic Stem Cell Transplant Service

We are concerned about the lack of definitive plan and date for the return of the service to the QEUH. The effort required by all members of the BMT service and BWOSCC High acuity team to maintain a safe service on the GGH is immense. The ongoing requirement for frequent transfers of patients to the QEUH is detrimental to our patients well being and compromising the service we provide. It is now nearly a year since we returned to the BWOSCC and no definitive plan is impacting on staff morale.

Background

The adult haemopoietic stem cell transplant service moved to the QEUH in May 2015, because of concerns that the planned level of support for acutely unwell patients on the GGH site would be insufficient to support such a high intensity speciality, particularly out of hours, and would not meet the JACIE accreditation standards. The level of high intensity support provided at GGH prior to May 2105 was already far from ideal and any reduction would make it extremely difficult to maintain a safe service for patients. It was known in May 2013, at the time of the decision to move the BMTU to the new unit at the QEUH, that the corridor would not be HEPA filtered, but it was expected that the rooms provided would be of an acceptable standard for highly immunocompromised patients with appropriate HEPA filtration, room pressures and air exchange rates. Given the frequent requirement for support from HDU, ICU and other acute specialities it was agreed that this need should be prioritised when balanced against the lack of HEPA filtration in the corridor.
Unfortunately, the unit had to return to the Beatson, West of Scotland Cancer Centre in July 2015 because of the identification of extremely poor air quality in the new transplant unit. This return was predicated on it being short-term with remedial works to improve the air quality in ward 4B, QEUH to acceptable levels. The BMT team agreed to work closely with the BWOSCC high acuity and QEUH teams to minimise the risk to critically unwell patients whilst at the BWOSCC.

Remedial Works Required

The GGC Infection control lead, Dr T Inkster, asked advice from Health Protection Scotland about the changes required to ward 4B to establish the current standards for highly immuncompromised patients review how they could be met. HPS in their document (SBAR_BMT_NHSGGC_PDF_version 52) detail what these should be. Some work has already been done and plans have been drawn up to achieve virtually all the other requirements. A feasibility analysis has been carried out and remedial action outlined which will improve the air quality in ward 4B, QEUH. However, this is still below the specifications set out in the HPS document. The major issues are

- Frequency of air exchange is below the recommended 10/hour
- The corridor is not directly HEPA filtered although all air entering will be

It should be noted that in the above document HPS the state that *"Ideally the corridor should also be HEPA filter supplied, however, this is normally only achieved in a purpose built unit and is less important if the rooms are appropriately ventilated and achieve positive pressure in comparison to the corridor."*

Risks of Suboptimal Air Handling

The main risk poor air quality poses to patients is significant invasive fungal infection. It is impossible to quantify if there will be an increased risk incurred by moving back to the QEUH compared with the current provision at BWoSCC once the planned upgrade in air handling provision has been completed, given that there will be suboptimal air exchanges and no direct HEPA filtration of the corridor. Until the proposed changes have been made we cannot do settle plates or particle counts to look for fungal colonies. However, we can to reduce the risk of invasive fungal infection by using well tolerated and effective anti fungal prophylaxis such as posaconazole. With the measures that have been taken already, and further measures that are being planned, the air quality is almost certainly going to be adequate, albeit the specification does not fully meet HPS requirements.

Risks of Remaining at the BWoSCC

The failure to completely meet the HPS standards at QEUH needs to be balanced against the following which are incurred whilst we remain at the QEUH

- Lack of HDU/ITU at BWoSCC
    - Requirement for early transfer to QEUH to reduce risk of critically unwell patient at BWOSCC site. This means patients are being transferred to the QEUH who would normally be managed on the ward.
    - Exposure to an unprotected environment during transfer
    - Potential for significant compromise in outcome due to lack of rapid access to these staff and facilities.
- On-going concern about ensuring optimal care for patients who have been transferred from the BWOSCC transplant unit to the QEUH due to lack of on site nursing, pharmacy and AHP expertise.
- Significant psychological effects on patients moved to QEUH, who require to remain there for long periods of time, due to concerns about general stability of condition, but who could be managed in the BMTU if onsite at the QEUH
- Difficulty in obtaining medical and surgical opinions at BWOSCC, particularly OOH. Patients require transfer to QEUH.
- Lack of beds at the BWOSCC delaying admissions and increasing risk of disease progression
- Single Air handling plant at the BWoSCC which cannot be serviced and has failed several times in the last few months

We feel that the current proposals will ensure an adequate solution in the short to medium term. Further delay to assess the feasibility of providing increased air exchanges to the rooms and HEPA filtration of the corridor will delay our return to QEUH by a minimum of 8 weeks just to assess feasibility and the cost is likely to be exorbitant assuming there is a solution, which is not at all certain. Even if this work is performed, the current facility will not meet HPS standards and it is not clear if it will provide any meaningful clinical benefit. Meanwhile we continue to provide a suboptimal service to our patients with no realistic return date to the QEUH.

The current haemato-oncology in patient configuration with 2 sites is not sustainable in the long term and the Beatson site does not meet haemato-oncology standards due to lack of renal and ITU on site. The in patient service needs to be consolidated on a single site to allow maximum efficiency and effectiveness in staff utilisation such as nursing, pharmacy and junior doctors. In addition new therapies such as CAR-T cells and some antibodies are unsuitable to be given on sites without ITU facilities. We would suggest that the best solution would be to complete the current planned programme of work as soon as possible, but with the aim of developing a longer term business plan for a single site haemato-oncology unit, which would meet the latest HPS standards and allow the development of new ways of working with increased use of day case and hotel accommodation to support haemato-oncology patients for Glasgow/West of Scotland and transplant for the whole of Scotland.

Anne Parker
Grant McQuaker
David Irvine
Igor Novitzky-Basso
Andrew Clark

Glasgow
Direct dial : [redacted]

From: Loudon, David [redacted]
Sent: 16 June 2016 09:36
To: Mccolgan Melanie (NHS GREATER GLASGOW & CLYDE); Armstrong Jennifer (NHS GREATER GLASGOW & CLYDE)
Cc: Parker, Anne; Inkster Teresa (NHS GREATER GLASGOW & CLYDE); Jenkins Gary (NHS GREATER GLASGOW & CLYDE)
Subject: RE:

Melanie,

I don't think that the content of your document is completely an accurate reflection of events leading to the current status of Ward 4B at the QEUH.

Firstly, the hospital was not designed for BMT as this was not part of the clinical brief for the project so, there is no complete failure. Around March/ April 2013 the Project Team were requested to extend the number haemato –oncology rooms to the same specification as the rooms already included in the project. This variation cost c£900K

I would note that the ICT lead in place at the time of the most recent alterations to Ward 4B was in the process of signing the works but owing to a change in personnel, this did not occur.

I would also suggest that your note to the HPS, confirms that the Board has already undertaken a feasibility study to ascertain if the comprehensive specification agreed with ICT was deliverable and concluded that it is not. The costs of this open in nearer to £4-5M.

I would also suggest that if the CEO is prepared to fund the second option (£1M) assuming that the proposed specification is clinically signed off by all then, he would anticipate that it is not a shot term solution.

Happy to discuss

Regards

David

David W. Loudon, MCIOB, CBIFM, MBA
Director of Facilities and Capital Planning
NHS Greater Glasgow & Clyde
Corporate Headquarters
JB Russell House
Gartnavel Royal Hospital
Glasgow
G12 0XH

[redacted]

From: McColgan, Melanie
Sent: 15 June 2016 17:15
To: Armstrong, Jennifer
Cc: Parker, Anne; Inkster, Teresa (NHSmail); Loudon, David; Jenkins, Gary
Subject:

Dear Jennifer
Please see attached following our meeting last Tuesday. Our one outstanding action is our engagement with HPS. I have spoken with Peter Croan of NSD today who will engage with Mike Winter and HPS team and get back to me. He appreciates time is of the essence!
Regards
Melanie

****
NHSGG&C Disclaimer
The information contained within this e-mail and in any attachment is confidential and may be privileged. If you are not the intended recipient, please destroy this message, delete any copies held on your systems and notify the sender immediately; you should not retain, copy or use this e-mail for any purpose, nor disclose all or any part of its content to any other person.
All messages passing through this gateway are checked for viruses, but we strongly recommend that you check for viruses using your own virus scanner as NHS Greater Glasgow & Clyde will not take responsibility for any damage caused as a result of virus infection.
****

RE:

Inkster Teresa (NHS GREATER GLASGOW & CLYDE)

Thu 16/06/2016 15:07

To:Loudon, David [redacted]; Mccolgan Melanie (NHS GREATER GLASGOW & CLYDE [redacted] Armstrong Jennifer (NHS GREATER GLASGOW & CLYDE) [redacted]

Cc:Parker, Anne [redacted] Jenkins Gary (NHS GREATER GLASGOW & CLYDE) [redacted]; Walsh Thomas (NHS GREATER GLASGOW & CLYDE) [redacted] Mcnamee Sandra (NHS GREATER GLASGOW & CLYDE) [redacted]

Importance: High

Hi all ,

We discussed this document at our Infection Control SMT this morning.

It is very difficult for the ICT to give assurances of a safe environment.

The benchmarking table is a concern. The crucial elements of the design are the first 5 columns - HEPA rooms, HEPA corridor , pressure, air changes and sealed rooms. Even with the modifications we only meet 2 of the 5 . The other units apart from Nottingham have 4 or 5 . Units that don't have a HEPA corridor do have 10 PA and ACH of 10 .

We appreciate the risks associated with the lack of ICU on site however after the proposed modifications our spec , of those tabled , is the least compliant with guidance. Whilst this might be ok in the short term the anticipated shelf life of this unit is ~20 years. .

We would welcome the opinion of NSD/HPS on this matter before ICT sign off

Kind Regards
Teresa

Dr Teresa Inkster
Lead Infection Control Doctor NHSGGC
Training Programme Director Medical Microbiology
Dept of Microbiology
Queen Elizabeth University Hospital

Timetable of events in relation to adult BMT unit – Dr T Inkster

25th June	Prof Williams had asked me to cover his annual leave so I attended a meeting as acting lead ICD at the request of the site ICD (Dr Peters). This was at QEUH with estates and engineers for an update on specialist ventilated areas on the site. We were told at the meeting that BMT patients had moved to QEUH from Beatson.
June 29th	Gap analysis of new unit spec vs Beatson spec , SHTM 03-01 and CDC guidance (prepared and circulated by Dr C Peters) • Corridor not HEPA filtered • Air changes per hour – no info • Positive pressure in rooms – no info • Ceilings in bedrooms and bathrooms not sealed. • No visual pressure indicators on rooms • No alarm system for pressure failure In addition fungus grown on air testing .
3rd July	Meeting with clinical colleagues , estates and managers . Recommendation was to move BMT patients back to Beatson in order for concerns re spec to be addressed. Prof Williams returned from annual leave and then took over.
29th October	Email from Prof Williams requesting attendance at a meeting to discuss transfer of BMT patients back to QEUH as I was Regional ICD by this point.
12th November	Meeting held with clinical colleagues regarding move back to QEUH. No specification available at the meeting , no confirmation of infection control sign off. Validation reports issued at the meeting. On review of available info; Initial specification for the unit in 2009 written by Dr Hood was for a haemato-oncology ward with no BMT patients . Change order submitted in 2013 for a BMT unit – no apparent upgrade of specification. Remedial spec from July 2015 not compliant with guidance available in 2013 – SHTM - 0301. Not all points highlighted in gap analysis had been addressed i.e. HEPA filtration, air changes, pressures and sealing of bathrooms.

	At this point I requested support from HPS in order to officially involved Dr Peter Hoffman, PHE who had been involved in email discussions with Prof Williams .
4th December	SBAR received from HPS with recommendations based on HTM 0301, input from Health Facilities Scotland and Dr Peter Hoffman . Key points : ▪ Rooms must be positively pressurised at 10PA ▪ All air entering the rooms must be HEPA filtered ▪ Rooms must be completely sealed including bathrooms ▪ Air changes of 10 ACH in each room
19th January	Meeting chaired by Dr David Stewart with estates colleagues and Dr Anne Cruickshank to look at feasibility of HPS recommendations. Recommendations for 10 ACH and 10 PA in bedrooms were acknowledged as unachievable. Alternative proposed by myself was HEPA filtration of the corridor air and sealing of the bathrooms. If achievable a reduction in the recommended air pressure and air changes could be accepted. Feasability study planned to look at this option.

Lang, Ann

From: Joannidis, Pamela
Sent: 01 September 2015 11:11
To: Lang, Ann
Subject: FW:

From: McCluskey, Fiona
Sent: 03 July 2014 10:02
To: Joannidis, Pamela
Subject: RE:

Hi Pamela

ee below information on lobbied isolation rooms

NCH	Observation ward	2no.
	PICU	4no.
	Cardiology	2no.
	ARU	2no.
	Schiehallion	8no.
	General wards	6no.
NSGH	Critical Care	10no.
	Renal (higher acuity)	2no.
	Haemato-oncology (HEPA filtration – not lobbied)	24no.

Regards

Fiona

Fiona McCluskey
Senior Nurse Advisor
New South Hospitals Project
Top Floor
Construction Offices
(off Hardgate Road)
Southern General Hospital
Glasgow G51 4SX
[redacted]

From: Joannidis, Pamela [redacted]
Sent: 03 July 2014 09:25
To: McCluskey, Fiona

Thanks Fiona

Could you let us know Is it definite that the BMT from Beatson and the Brownlee wards are moving in to the new SGH?

Could you also let me know how many lobbied single rooms we have in the adult hospital again please?

kind regards

Nurse Consultant, Infection Prevention and Control

NHS Greater Glasgow and Clyde

[redacted]

Pamela.joannidis[redacted]

From: McCluskey, Fiona
Sent: 03 July 2014 09:15
To: Joannidis, Pamela
Subject: RE:

Pamela

Grant Archibald chairs the IP Steering Group
Anne Harkness chairs the Emergency Flows Steering Group

Kind Regards

Fiona

Fiona McCluskey
Senior Nurse Advisor
New South Hospitals Project
Top Floor
Construction Offices
(off Hardgate Road)
Southern General Hospital
Glasgow G51 4SX
[redacted]

From: Joannidis, Pamela [redacted]
Sent: 03 July 2014 08:29

Hi Fiona

Thank for this. Can you send me the names of the chairs of both please?

kind regards

Nurse Consultant, Infection Prevention and Control
NHS Greater Glasgow and Clyde
[redacted]
Pamela.joannidis[redacted]

From: McCluskey, Fiona
Sent: 01 July 2014 15:50
To: Joannidis, Pamela
Subject:

Hi Pamela

Re: the process and protocols for patients requiring isolation..

Perhaps this is something that you would wish to take to the OTM Inpatient Flows Steering Group and the Emergency Flows Steering Group.

Kind Regards

Fiona

Fiona McCluskey
Senior Nurse Advisor
New South Hospitals Project
Top Floor
Construction Offices
(off Hardgate Road)
Southern General Hospital
Glasgow G51 4SX
[redacted]

Lang, Ann

From: Joannidis, Pamela
Sent: 01 September 2015 11:11
To: Lang, Ann
Subject: FW:

From: McCluskey, Fiona
Sent: 03 July 2014 10:55
To: Joannidis, Pamela
Cc: Gallacher, Stephen; Griffin, Heather; Loudon, David
Subject: RE:

Hi Pamela

During the planning stage there were several meetings with Infection Control to agree and sign off the number of lobbied rooms required for the hospitals.

The transfer of the BMT was approved by Jane Grant late 2013 and the ward design was amended to incorporate this change.

The move of the Brownlee is a fairly recent decision made by ECMS Directorate. The Brownlee and was not considered as an option during the planning stage and Business Case. Therefore there are no plans to provide extra lobbied accommodation within the generic wards. The hospital tower is now built and ward areas completed or near completion.

It is important to note that any change to the tower design would have an significant impact on the hospital design, the contract and the final bed model for NHSGG&C and would need to be agreed by Robert Calderwood via the formal change process.

Kind Regards

Fiona

Fiona McCluskey
Senior Nurse Advisor
New South Hospitals Project
Top Floor
Construction Offices
(off Hardgate Road)
Southern General Hospital
Glasgow G51 4SX
[redacted]

From: Joannidis, Pamela [redacted]
Sent: 03 July 2014 09:33
To: McCluskey, Fiona

Hi Fiona

Jackie has just updated me with the information re Brownlee and BMT. Can we ask if extra provision has been considered for these patients in the generic wards if they require lobbied accommodation?

kind regards

Nurse Consultant, Infection Prevention and Control
NHS Greater Glasgow and Clyde
[redacted]
Pamela.joannidis[redacted]

NHS Greater Glasgow and Clyde	**NHS Greater Glasgow & Clyde** **Infection Prevention and Control Team**
Purpose:	Update Paper /Timeline
From:	IPCT NHSGGC
To:	Dr J Armstrong – Board Medical Director
Date:	26th April 2016
Subject/ situation:	Timeline re:correspondence regarding the move of the ID unit to the QEUH
Background:	This is a summary of the timeline of decisions made and issues raised (that the IPCT were aware of) with regard to the move of the ID Unit from GGH to the QEUH. **11th August 2014** (Fiona McCluskey(FMcC)to S McNamee (SM)) Summary Some issues had been raised by the Lead Nurse for ID regarding the proposed move specifically in relation to the flow of patients into the unit and the use of the pneumatic tube system – FMcC contacted SM for advice. SM pointed out that IPC advice on this move had not been obtained (late decision) and that she had significant concerns regarding the management of highly infectious patients in the proposed area. FMcC advised SM that this was not a project decision and that there were no lobbied rooms within the tower and that the only lobbied rooms were in ITU/HDU Craig Williams (CW) then contacted FMcC to support SM concerns regarding the move and to ask for a meeting to discuss. Ann Harkness (AH) was on annual leave but Joyce Brown was cc in and responded to say that this issue was being discussed at the ECMS SMT meeting on the 13th August. CW responded directly to Joyce "One of my concerns is the total number of lobbied isolation rooms available within the NSGH. The addition of the adult bone marrow transplant unit and the brownlee to the specialties on site will increase this" **15th August 2014 (AH to CW)** AH responded to CW: "happy to meet at your convenience with one of the ID team. They are content with access to 2 dedicated isolation rooms within the medical HDU cluster and we are agreeing protocols for access to others if necessary with our critical care colleagues - we agreed this before we made the decision to move them as it was clearly a deal breaker for the clinicians if it had not been possible." ..."The sgh ED has a decontamination area that we could use as necessary but in reality most people will come via ED / IAU as at present and we take no special precautions other than in very

	few cases" SM responded "I confess I don't have major concerns regarding the pathway through the building, we can put controls in to manage this; my concern is about the co-location of these patients with our most vulnerable. I will wait and see what Craig come back with but I guess if the ID physicians have signed this off they must think the risk to others in critical care is low". **BICC Minutes 6th October 2014** Dr Seaton commented that the adult Infectious Diseases Unit was late in the planning of being moved to the new hospital. He said the high isolation rooms will be on different floors from where other patients will be based. He is concerned that because of this the nursing expertise will not be aligned to beds where patients will be and will be nursed by a different cohort of nurses. Joyce Brown replied that she is looking into this. Dr Seaton asked Fiona if there was any chance the IDU beds could be co-located but Professor Williams said there would need to be a massive airflow change for this to happen. Dr Armstrong asked if maybe IDU should stay at Gartnavel but Dr Seaton said this would be inadequate for managing the patients. With regards to the MDRTB Regulations Professor Williams said that the technical team are looking at the ITU wards and asked Fiona if there had been any update. Fiona agreed to contact Brookfield. **BICC December 2014** Professor Williams commented that in relation to the new build update at the last meeting from Fiona McCluskey he has still not received word regarding the issue with transplant patients and if a contingency plan is in place with regard to the MDRTB Regulations Dr Armstrong suggested writing a letter to David Louden asking for an update on these issues and Professor Williams agreed to do this. Letter sent 22 December 2014 asking the following questions re NSGH: 1. Whether the lobbied side rooms meet the current guidance for housing bone marrow transplant patients. 2. Whether the lobbied side rooms meet the DH guidance for housing Multi- Drug resistant TB patients. Response was by e mail on the 5th January 2015 (Colin Grindlay Brookfield to David Hall Director Curry and Brown) "Please see attached correspondence from Wallace Whittle advising the isolation rooms throughout the hospital have been designed in line with SHPN 04 supplement 1. Wallace Whittle sees no reason as to why the isolation rooms cannot be used under the

guidance issued previously by NHS"

David Hall then e mails David Louden(DL) and DL forwards to CW

The message from David Hall is as follows:

"I tasked Brookfield and their design team with reviewing the guidance document The prevention and Control of TB in the UK with particular reference to ANNEX D Environmental Control – Ventilation. As you will note below then have confirmed that in their professional opinion they see no reason as to why the isolation rooms cannot be used under the guidance as they have been designed in accordance with SHPN 04 supplement 1, attached"

CW replied to David and again and raised his concern regarding the exclusion of ID and BMTU from the guidance docs.

Meeting arranged to discuss by DL.

BICC 26 January 2015

Professor Williams reported that in relation to the MDRTB Regulations the rooms in IDU are compliant.

Looking at the patient pathway from the Emergency Department Professor Williams advised that this was satisfactory. Dr Seaton stated that the ID Physicians commented that if there was a VHF patient the ante room should be adequately sized to deal with this eventuality and required to be assessed. He said as a group the ID Physicians would like to see the beds and ante rooms to be used for these type of patients. Dr Armstrong stressed that the keys for the new hospital were being handed over tomorrow and this would need to be discussed with David Louden as a matter of urgency. She suggested a small group meet after this meeting and she would contact David Louden to see if the ID Physicians would be able to look at this area today.

In the Infectious Diseases Unit Dr Seaton advised that there are only two beds for VHF type of patients and the rest of the unit is for managing all other patients. In the Brownlee he stated that a VHF patient would be admitted via the fire exit.

Dr Kennedy advised that a sub group is commencing to look at VHF type of patients

27th January -2nd February 2015

Andrew Seaton (AS) sent a message to CW asking to confirm the type of ventilation available. If confimed as appropriate AS noted that these rooms "should be appropriate for short term patient management (VHF) before transfer to Royal Free".

Response from CW is as follows: (cc in was David Louden, Ann Harkness, Ian kennedy & SM)

This is broadly what we have been discussing at BICC for the last while. The positive

	pressure ante-room prevents ingress and egress of organisms from the room and can be used for source or protective isolation without the need to flip any switches. The problem has been that in Scottish Health Planning note 04 there is an Exclusion which states "This Supplement does not describe the specialist facilities required in infectious disease units or on wards where severely immuno-compromised patients are nursed. Guidance for these facilities will follow in a further Supplement to SHPN 04.However the planning team and HFS have been unable to locate further definitive guidance. This being the case I asked David Louden and his team to specifically cross reference our lobbied rooms with the DH guidance on rooms for MDRTB. At a meeting last week he confirmed that their view is that the lobbied isolation rooms at the NSGH provide equivalent protection, he will confirm this by e mail. As such I have no concerns about the suitability of the rooms for MDRTB etc. In terms of the Ebola, following your comments at BICC Sandra about the size of the ante-rooms, Iain Kennedy, Sandra and I met with Emma Thompson, who was nominated by the ID physicians to represent them. I explained that we were content that the lobbied side rooms at NSGH are sufficient under the ACDP guidance to manage an Ebola patient prior to transfer to a designated secure unit, but, that they are not sufficient for anything other than short term management, in particular my understanding was that GGC is not planning to act as a referral unit or accept transfers of these patients. If a severely unwell patient requires to be managed in Glasgow the view was that this would constitute a Major Incident and be managed accordingly. She expressed concern about the transfer of patients through the NSGH to the designated room and suggested that an isolator may be required to support the transfer. We agreed that she or other ID physicians would walk the route and take up their concerns through the directorate. I hope this gives you sufficient detail to address your concrens but if there is anything else please let me know. **1st February 2015** AS e mailed CW again "if they are signed off as safe and appropriate then we're all content. Just to check suspected MERS, SARS, Avian Flu etc. Same specification as MDRTB? Presume all ok for paediatric facility as well?" This went to Kevin Hill via AH and Jamie Redfern (GM) followed up on behalf of paediatrics. CW response was as above. **24th April 2015** (Jackie Barmanroy NC IPC on the project e mailed Frances Wrath with the following question about the RHC) I'm looking for your help regarding the following concerns Lynne has raised in regard to the new build - 1. Can we have assurance that the theatre ventilation has been commissioned?

2. Can we have assurance that the dialysis lines/outlets have been commissioned /flushed ?

3. That estates will be responsible for the helix monitors for Schiehallion's BMT rooms?

Response from Frances on the 5th May re the RHC was as follows:

"Sorry I was on leave for most of last week. All areas have been commissioned in line with contract ER's and all legislative requirements. The Board's Estate

s Team have access to all commissioning data and any specific questions are better addressed to them".

15th August 2015

Not clear what triggered this e mail but AH sent e mail to Joyce Brown and AH responded:

SM sent

"i confess i don't have major concerns regarding the pathway through the building, we can put controls in to manage this; my concern is about the co-location of these patients with our most vulnerable. I will wait and see what Craig comes back with but i guess if the ID physicians have signed this off they must think the risk to others in critical care is low.

AH Responded

"happy to meet at your convenience with one of the ID team. They are content with access to 2 dedicated isolation rooms within the medical HDU cluster and we are agreeing protocols for access to others if necessary with our clinical colleagues – we agreed this before we made the decision to move them as it was clearly a deal breaker for the clinicians if it had not been possible. The separate access to the brownlee off the carpark was designed because of the likelihood of admissions out of hours when the main doors were shut – not due to any infection risk.

4th September (AH to ID consultants cc in CW)

Just to confirm that we have had confirmation that the isolation rooms tested in critical care have passed the full range of tests , so there is no longer any need to have to admit elsewhere. The rooms in medical HDU are not tested yet – so patient placement will be in the ICU area until the full test programme is complete. Emma – in terms of your elective day case – that can now be planned for admission

	Ian Powrie to Sandra McNamee 30/09.15 Two rooms meet the agreed commissioning criteria: Isolation Bed 50 (Disc CCW-165) & • Isolation Bed 31 (Disc CCW-078) Both rooms have supply and extract HEPA filtration and meet the agreed air permeability test requirements set out in SHTM 04-01 supplement 1. However I would recommend confirming that Craig agreed that these rooms are suitable for ID patients, at our meeting last week he was still reviewing the status of the CCW rooms to define which rooms would be allocated for ID patients?
Action	None
Recommendation	Note the paper and timeline.

Bundle of documents for Oral hearings commencing from 19 August 2024 in relation to the Queen Elizabeth University Hospital and the Royal Hospital for Children, Glasgow

Bundle 23 – Queen Elizabeth University Hospital and Royal Hospital for Children, Isolation Rooms